## F RELAY LOCATIONS

### [Engine Compartment]

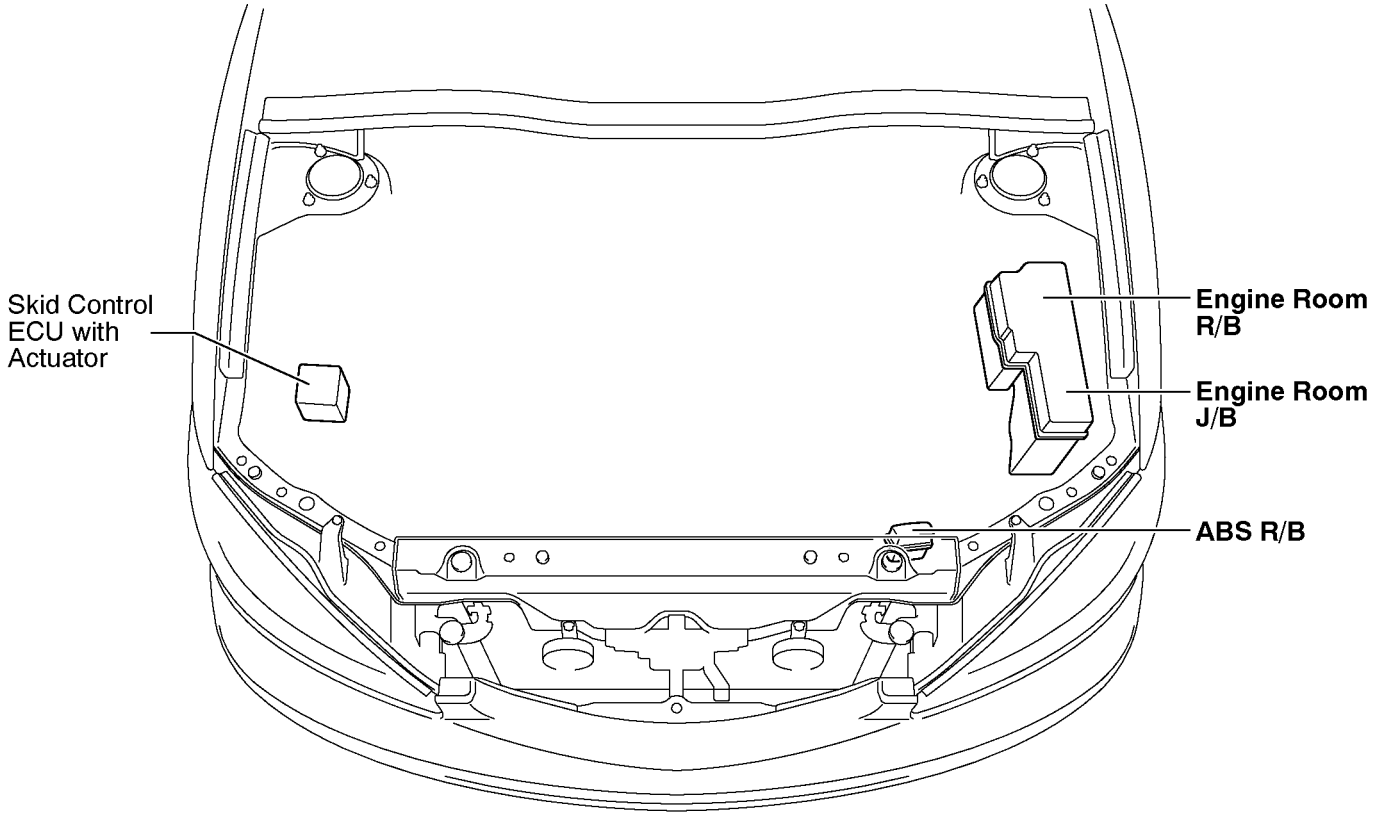


### [Body]

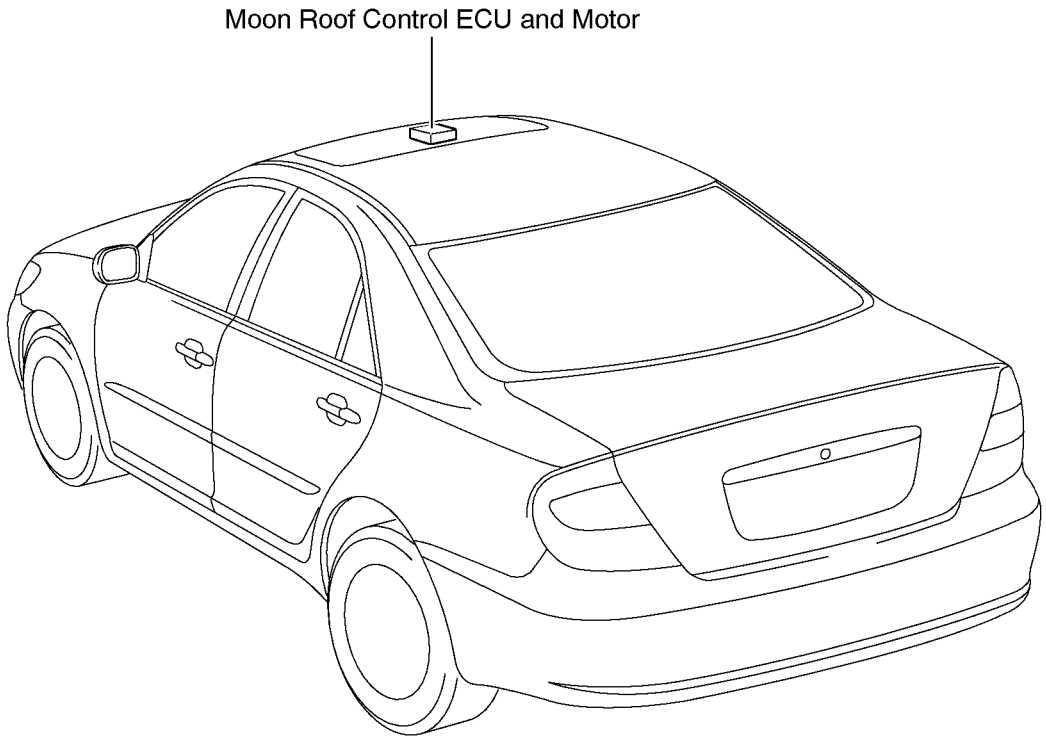

## [Instrument Panel]

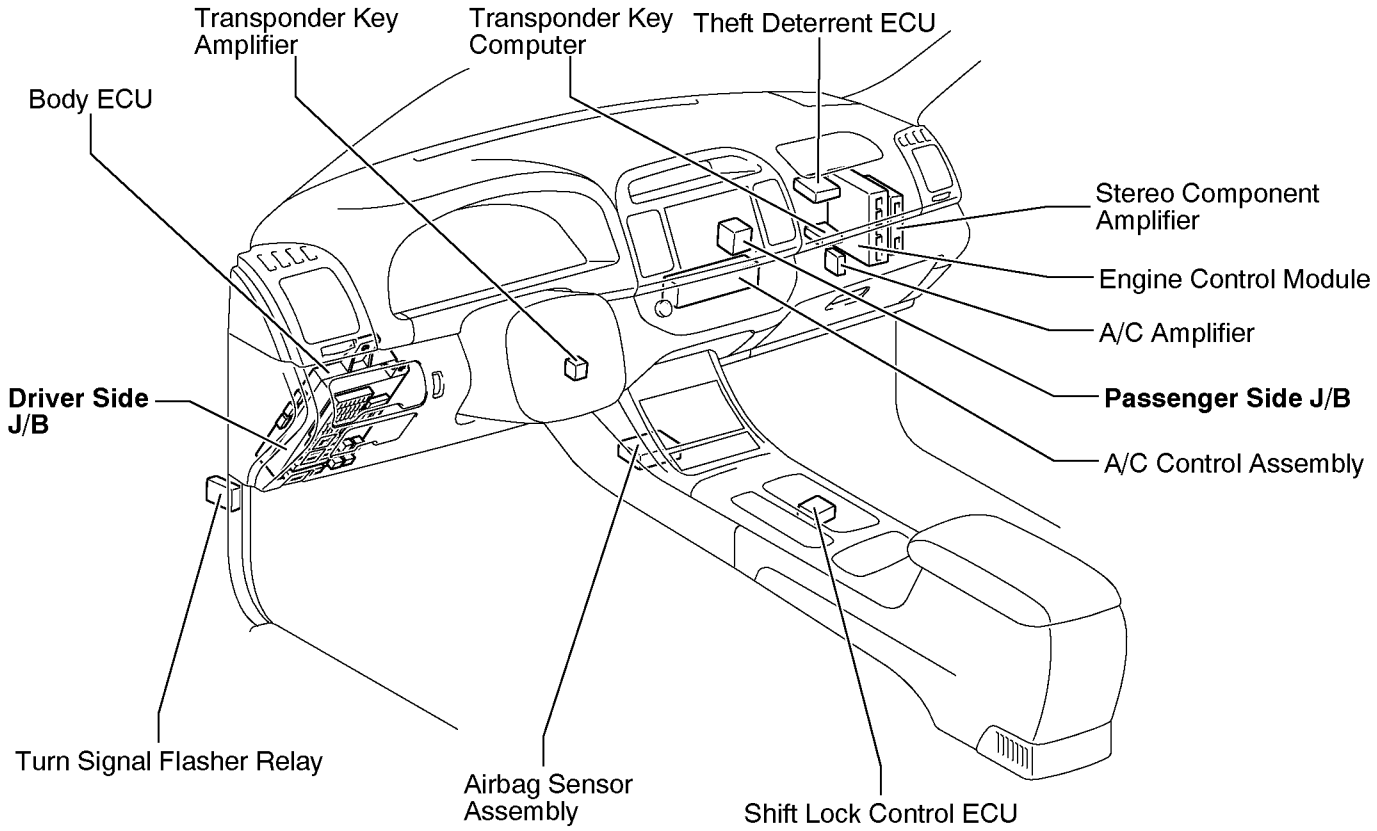


## [Seat]

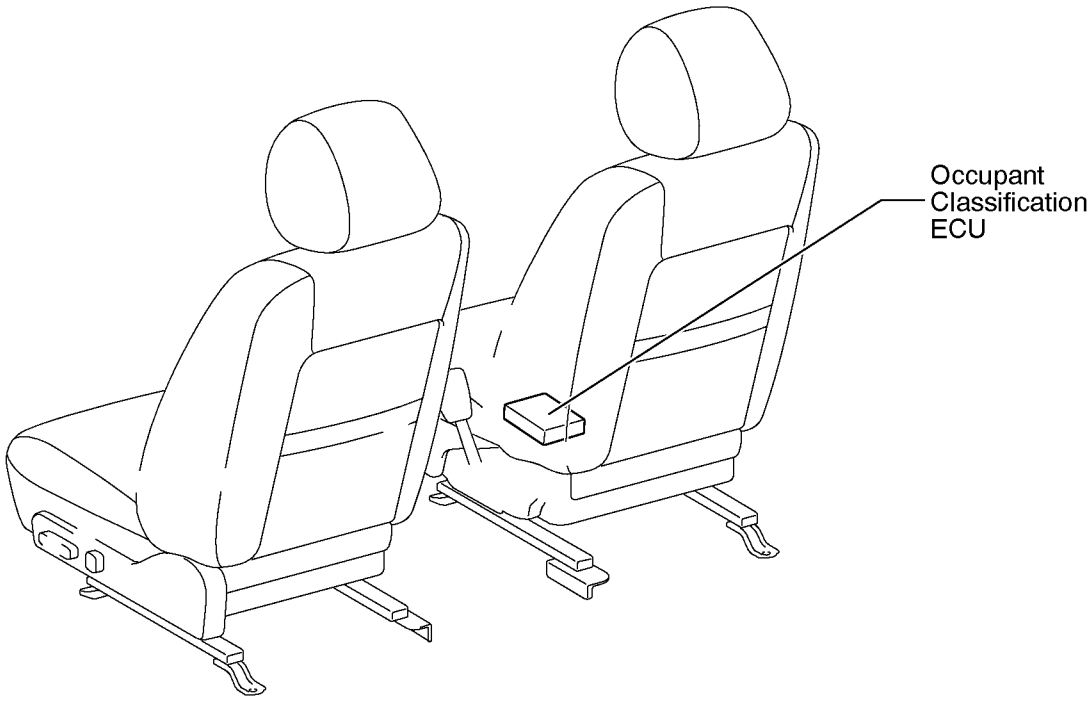

# F RELAY LOCATIONS

| | |
|---|---|
| ① : Engine Room R/B | Engine Compartment Left (See Page 20) |

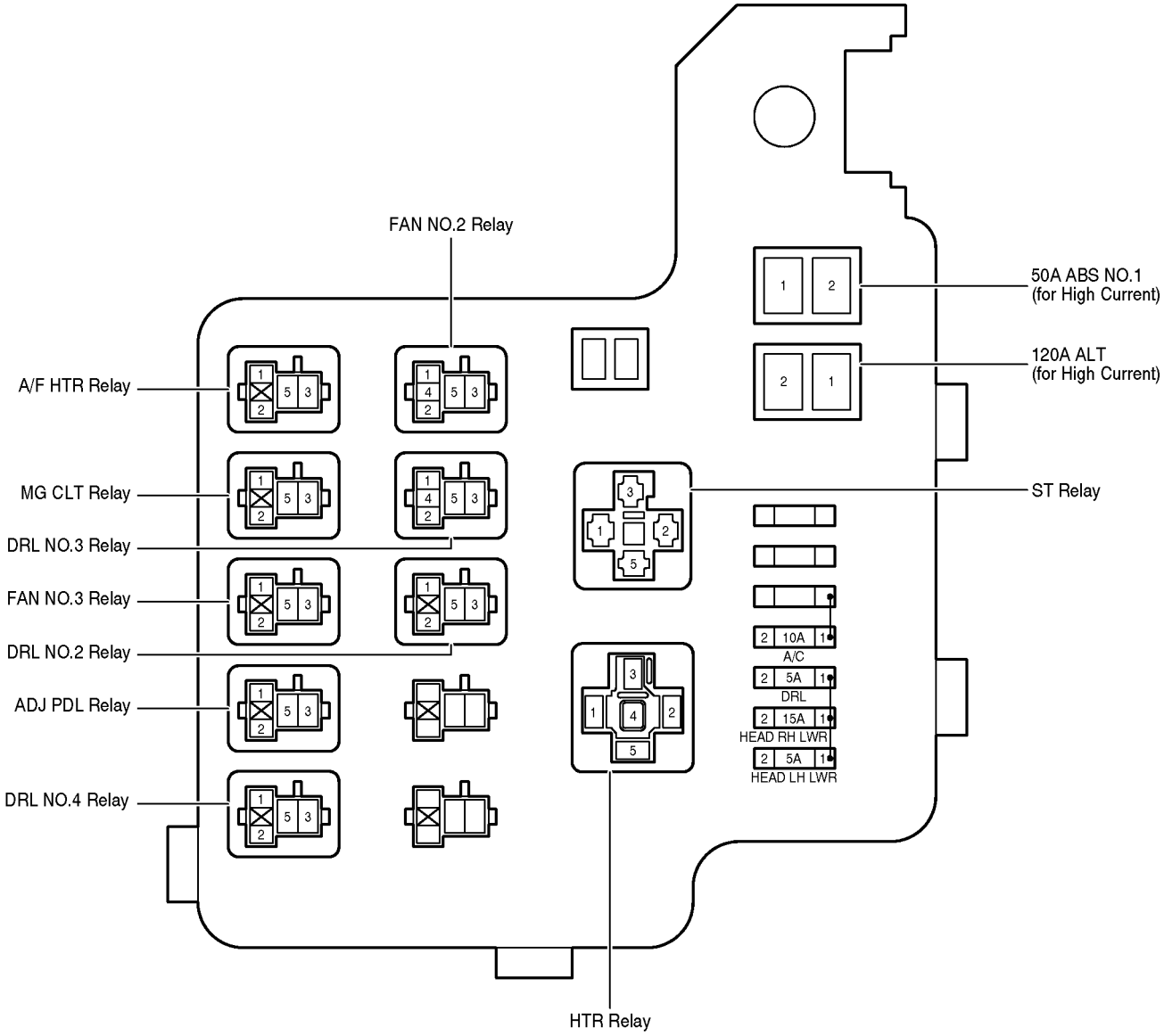

| | |
|---|---|
| ② : ABS R/B | Radiator Side Support LH (See Page 20) |

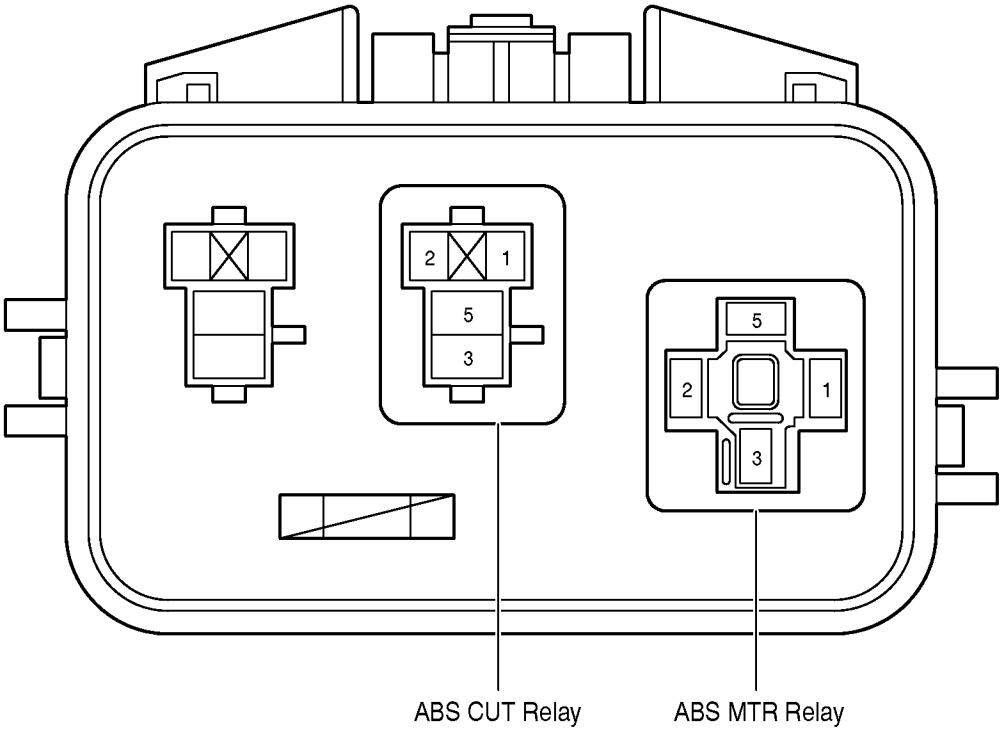

# F RELAY LOCATIONS

| : Engine Room J/B | Engine Compartment Left (See Page 20) |
|---|---|

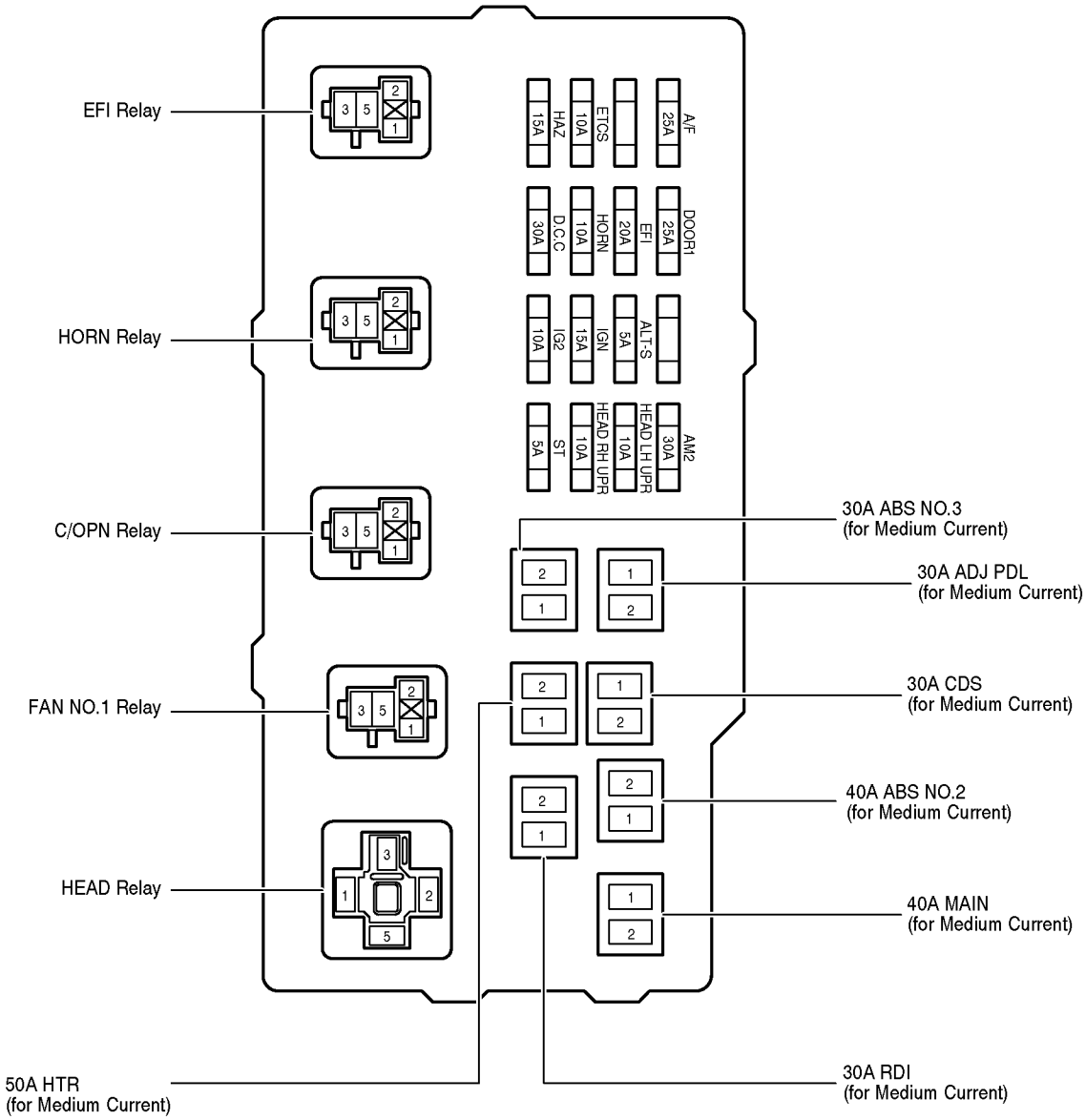

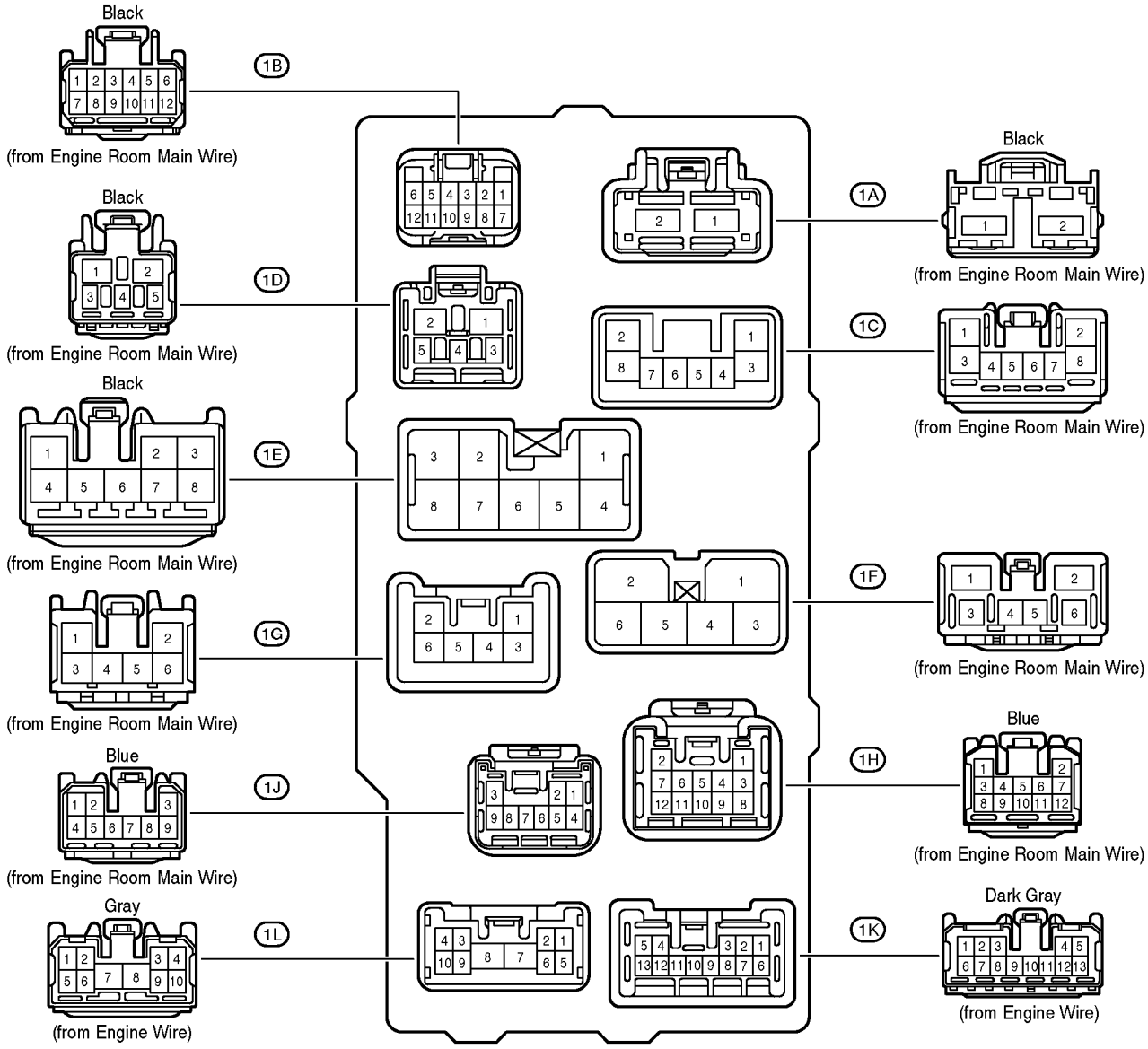
Black
1B
(from Engine Room Main Wire)
Black
1D
(from Engine Room Main Wire)
Black
1E
(from Engine Room Main Wire)
1G
(from Engine Room Main Wire)
Blue
1J
(from Engine Room Main Wire)
Gray
1L
(from Engine Wire)
Black
1A
(from Engine Room Main Wire)
1C
(from Engine Room Main Wire)
1F
(from Engine Room Main Wire)
Blue
1H
(from Engine Room Main Wire)
Dark Gray
1K
(from Engine Wire)

## [Engine Room J/B Inner Circuit]

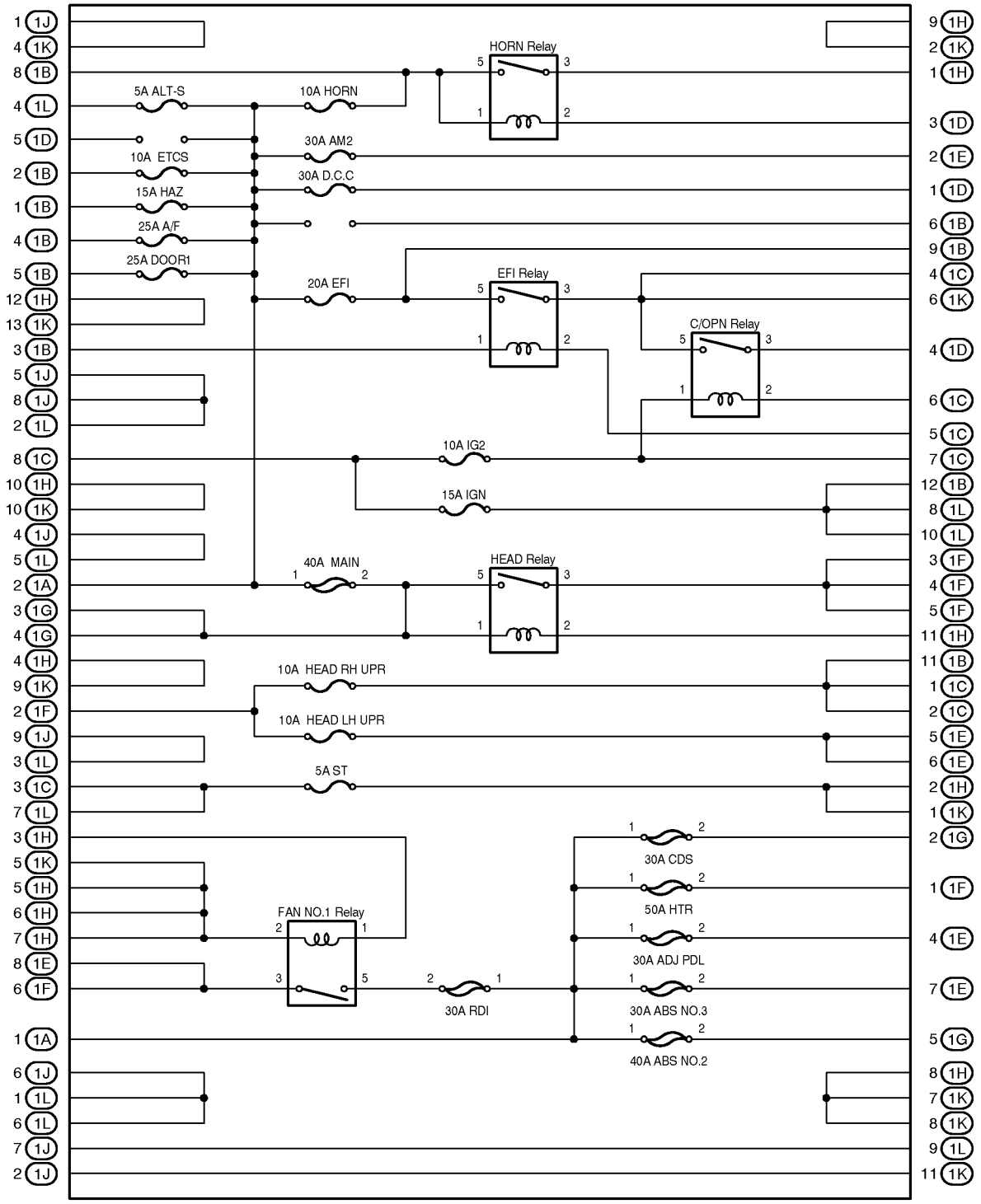

# F RELAY LOCATIONS

| : Driver Side J/B | Lower Finish Panel (See Page 21) |
|---|---|

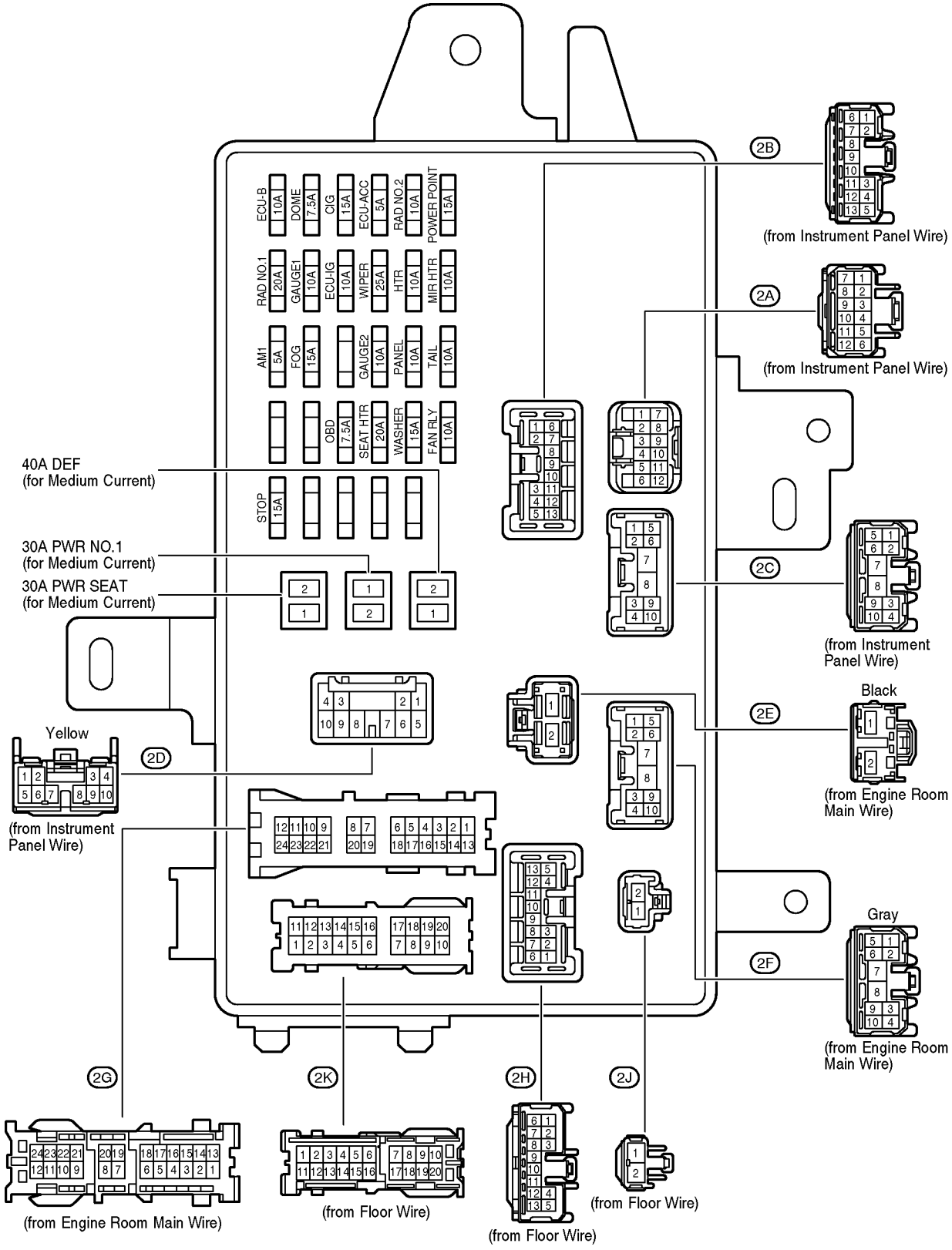

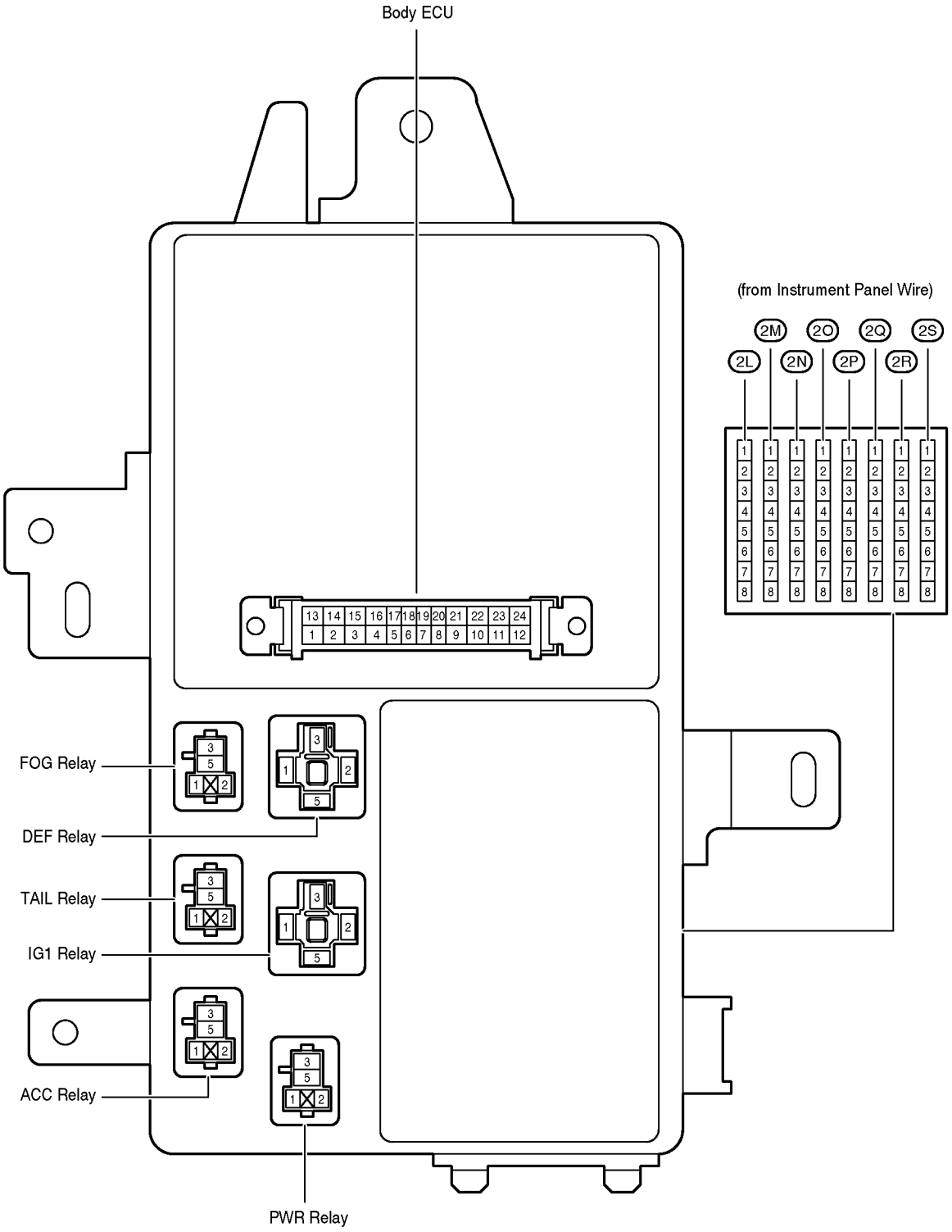
Body ECU
(from Instrument Panel Wire)
2M
2O
2Q
2S
2L
2N
2P
2R
FOG Relay
DEF Relay
TAIL Relay
IG1 Relay
ACC Relay
PWR Relay

## [Driver Side J/B Inner Circuit]

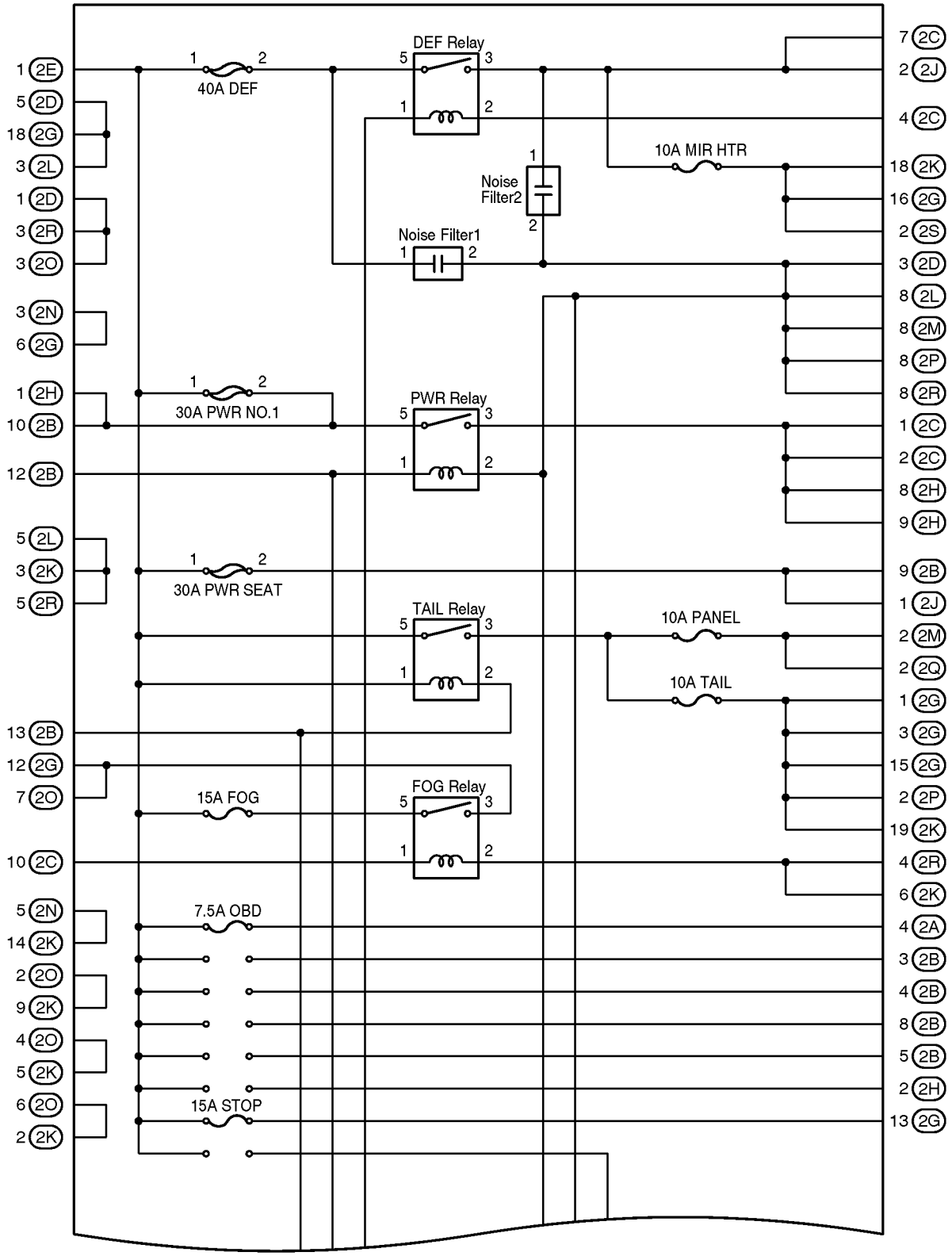


(Cont. next page)

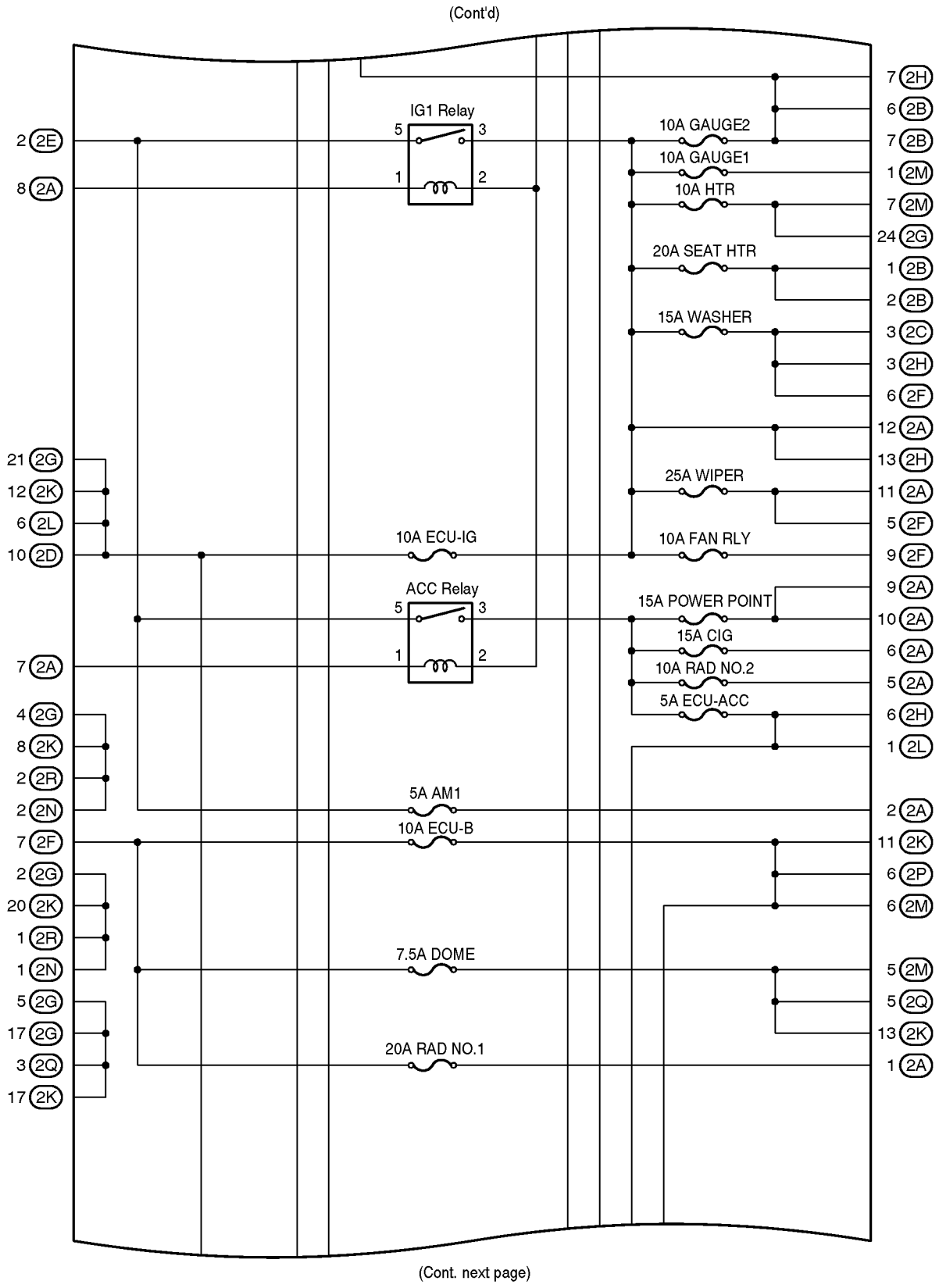
(Cont'd)
IG1 Relay
ACC Relay
2 2E
8 2A
21 2G
12 2K
6 2L
10 2D
7 2A
4 2G
8 2K
2 2R
2 2N
7 2F
2 2G
20 2K
1 2R
1 2N
5 2G
17 2G
3 2Q
17 2K
10A ECU-IG
5A AM1
10A ECU-B
7.5A DOME
20A RAD NO.1
10A GAUGE2
10A GAUGE1
10A HTR
20A SEAT HTR
15A WASHER
25A WIPER
10A FAN RLY
15A POWER POINT
15A CIG
10A RAD NO.2
5A ECU-ACC
7 2H
6 2B
7 2B
1 2M
7 2M
24 2G
1 2B
2 2B
3 2C
3 2H
6 2F
12 2A
13 2H
11 2A
5 2F
9 2F
9 2A
10 2A
6 2A
5 2A
6 2H
1 2L
2 2A
11 2K
6 2P
6 2M
5 2M
5 2Q
13 2K
1 2A
(Cont. next page)

## [Driver Side J/B Inner Circuit]

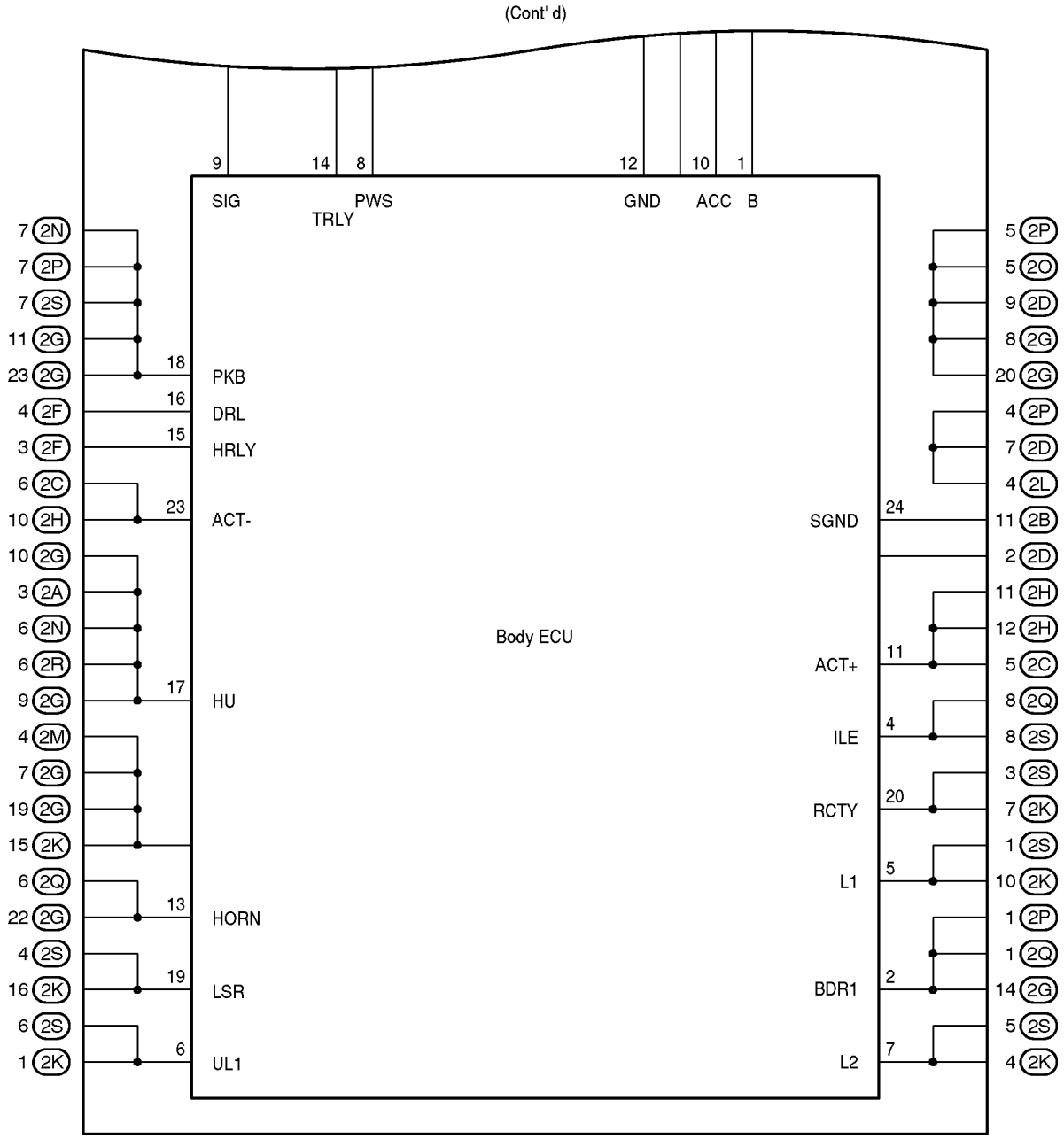

## Inside-the-Plate Wiring Connection Diagram

When conducing continuity test inside the plate, see the plate and terminal ID number (View 1) shown below as well as the inside-the-plate wiring connection diagram

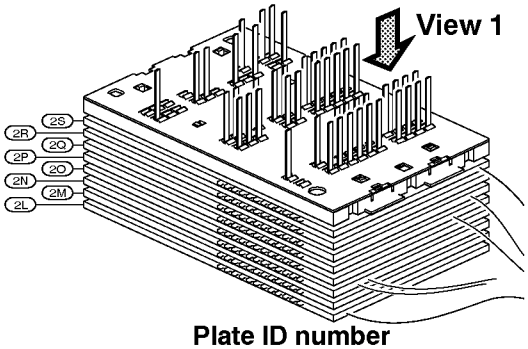


Plate ID number

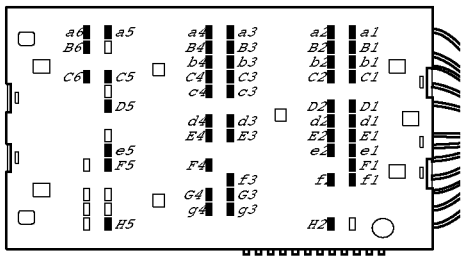

Terminal ID number (View 1)

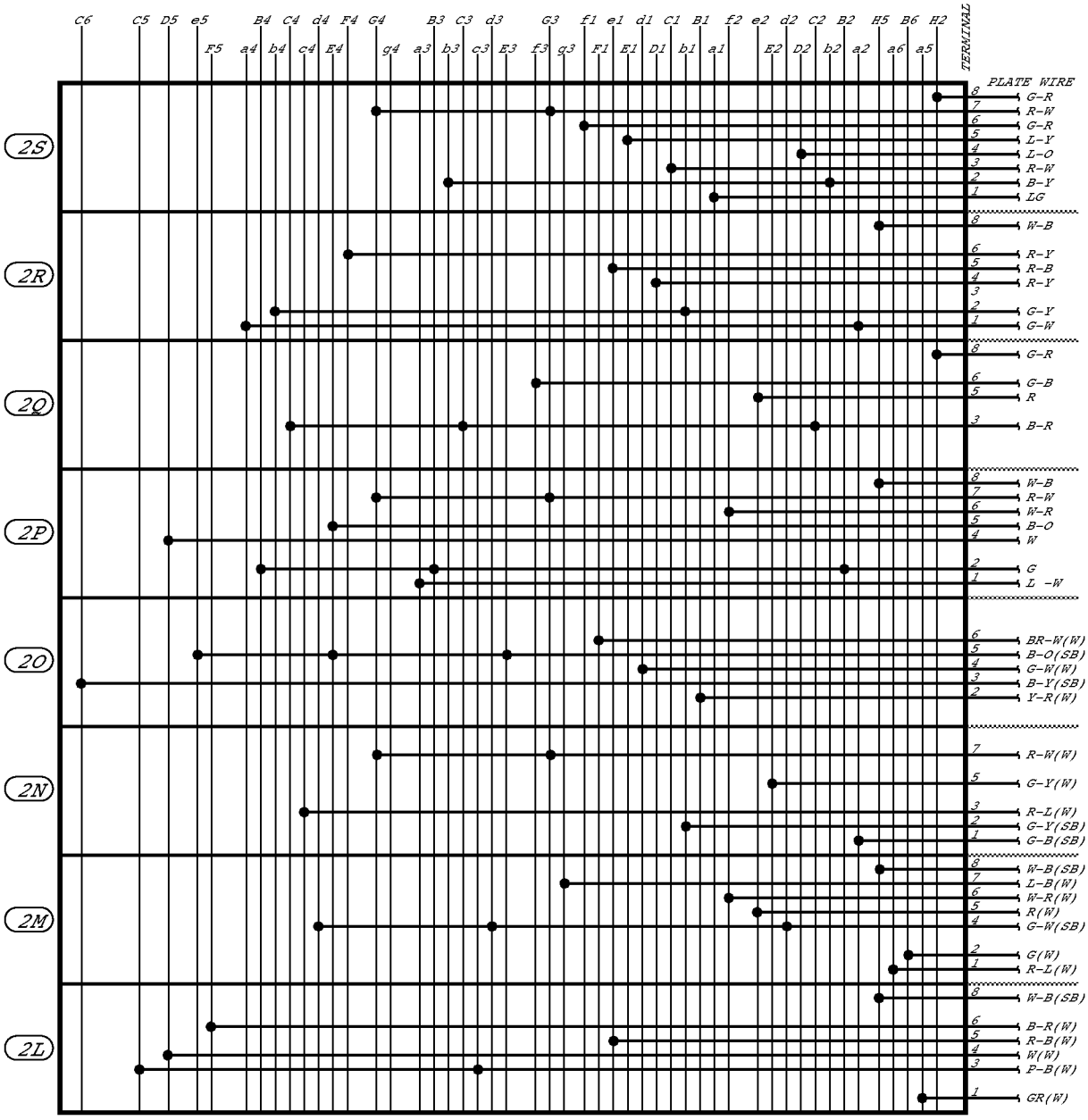

# F RELAY LOCATIONS

| : Passenger Side J/B | Instrument Panel Brace RH (See Page 21) |
|---|---|

(from Instrument Panel Wire)

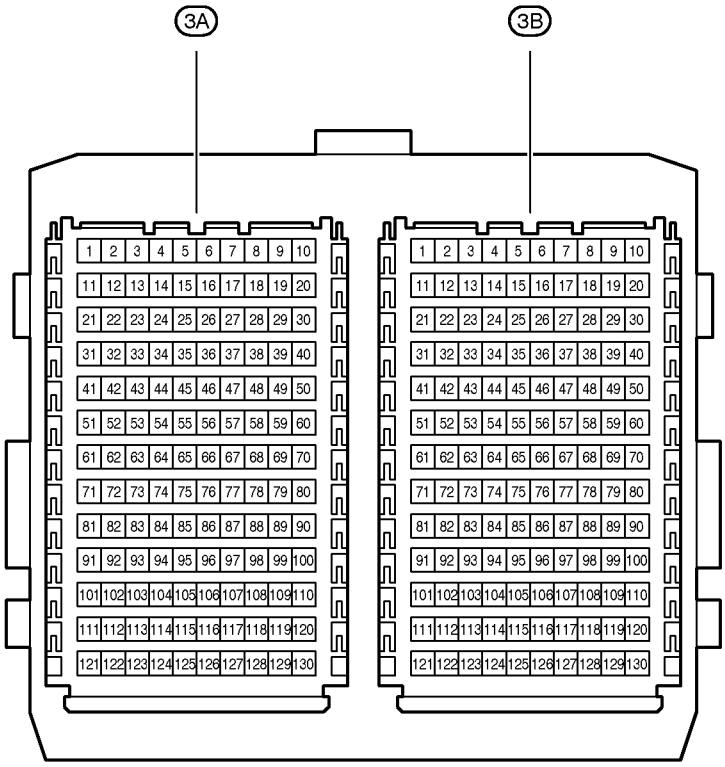


Short Terminal Grouping

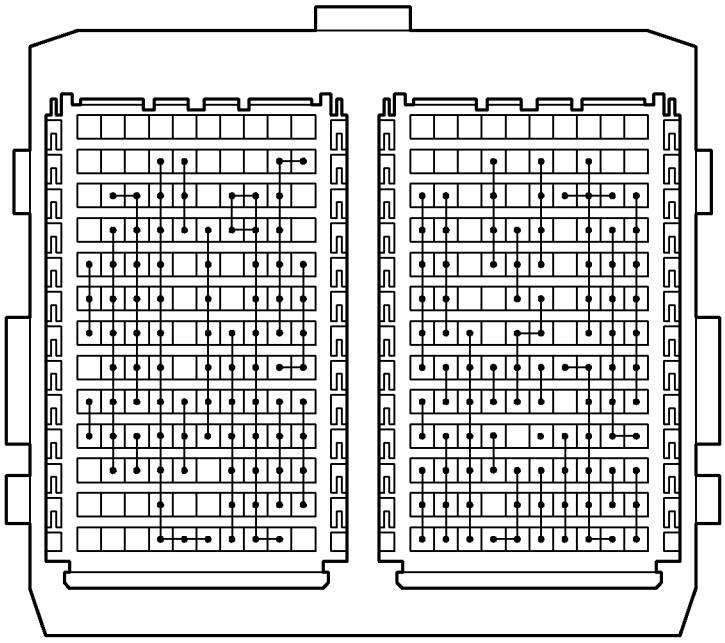

## Position of Parts in Engine Compartment

## [1MZ-FE, 3MZ-FE]

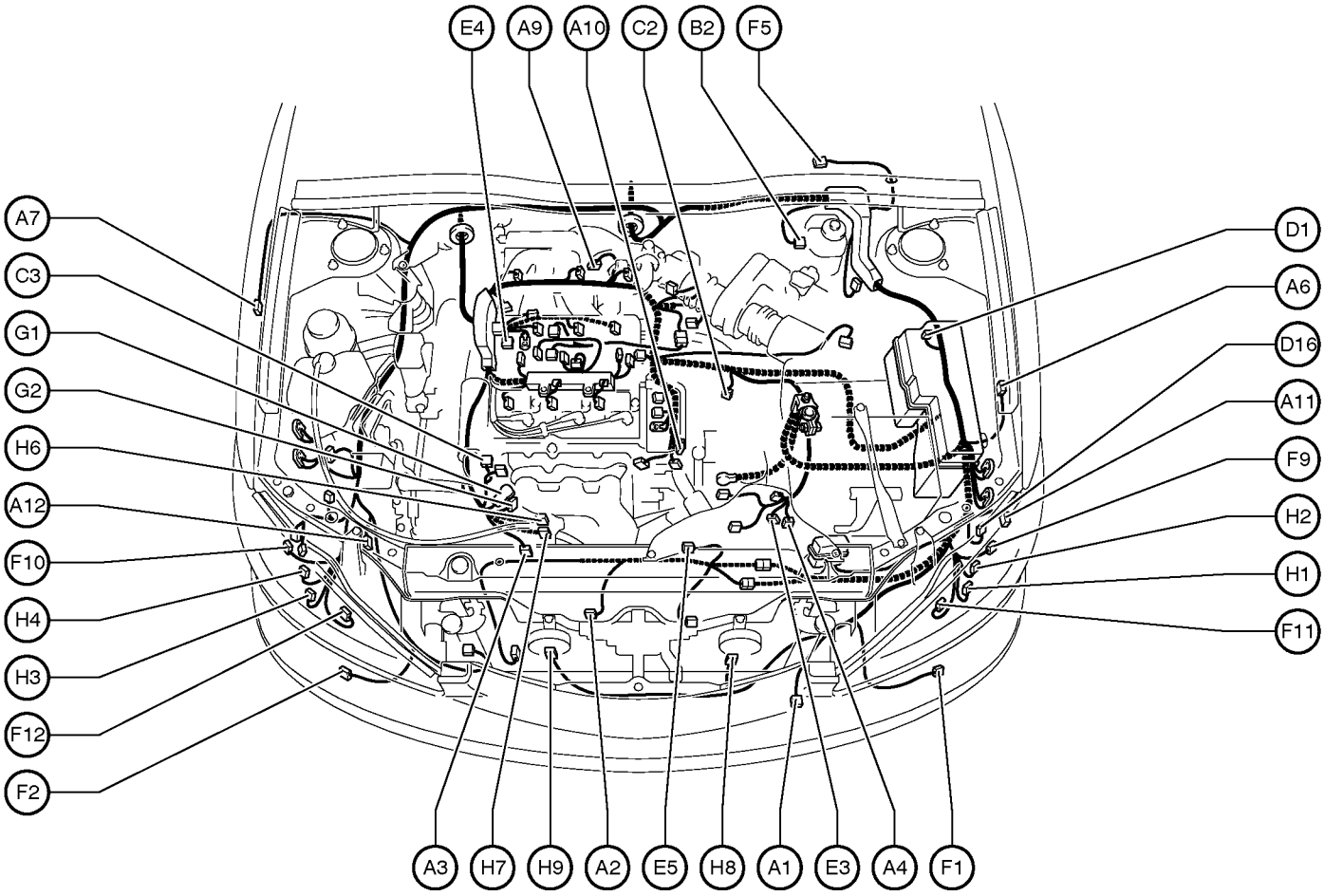


A 1 A/C Ambient Temp. Sensor
A 2 A/C Condenser Fan Motor
A 3 A/C Lock Sensor
A/C Magnetic Clutch
A 4 A/T Indicator Light SW
Back-Up Light SW
Park/Neutral Position SW
A 6 ABS Speed Sensor Front LH
A 7 ABS Speed Sensor Front RH
A 9 Air Fuel Ratio Sensor (Bank 1 Sensor 1)
A10 Air Fuel Ratio Sensor (Bank 2 Sensor 1)
A11 Airbag Sensor Front LH
A12 Airbag Sensor Front RH

B 2 Brake Fluid Level Warning SW

C 2 Counter Gear Speed Sensor
C 3 Crankshaft Position Sensor

D 1 Diode (A/C No.1)
D16 Daytime Running Light Resistor

E 3 Electronically Controlled Transmission Solenoid
E 4 Engine Coolant Temp. Sensor
E 5 Engine Hood Courtesy SW

F 1 Front Fog Light LH
F 2 Front Fog Light RH
F 5 Front Wiper Motor
F 9 Front Parking Light LH
F10 Front Parking Light RH
F11 Front Turn Signal Light LH
F12 Front Turn Signal Light RH

G 1 Generator
G 2 Generator

H 1 Headlight LH (High)
H 2 Headlight LH (Low)
H 3 Headlight RH (High)
H 4 Headlight RH (Low)
H 6 Heated Oxygen Sensor (Bank 1 Sensor 2)
H 7 Heated Oxygen Sensor (Bank 2 Sensor 2)
H 8 Horn (High)
H 9 Horn (Low)

# Position of Parts in Engine Compartment

## [1MZ-FE, 3MZ-FE]

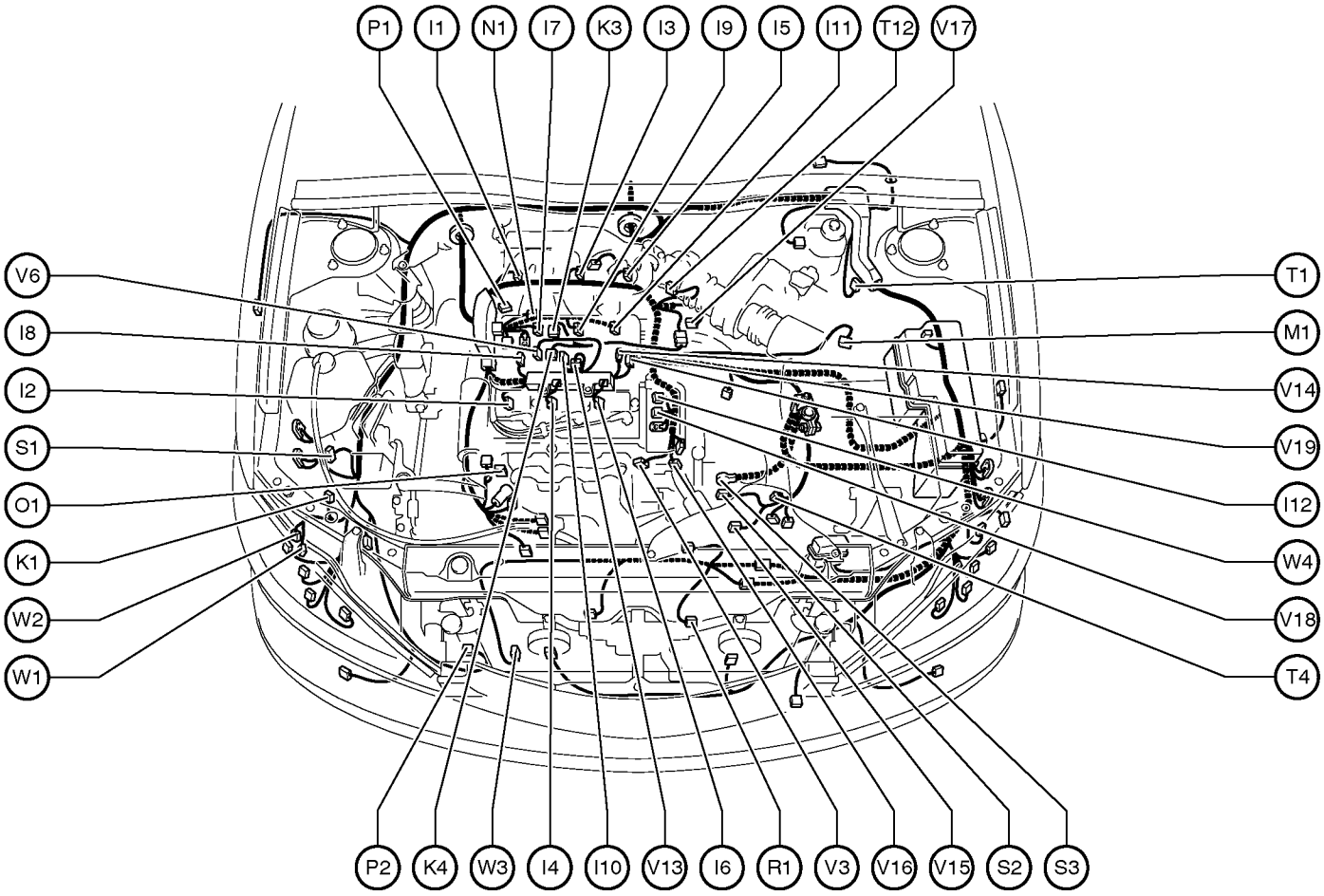


I 1 Ignition Coil and Igniter No.1
I 2 Ignition Coil and Igniter No.2
I 3 Ignition Coil and Igniter No.3
I 4 Ignition Coil and Igniter No.4
I 5 Ignition Coil and Igniter No.5
I 6 Ignition Coil and Igniter No.6
I 7 Injector No.1
I 8 Injector No.2
I 9 Injector No.3
I 10 Injector No.4
I 11 Injector No.5
I 12 Injector No.6

K 1 Keyless Buzzer
K 3 Knock Sensor (Bank 1)
K 4 Knock Sensor (Bank 2)

M 1 Mass Air Flow Meter

N 1 Noise Filter (Ignition)

O 1 Oil Pressure SW

P 1 Power Steering Oil Pressure SW
P 2 Pressure SW

R 1 Radiator Fan Motor

S 1 Skid Control ECU with Actuator
S 2 Starter
S 3 Starter

T 1 Theft Deterrent Horn
T 4 Turbine Speed Sensor
T 12 Throttle Control Motor
Throttle Position Sensor

V 3 VSV (AICV)
V 6 VSV (EVAP)
V 13 VSV (ACIS No.1)
V 14 VSV (ACIS No.2)
V 15 VSV (ACM)
V 16 VVT Sensor LH
V 17 VVT Sensor RH
V 18 VVT Solenoid LH
V 19 VVT Solenoid RH

W 1 Washer Level Sensor
W 2 Washer Motor
W 3 Water Temp. SW No.1
W 4 Water Temp. SW No.2

## Position of Parts in Engine Compartment

## [2AZ-FE]

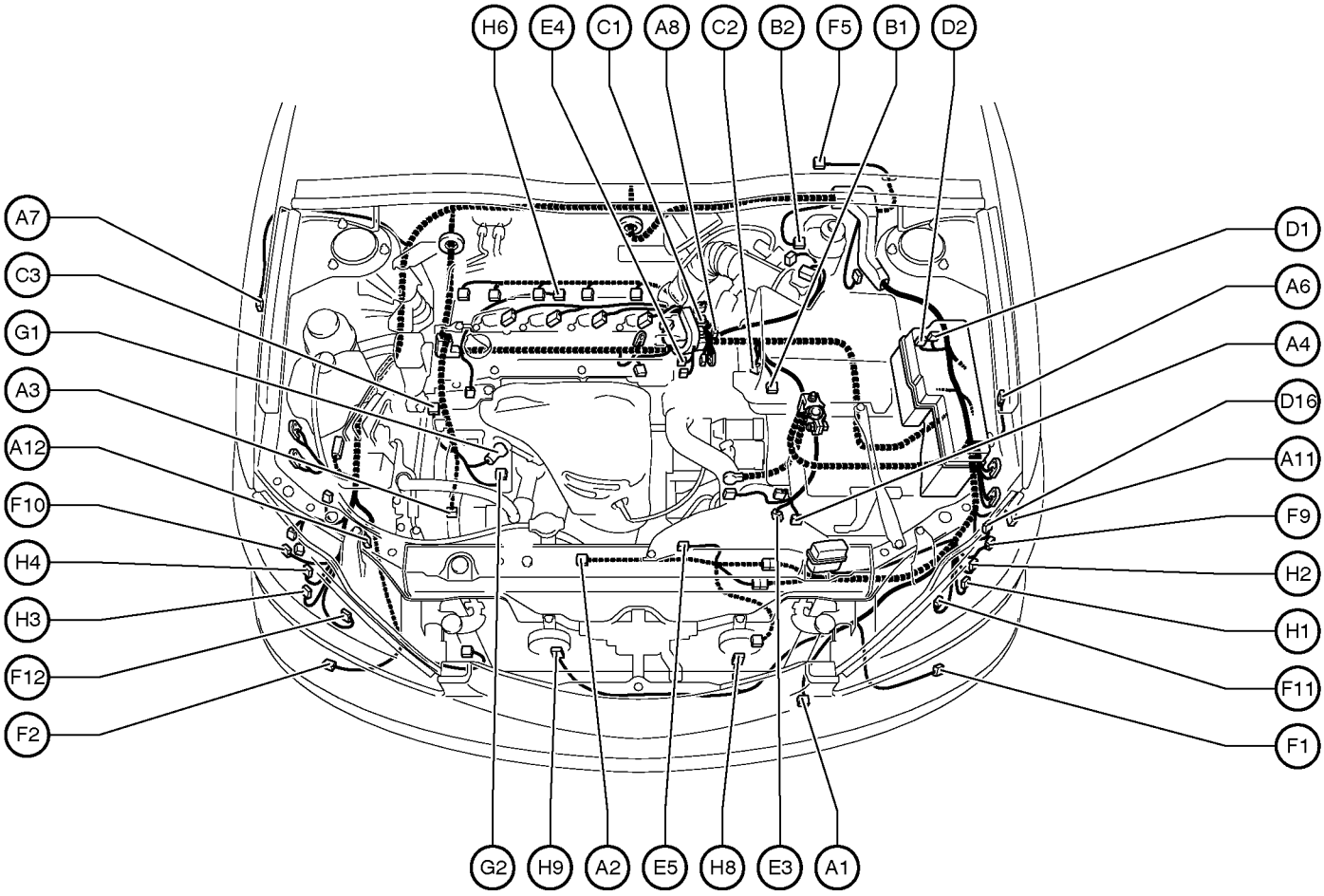


A 1 A/C Ambient Temp. Sensor
A 2 A/C Condenser Fan Motor
A 3 A/C Lock Sensor
A/C Magnetic Clutch
A 4 A/T Indicator Light SW
Back-Up Light SW
Park/Neutral Position SW
A 6 ABS Speed Sensor Front LH
A 7 ABS Speed Sensor Front RH
A 8 Air Fuel Ratio Sensor (Bank 1 Sensor 1)
A 11 Airbag Sensor Front LH
A 12 Airbag Sensor Front RH

B 1 Back-Up Light SW
B 2 Brake Fluid Level Warning SW

C 1 Camshaft Position Sensor
C 2 Counter Gear Speed Sensor
C 3 Crankshaft Position Sensor

D 1 Diode (A/C No.1)
D 2 Diode (A/C No.2)
D16 Daytime Running Light Resistor

E 3 Electronically Controlled Transmission Solenoid
E 4 Engine Coolant Temp. Sensor
E 5 Engine Hood Courtesy SW

F 1 Front Fog Light LH
F 2 Front Fog Light RH
F 5 Front Wiper Motor
F 9 Front Parking Light LH
F 10 Front Parking Light RH
F 11 Front Turn Signal Light LH
F 12 Front Turn Signal Light RH

G 1 Generator
G 2 Generator

H 1 Headlight LH (High)
H 2 Headlight LH (Low)
H 3 Headlight RH (High)
H 4 Headlight RH (Low)
H 6 Heated Oxygen Sensor (Bank 1 Sensor 2)
H 8 Horn (High)
H 9 Horn (Low)

# Position of Parts in Engine Compartment

## [2AZ-FE]

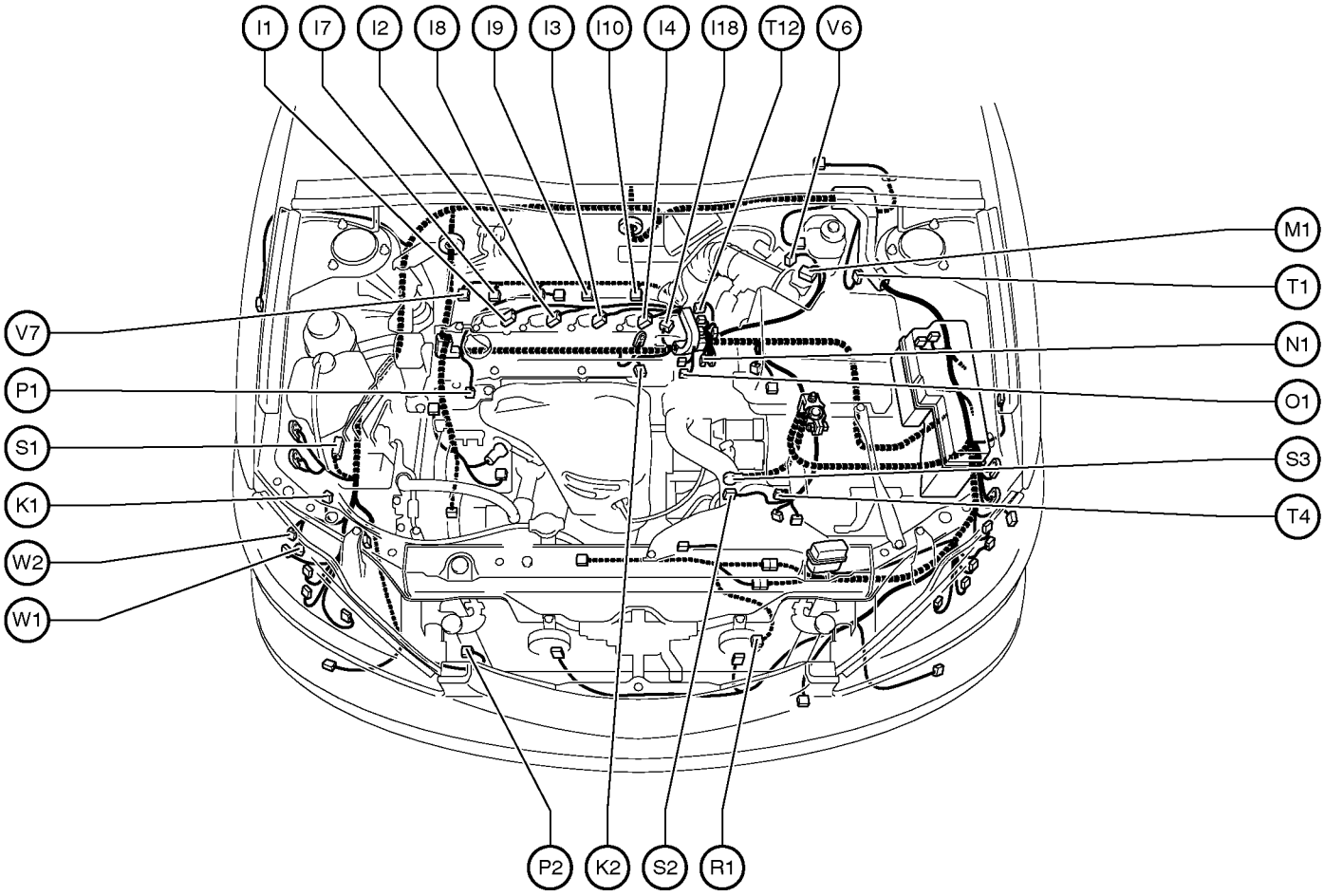


I 1 Ignition Coil and Igniter No.1
I 2 Ignition Coil and Igniter No.2
I 3 Ignition Coil and Igniter No.3
I 4 Ignition Coil and Igniter No.4
I 7 Injector No.1
I 8 Injector No.2
I 9 Injector No.3
I 10 Injector No.4
I 18 Intake Air Control Valve

K 1 Keyless Buzzer
K 2 Knock Sensor (Bank 1)

M 1 Mass Air Flow Meter

N 1 Noise Filter (Ignition)

O 1 Oil Pressure SW

P 1 Power Steering Oil Pressure SW
P 2 Pressure SW

R 1 Radiator Fan Motor

S 1 Skid Control ECU with Actuator
S 2 Starter
S 3 Starter

T 1 Theft Deterrent Horn
T 4 Turbine Speed Sensor
T 12 Throttle Control Motor
Throttle Position Sensor

V 6 VSV (EVAP)
V 7 VVT Solenoid

W 1 Washer Level Sensor
W 2 Washer Motor

## Position of Parts in Instrument Panel

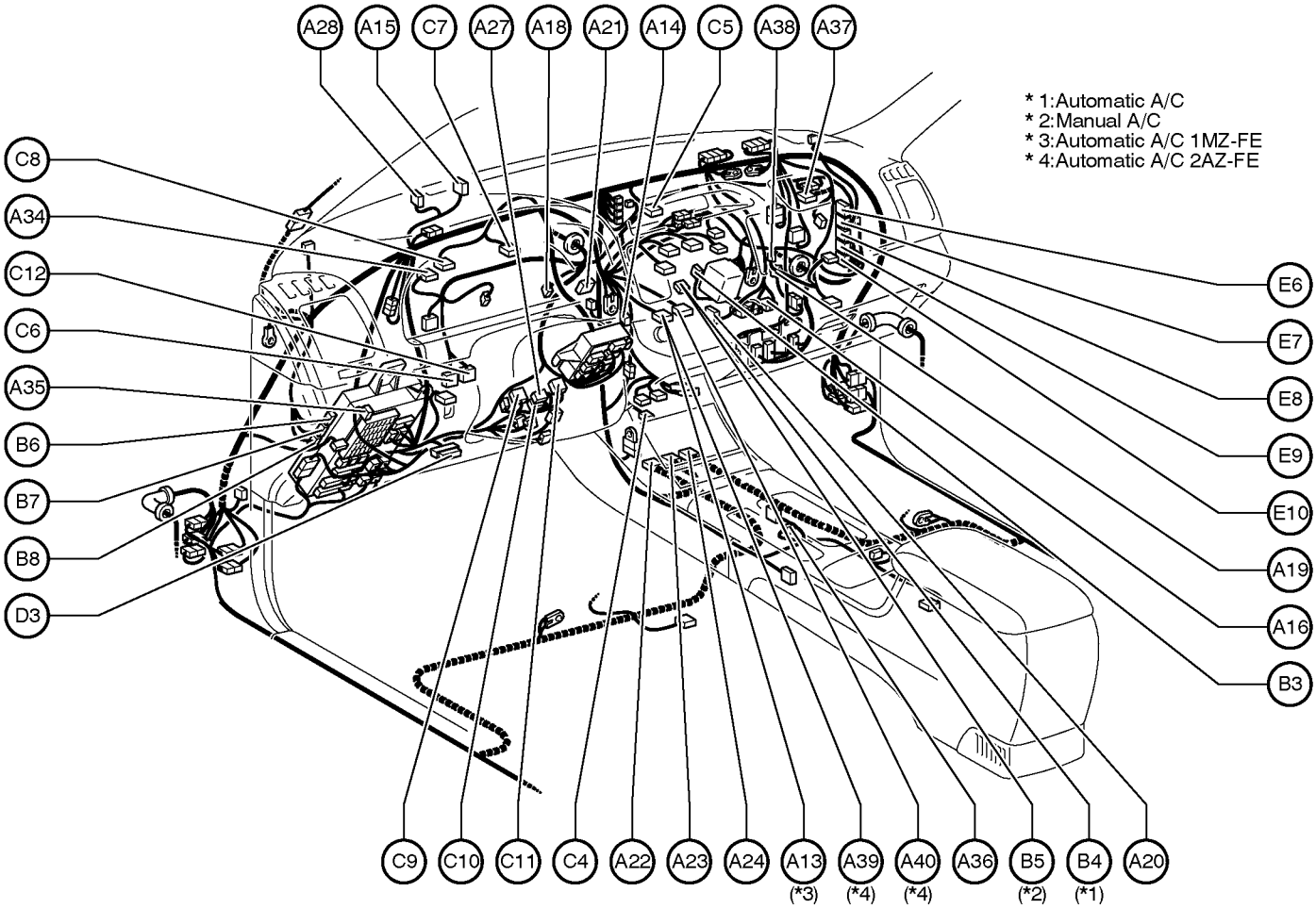


A13 A/C Control Assembly
A14 A/C Room Temp. Sensor
A15 A/C Solar Sensor
A16 A/C Thermistor
A18 Accelerator Position Sensor
A19 Air Inlet Control Servo Motor
A20 Air Mix Control Servo Motor
A21 Air Vent Mode Servo Motor
A22 Airbag Sensor Assembly
A23 Airbag Sensor Assembly
A24 Airbag Sensor Assembly
A27 Airbag Squib (Steering Wheel Pad)
A28 Automatic Light Control Sensor
A34 Adjustable Pedal Motor
A35 Adjustable Pedal SW
A36 A/T Shift Lever Illumination
Transmission Control SW
A37 Airbag Squib (Front Airbag Sensor Assembly)
A38 A/C Amplifier
A39 A/C Control Assembly
A40 A/C Control Assembly

B 3 Blower Motor
B 4 Blower Motor Controller
B 5 Blower Resistor
B 6 Body ECU
B 7 Body ECU
B 8 Body ECU

C 4 Cigarette Lighter
Cigarette Lighter Illumination
C 5 Clock
C 6 Clutch Start SW
C 7 Combination Meter
C 8 Combination Meter
C 9 Combination SW
C10 Combination SW
C11 Combination SW
C12 Cruise Control Clutch SW

D 3 Data Link Connector 3

E 6 Engine Control Module
E 7 Engine Control Module
E 8 Engine Control Module
E 9 Engine Control Module
E10 Engine Control Module

# Position of Parts in Instrument Panel

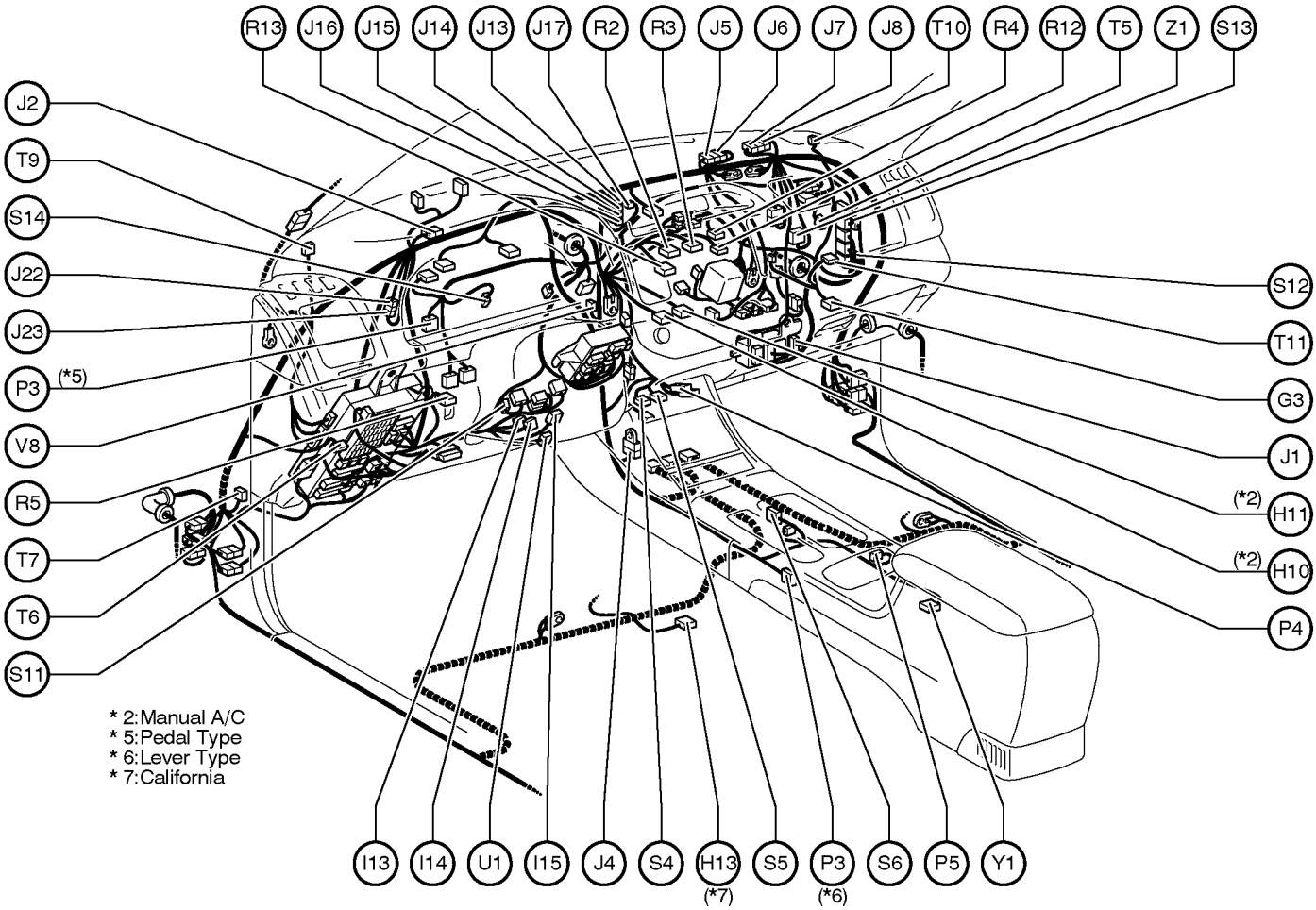


G 3 Glove Box Light and SW

H10 Heater Control SW
H11 Heater Control SW
H13 Heated Oxygen Sensor (Bank 1 Sensor 3)

I 13 Ignition Key Cylinder Light
I 14 Ignition Key Cylinder Light
Transponder Key Amplifier
I 15 Ignition SW

J 1 Junction Connector
J 2 Junction Connector
J 4 Junction Connector
J 5 Junction Connector
J 6 Junction Connector
J 7 Junction Connector
J 8 Junction Connector
J 13 Junction Connector
J 14 Junction Connector
J 15 Junction Connector
J 16 Junction Connector
J 17 Junction Connector
J 22 Junction Connector
J 23 Junction Connector

P 3 Parking Brake SW
P 4 Power Outlet (Front)
P 5 Power Outlet (Rear)

R 2 Radio and Player
R 3 Radio and Player
R 4 Radio and Player with Display (w/ Navigation System)
Radio and Player (w/o Navigation System)
R 5 Rheostat
R12 Radio and Player with Display
R13 Radio and Player with Display (w/ Navigation System)
Radio and Player (w/o Navigation System)

S 4 Seat Heater SW (Driver's Seat)
S 5 Seat Heater SW (Front Passenger's Seat)
S 6 Shift Lock Control ECU
S 11 Steering Sensor
S 12 Stereo Component Amplifier
S 13 Stereo Component Amplifier
S 14 Stop Light SW

T 5 Theft Deterrent ECU
T 6 TRAC OFF SW
T 7 Turn Signal Flasher Relay
T 9 Tweeter LH
T 10 Tweeter RH
T 11 Transponder Key Computer

U 1 Unlock Warning SW

V 8 VSC Warning Buzzer

Y 1 Yaw Rate Sensor

Z 1 Option Connector (TVIP ECU)

## Position of Parts in Body

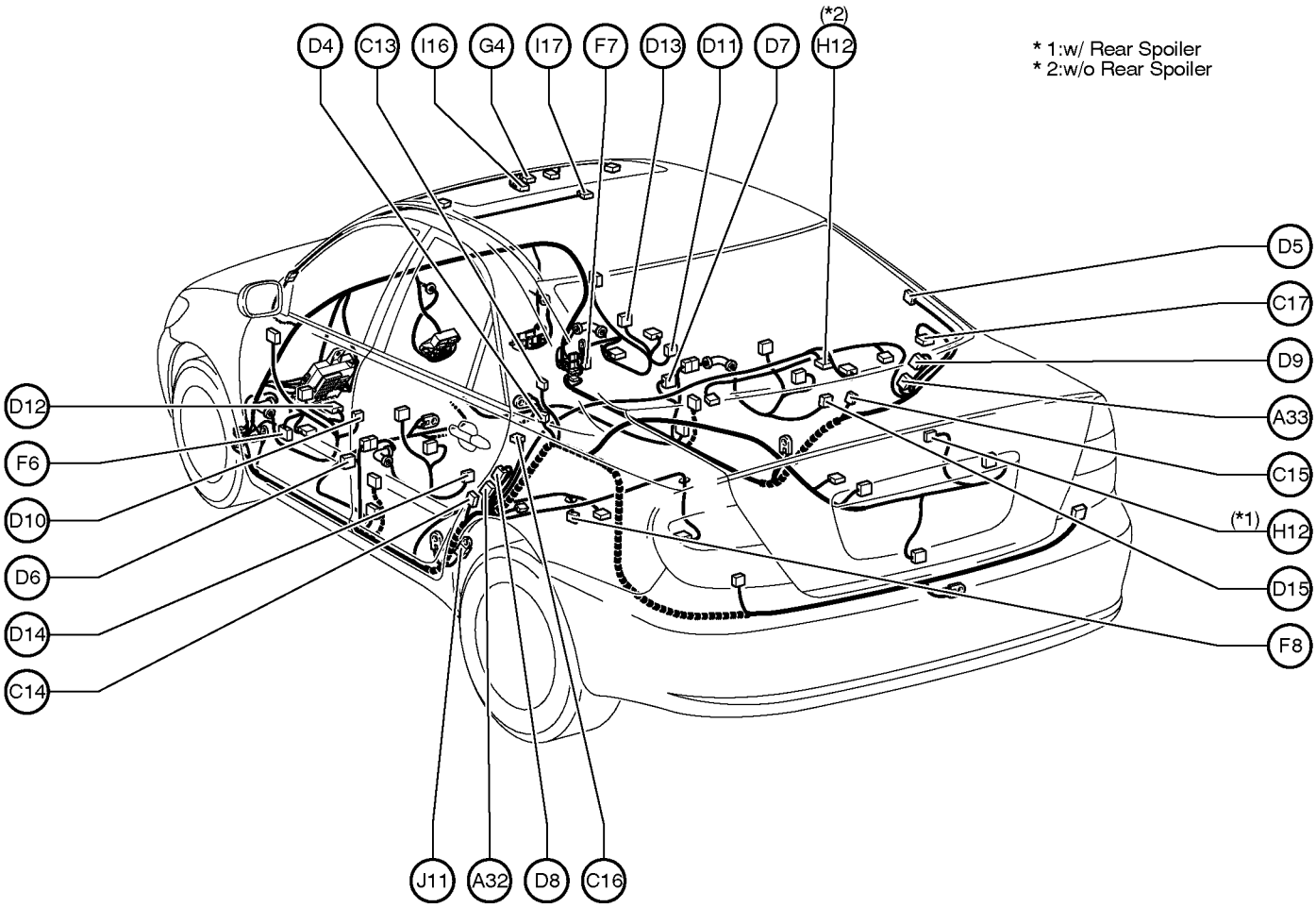


A32 ABS Speed Sensor Rear LH
A33 ABS Speed Sensor Rear RH

C13 Choke Coil
C14 Curtain Shield Airbag Sensor LH
C15 Curtain Shield Airbag Sensor RH
C16 Curtain Shield Airbag Squib LH
C17 Curtain Shield Airbag Squib RH

D 4 Diode
D 5 Door Control Receiver
D 6 Door Courtesy SW Front LH
D 7 Door Courtesy SW Front RH
D 8 Door Courtesy SW Rear LH
D 9 Door Courtesy SW Rear RH
D10 Door Key Lock and Unlock SW Front LH
Door Lock Motor Front LH
Door Unlock Detection SW Front LH
D11 Door Key Lock and Unlock SW Front RH
Door Lock Motor Front RH
Door Unlock Detection SW Front RH
D12 Door Lock Control SW Front LH
Power Window Master SW
D13 Door Lock Control SW RH
D14 Door Lock Motor Rear LH
Door Unlock Detection SW Rear LH
D15 Door Lock Motor Rear RH
Door Unlock Detection SW Rear RH

F 6 Front Door Speaker LH
F 7 Front Door Speaker RH
F 8 Fuel Pump
Fuel Sender

G 4 Garage Door Opener
Moon Roof Control SW
Personal Light

H12 High Mounted Stop Light

I 16 Inner Mirror
I 17 Interior Light

J 11 Junction Connector

# Position of Parts in Body

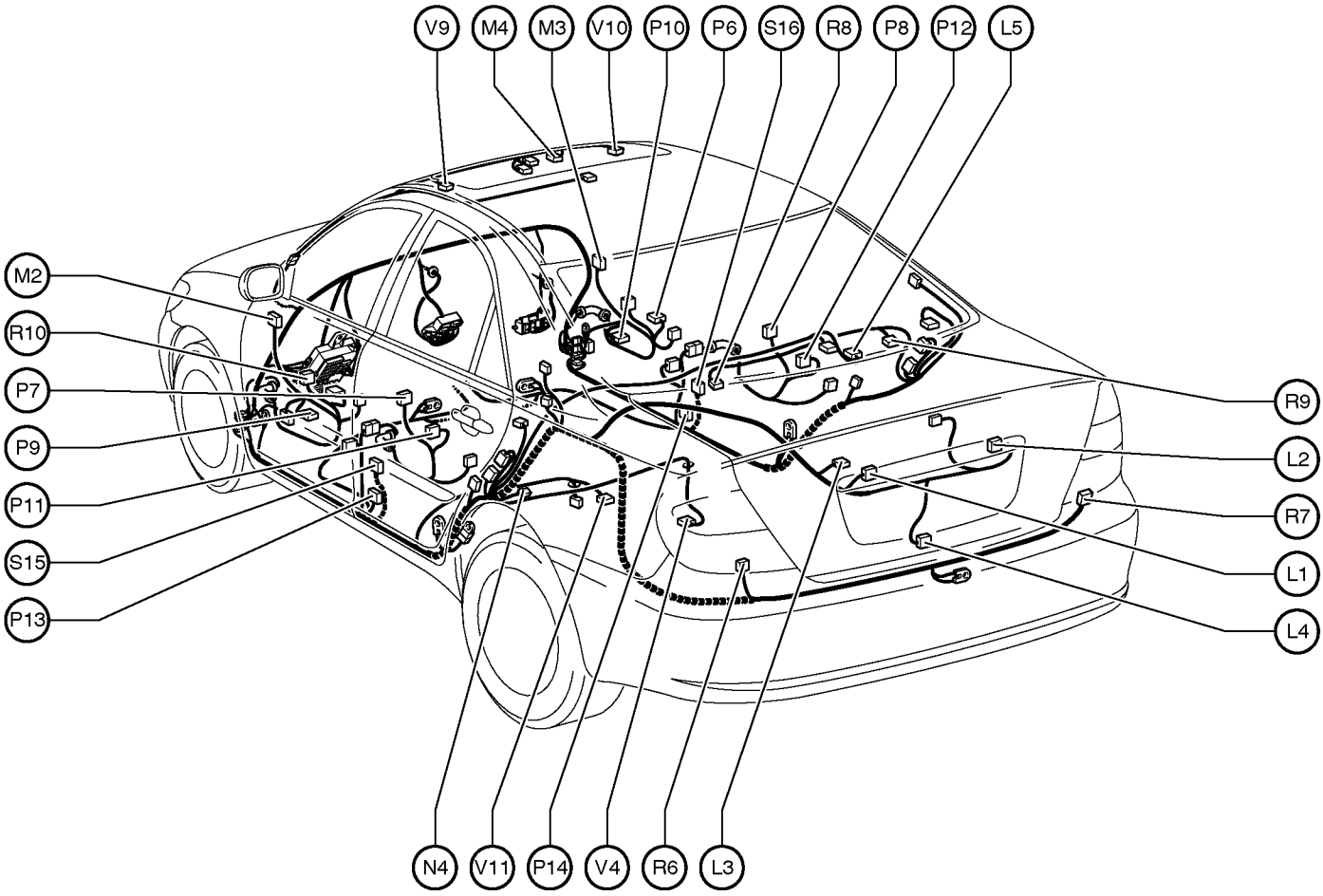


L 1 License Plate Light LH
L 2 License Plate Light RH
L 3 Luggage Compartment Door Key Unlock SW
L 4 Luggage Compartment Door Opener Motor
Luggage Compartment Light SW
L 5 Luggage Compartment Light

M 2 Mirror Heater LH
Remote Control Mirror LH
M 3 Mirror Heater RH
Remote Control Mirror RH
M 4 Moon Roof Control ECU and Motor

N 4 Noise Filter

P 6 Power Window Control SW Front RH
P 7 Power Window Control SW Rear LH
P 8 Power Window Control SW Rear RH
P 9 Power Window Motor Front LH
P10 Power Window Motor Front RH
P11 Power Window Motor Rear LH
P12 Power Window Motor Rear RH
P13 Pretensioner LH
P14 Pretensioner RH

R 6 Rear Combination Light LH
R 7 Rear Combination Light RH
R 8 Rear Speaker LH
R 9 Rear Speaker RH
R10 Remote Control Mirror SW

S15 Side Airbag Sensor LH
S16 Side Airbag Sensor RH

V 4 VSV (Canister Closed Valve)
V 9 Vanity Light LH
V10 Vanity Light RH
V11 Vapor Pressure Sensor

## Position of Parts in Seat

## [w/ Power Seat]

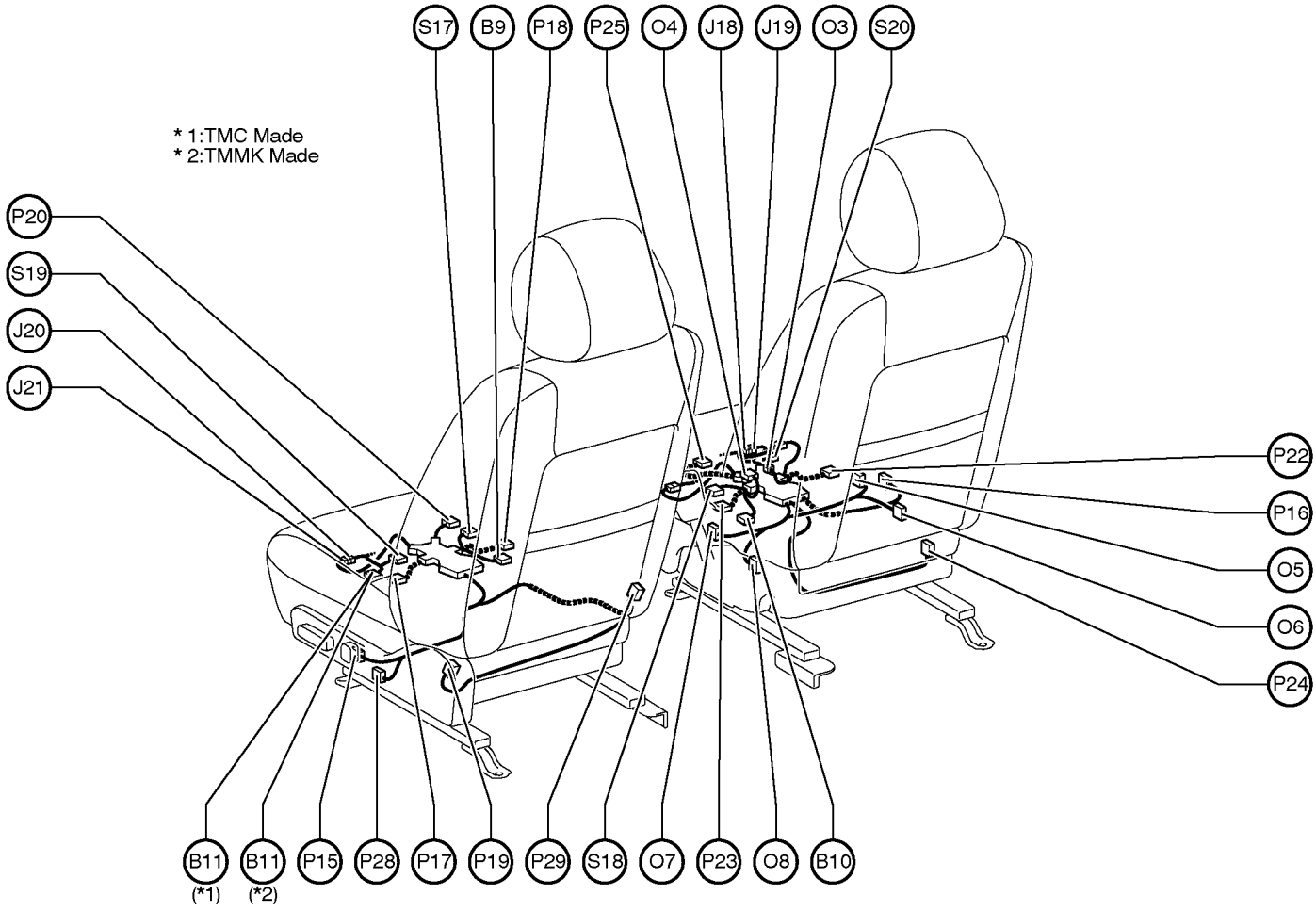


B 9 Buckle SW LH
B 10 Buckle SW (Front Passenger's Side)
B 11 Buckle SW LH
Seat Position Airbag Sensor

J 18 Junction Connector
J 19 Junction Connector
J 20 Junction Connector
J 21 Junction Connector

O 3 Occupant Classification ECU
O 4 Occupant Classification ECU
O 5 Occupant Classification Sensor Front RH
O 6 Occupant Classification Sensor Rear RH
O 7 Occupant Classification Sensor Front LH
O 8 Occupant Classification Sensor Rear LH

P 15 Power Seat Control SW (Driver's Seat)
P 16 Power Seat Control SW (Front Passenger's Seat)
P 17 Power Seat Motor (Driver's Seat Front Vertical Control)
P 18 Power Seat Motor (Driver's Seat Lifter Control)
P 19 Power Seat Motor (Driver's Seat Reclining Control)
P 20 Power Seat Motor (Driver's Seat Slide Control)
P 22 Power Seat Motor
(Front Passenger's Seat Front Vertical Control)
P 23 Power Seat Motor
(Front Passenger's Seat Lifter Control)
P 24 Power Seat Motor
(Front Passenger's Seat Reclining Control)
P 25 Power Seat Motor
(Front Passenger's Seat Slide Control)
P 28 Power Seat Control SW
(Driver's Seat Lumbar Support Control)
P 29 Power Seat Motor
(Driver's Seat Lumbar Support Control)

S 17 Seat Heater LH
S 18 Seat Heater RH
S 19 Side Airbag Squib LH
S 20 Side Airbag Squib RH

# Position of Parts in Seat

## [w/o Power Seat]

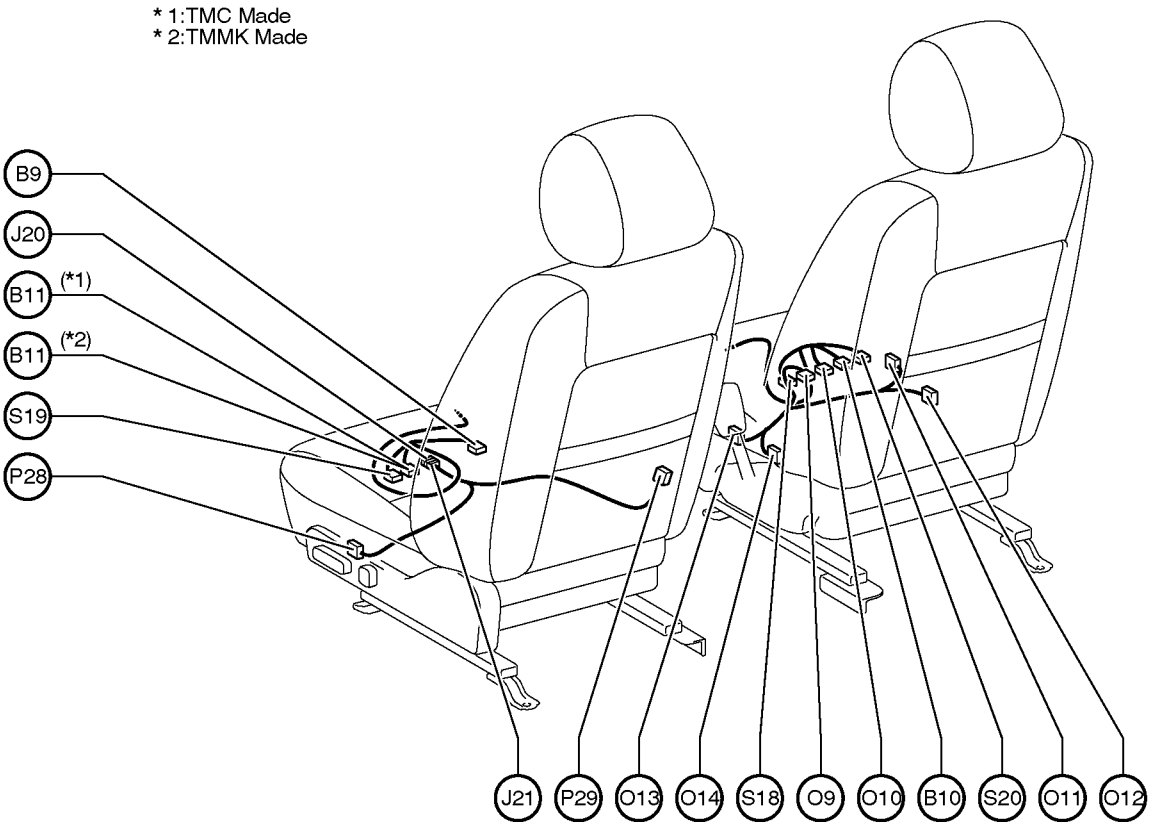


B 9 Buckle SW LH
B10 Buckle SW (Front Passenger's Side)
B11 Buckle SW LH
Seat Position Airbag Sensor

J 20 Junction Connector
J 21 Junction Connector

O 9 Occupant Classification ECU
O10 Occupant Classification ECU
O11 Occupant Classification Sensor Front RH
O12 Occupant Classification Sensor Rear RH
O13 Occupant Classification Sensor Front LH
O14 Occupant Classification Sensor Rear LH

P28 Power Seat Control SW
(Driver's Seat Lumbar Support Control)
P29 Power Seat Motor
(Driver's Seat Lumbar Support Control)

S18 Seat Heater RH
S19 Side Airbag Squib LH
S20 Side Airbag Squib RH

▭ : Location of Connector Joining Wire Harness and Wire Harness

▽ : Location of Ground Points

**[1MZ-FE, 3MZ-FE]**

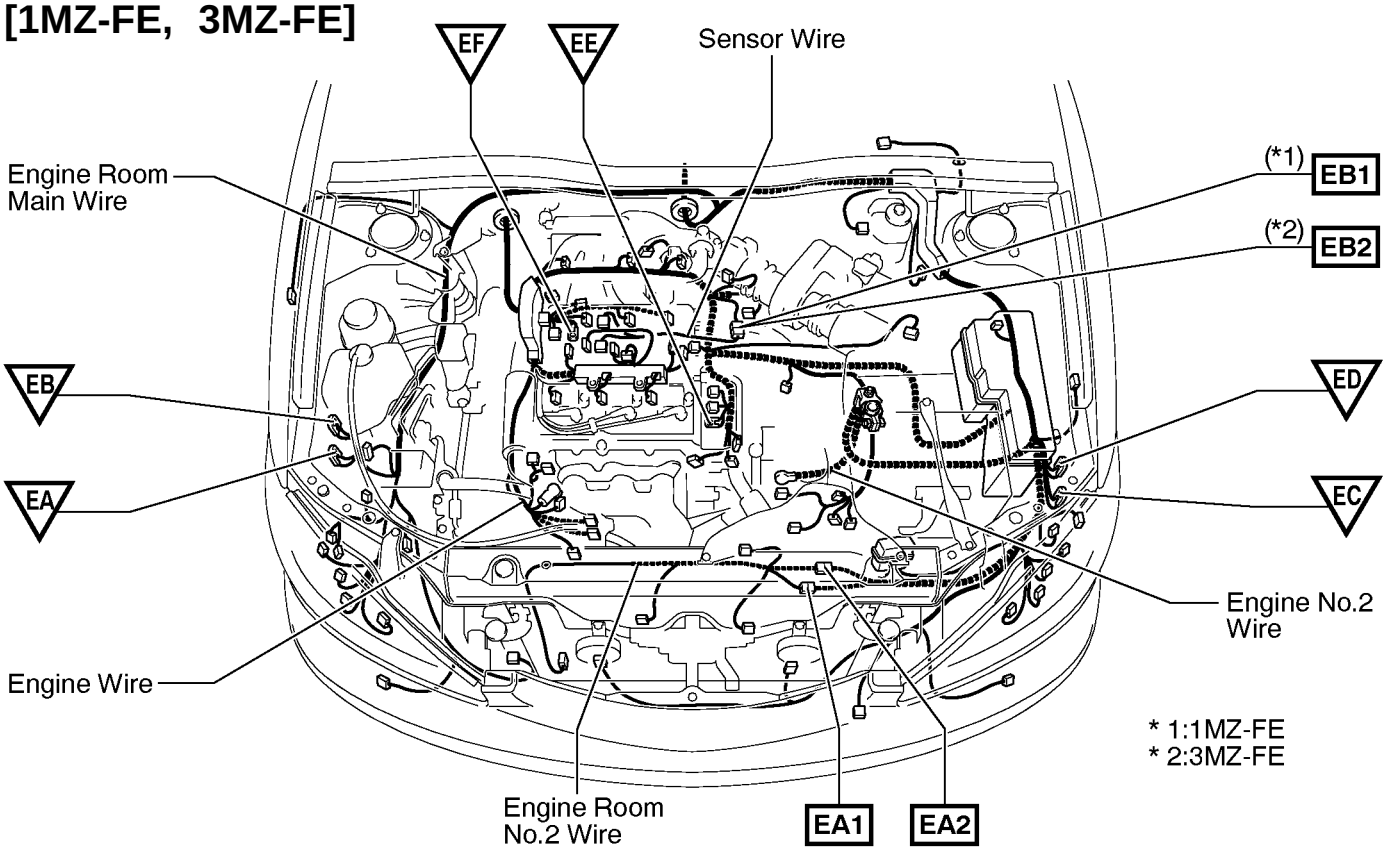


⬡ : Location of Splice Points

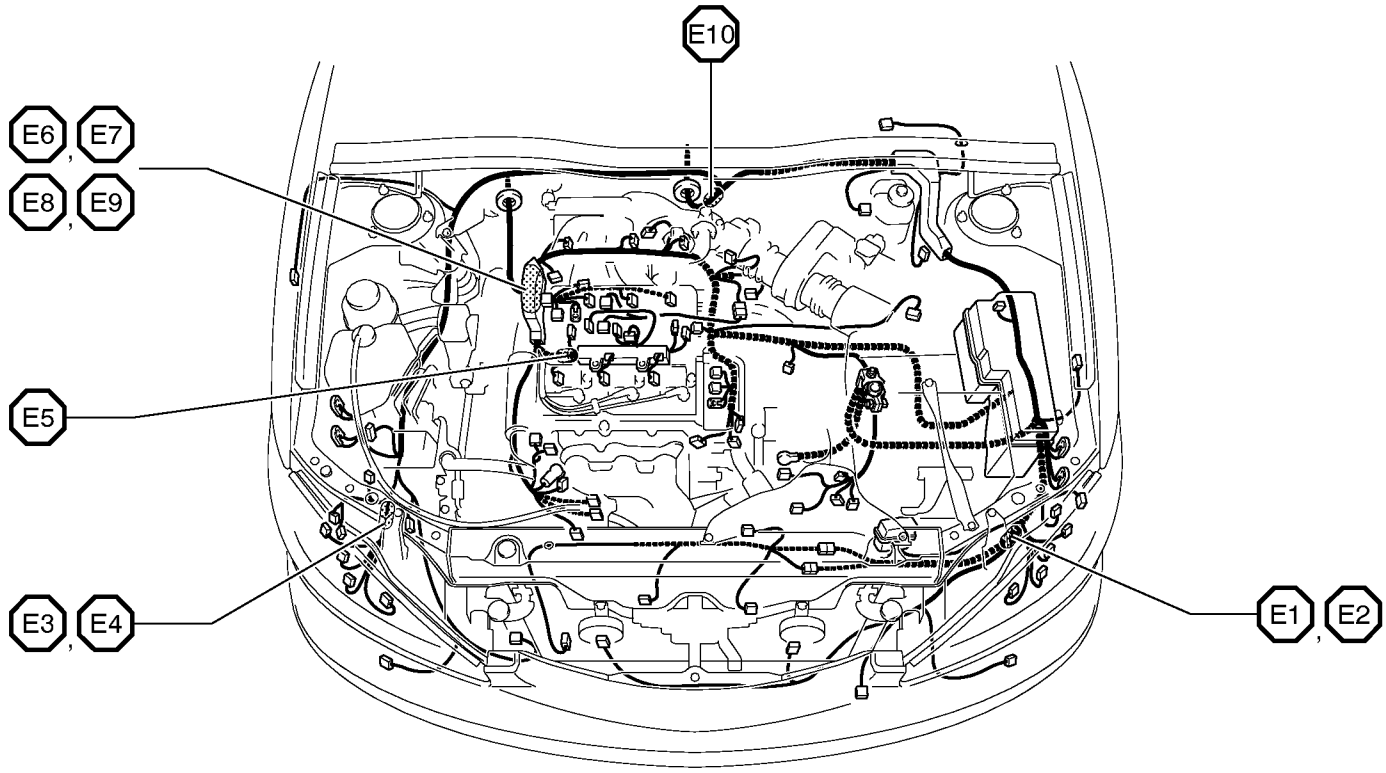

# Connector Joining Wire Harness and Wire Harness

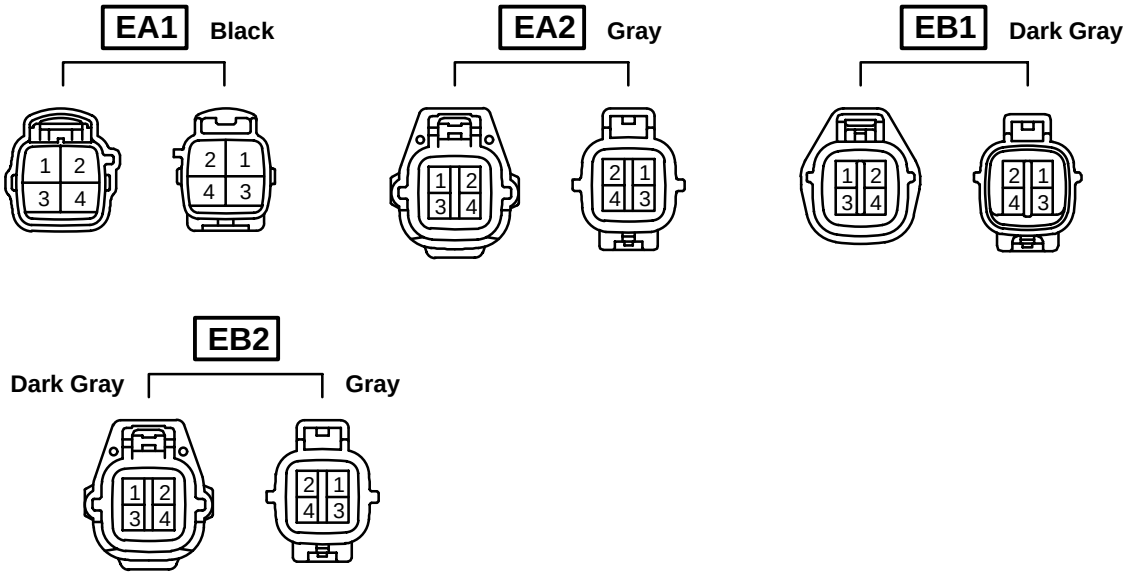


| Code | Joining Wire Harness and Wire Harness (Connector Location) |
|---|---|
| EA1 | Engine Room Main Wire and Engine Room No.2 Wire (Radiator Side Support LH) |
| EA2 | |
| EB1 | Engine Wire and Sensor Wire (Left Bank of Cylinder Head) |
| EB2 | |

▭ : Location of Connector Joining Wire Harness and Wire Harness

▽ : Location of Ground Points

**[2AZ-FE]**

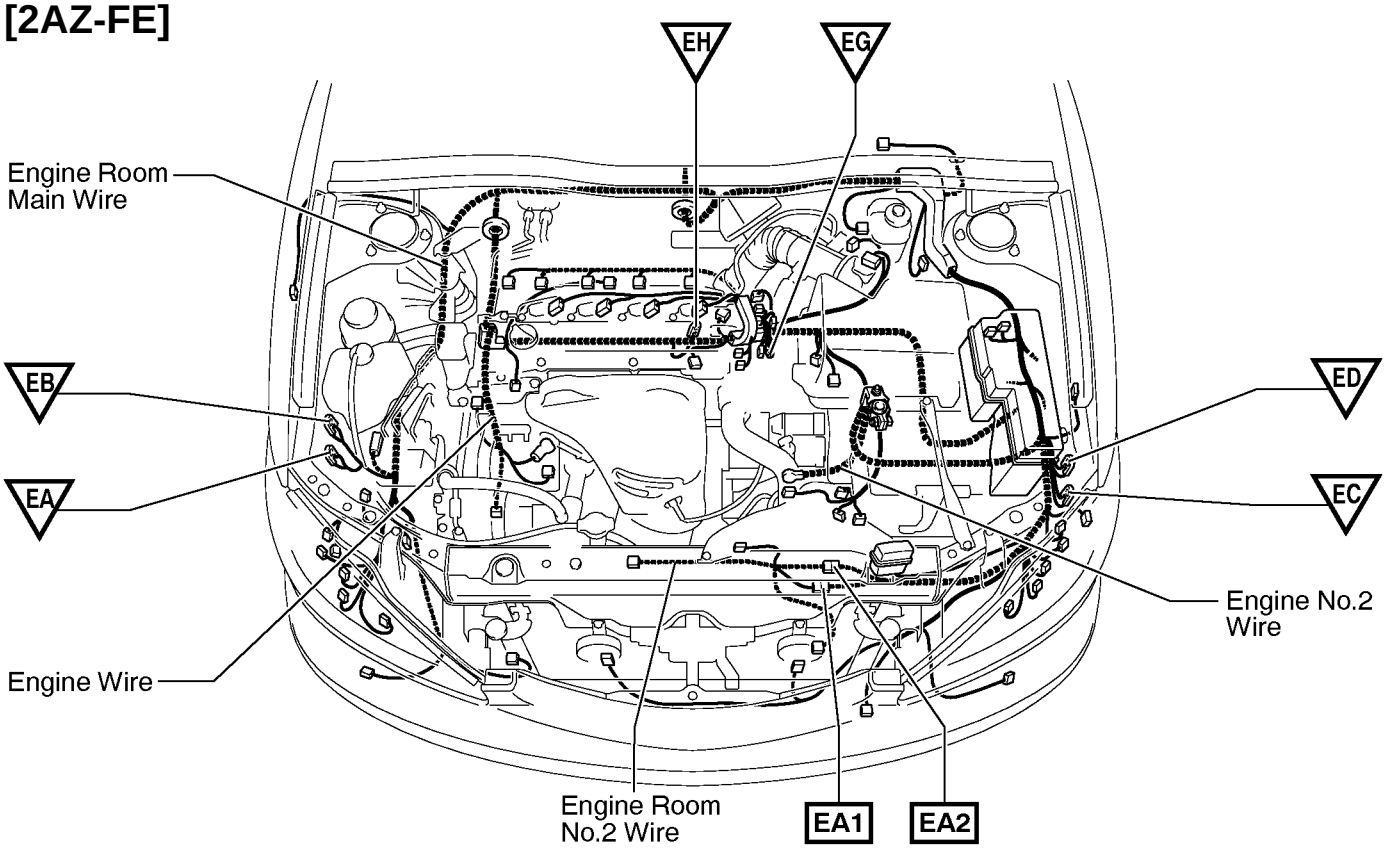


⬡ : Location of Splice Points

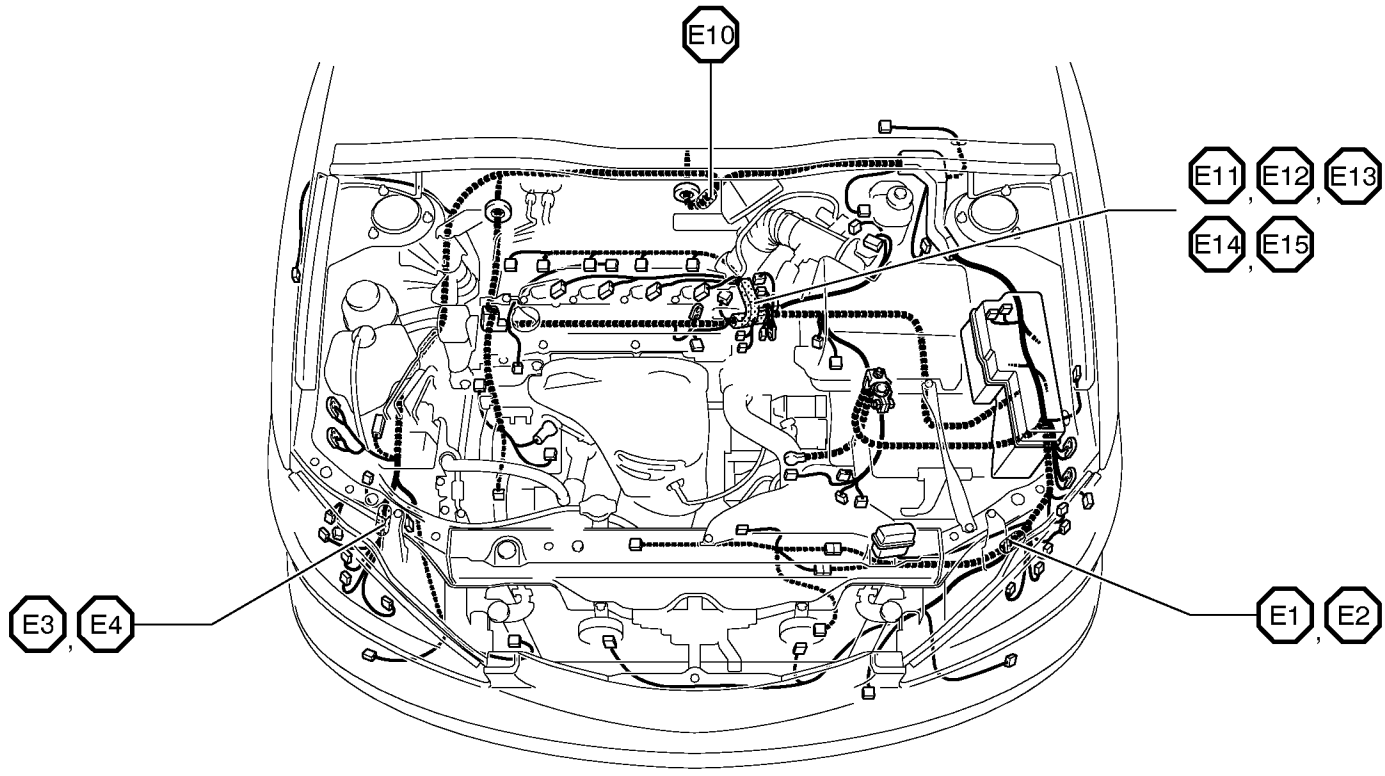

# Connector Joining Wire Harness and Wire Harness

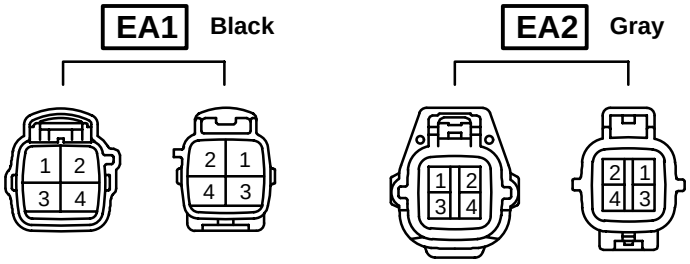


| Code | Joining Wire Harness and Wire Harness (Connector Location) |
|---|---|
| EA1 | Engine Room Main Wire and Engine Room No.2 Wire (Radiator Side Support LH) |
| EA2 | |

## : Location of Connector Joining Wire Harness and Wire Harness

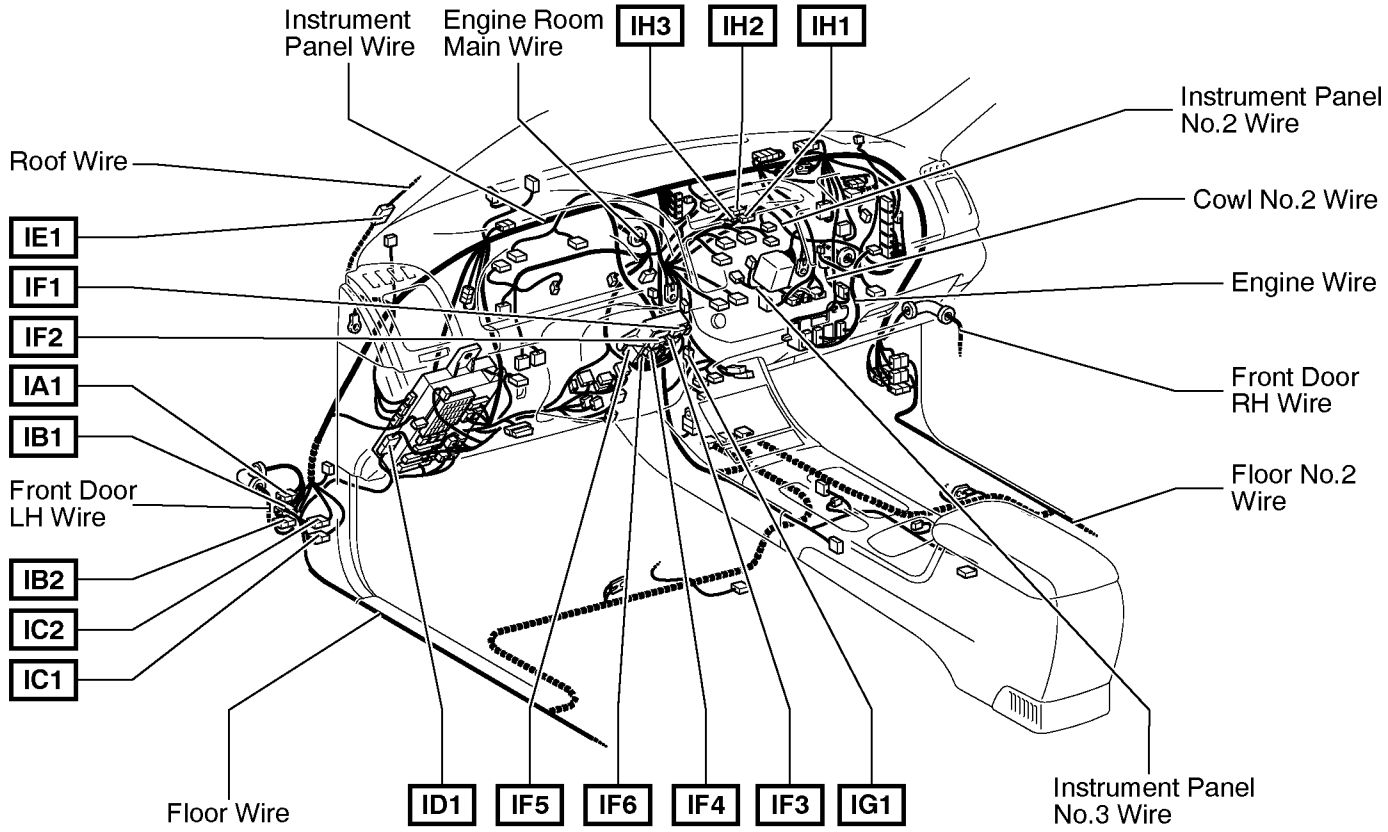


## : Location of Ground Points

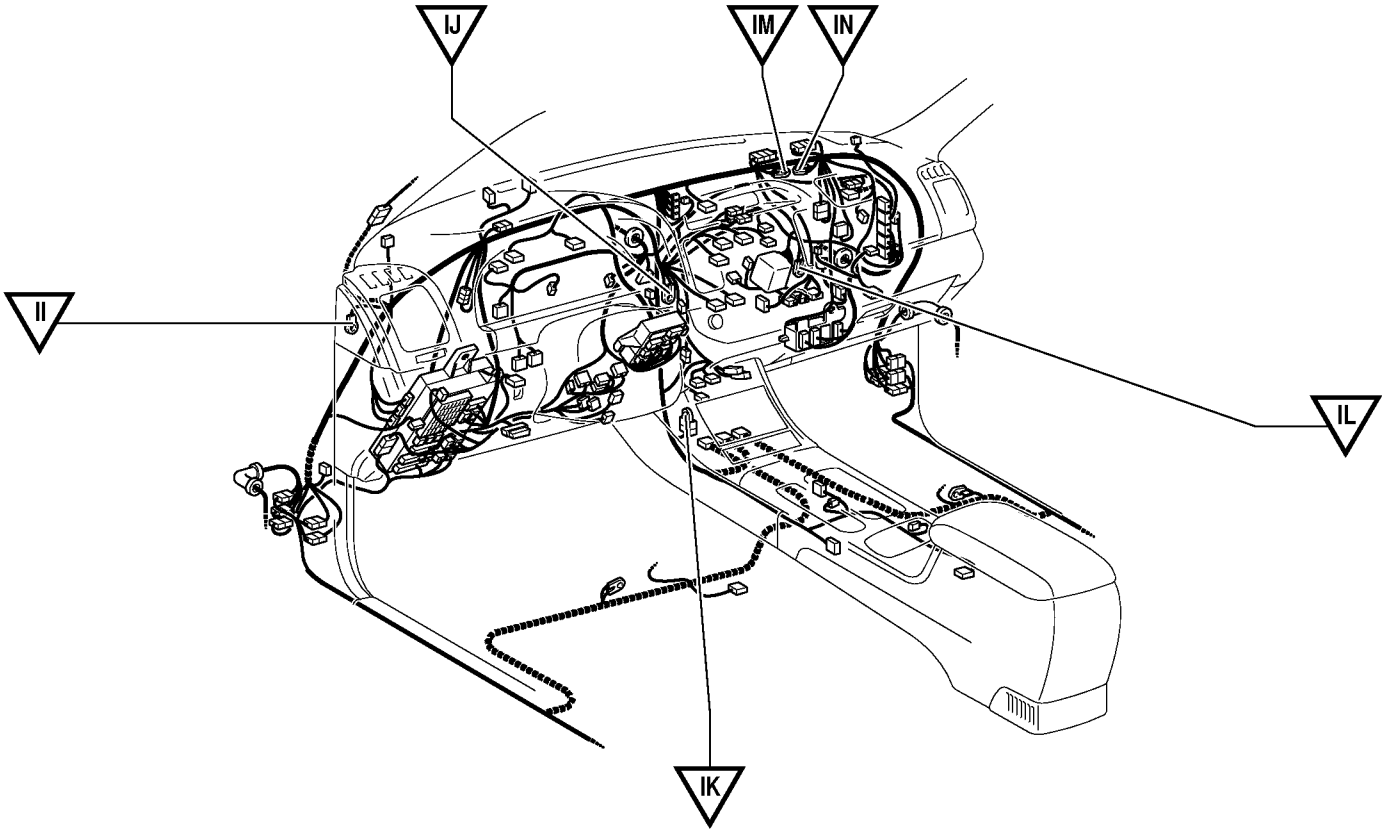

# Connector Joining Wire Harness and Wire Harness

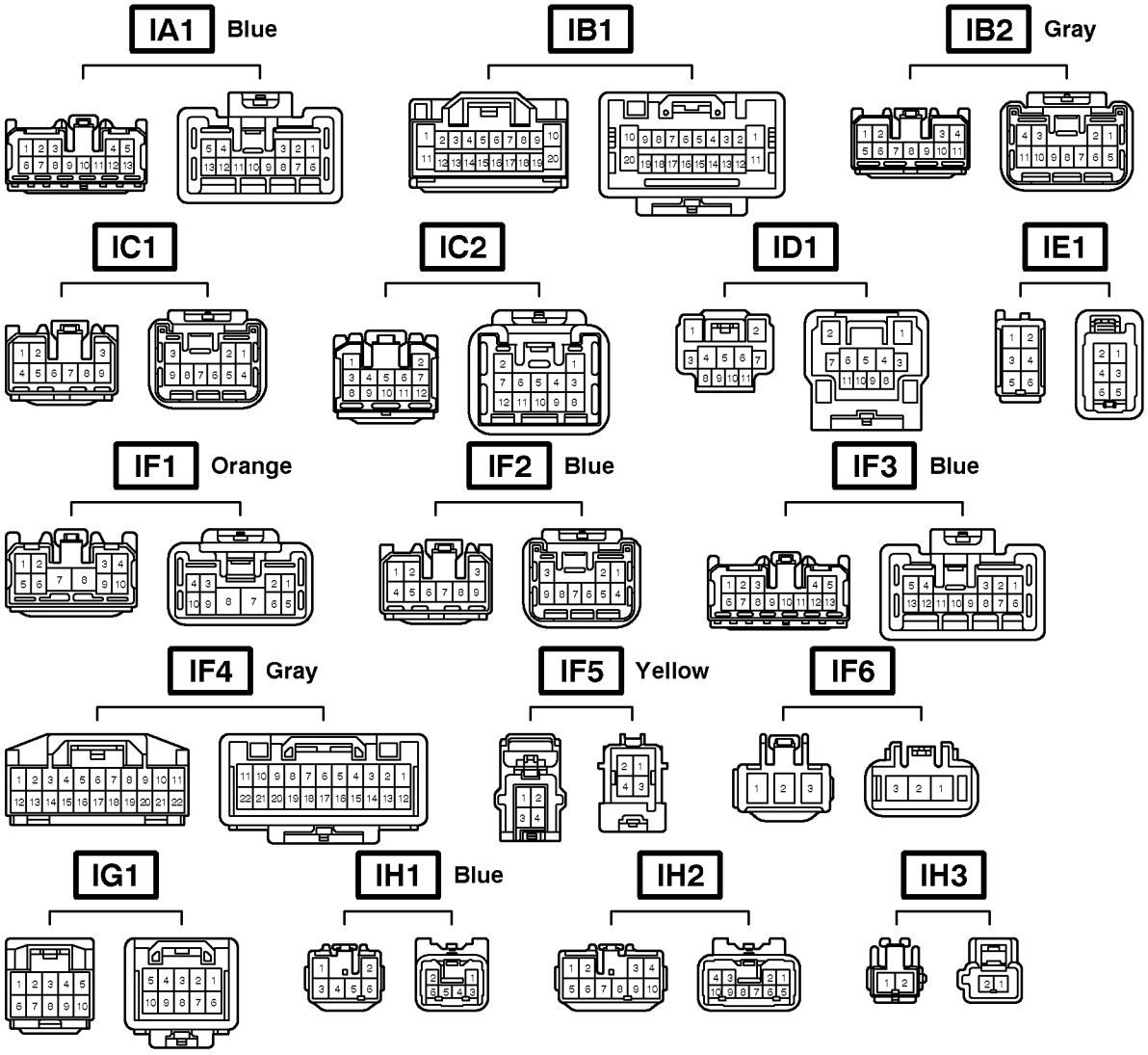


| Code | Joining Wire Harness and Wire Harness (Connector Location) |
|---|---|
| IA1 | Front Door LH Wire and Floor Wire (Left Kick Panel) |
| IB1 | Front Door LH Wire and Instrument Panel Wire (Left Kick Panel) |
| IB2 | |
| IC1 | Instrument Panel Wire and Floor Wire (Left Kick Panel) |
| IC2 | |
| ID1 | Engine Room Main Wire and Floor Wire (Left Side of Driver Side J/B) |
| IE1 | Instrument Panel Wire and Roof Wire (Inside of Front Left Pillar) |
| IF1 | Engine Room Main Wire and Instrument Panel Wire (Right Side of Steering Column Tube) |
| IF2 | |
| IF3 | |
| IF4 | |
| IF5 | |
| IF6 | |
| IG1 | Instrument Panel Wire and Engine Room Main Wire (Instrument Panel Brace LH) |
| IH1 | Instrument Panel Wire and Instrument Panel No.2 Wire (Instrument Panel Brace RH) |
| IH2 | |
| IH3 | |

## : Location of Connector Joining Wire Harness and Wire Harness

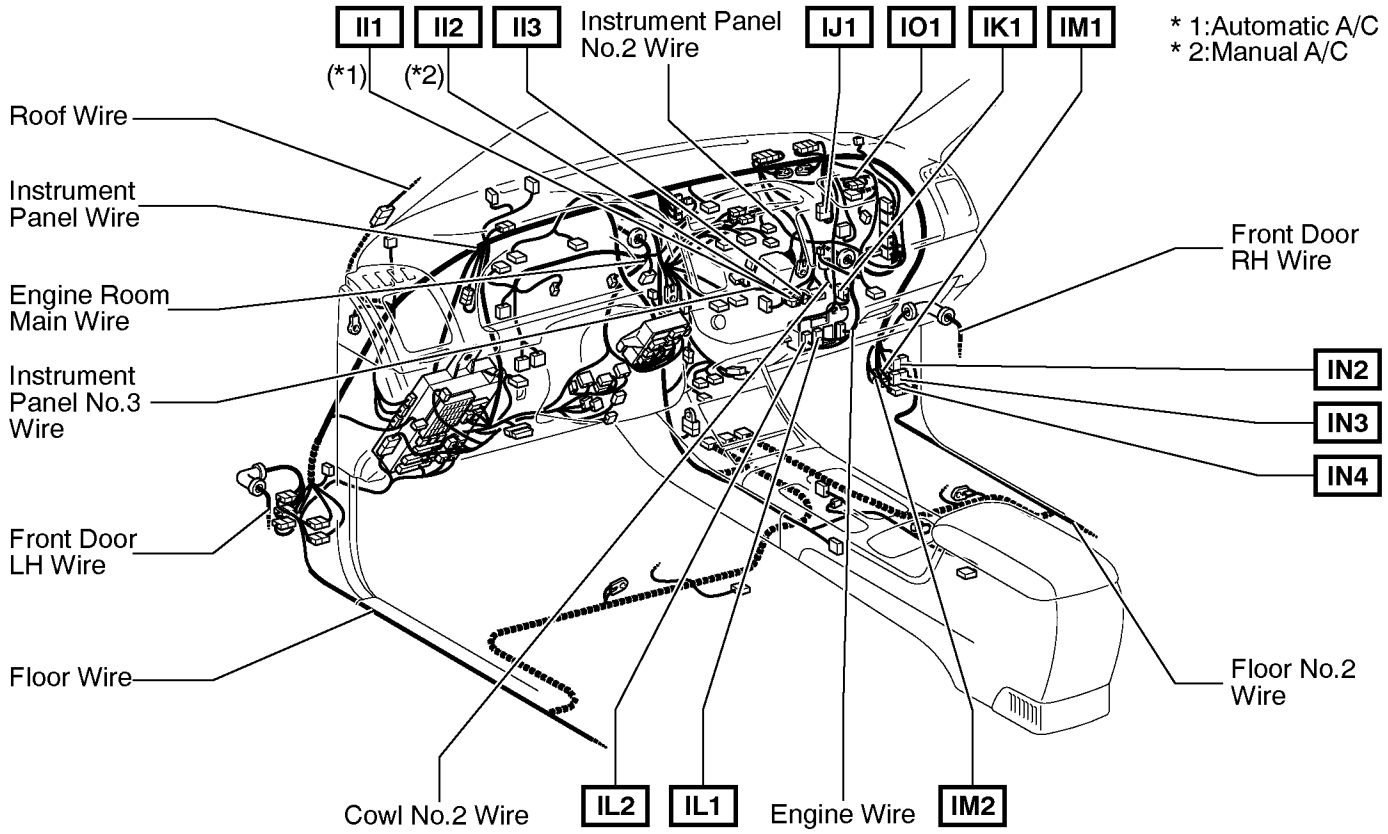


## : Location of Splice Points

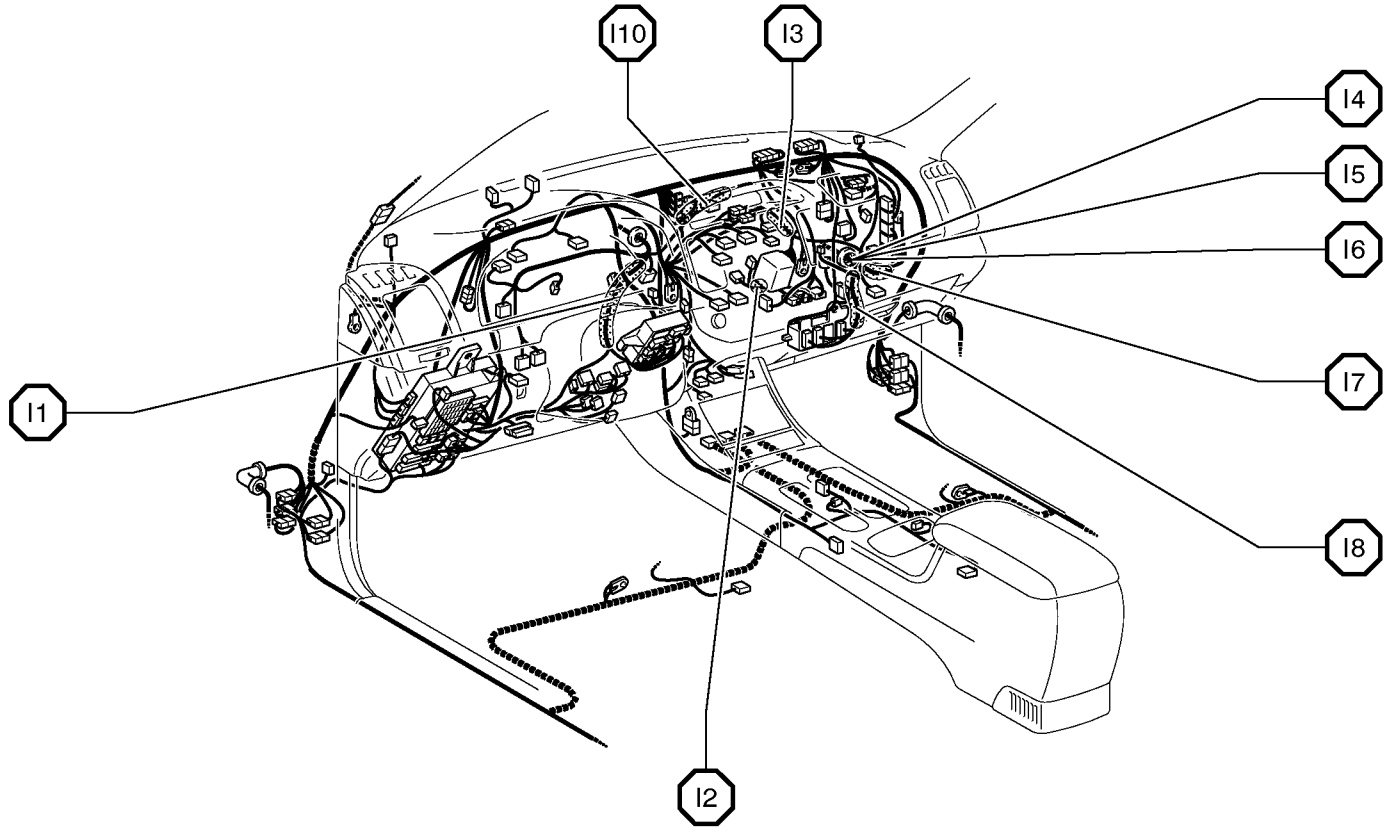

## Connector Joining Wire Harness and Wire Harness

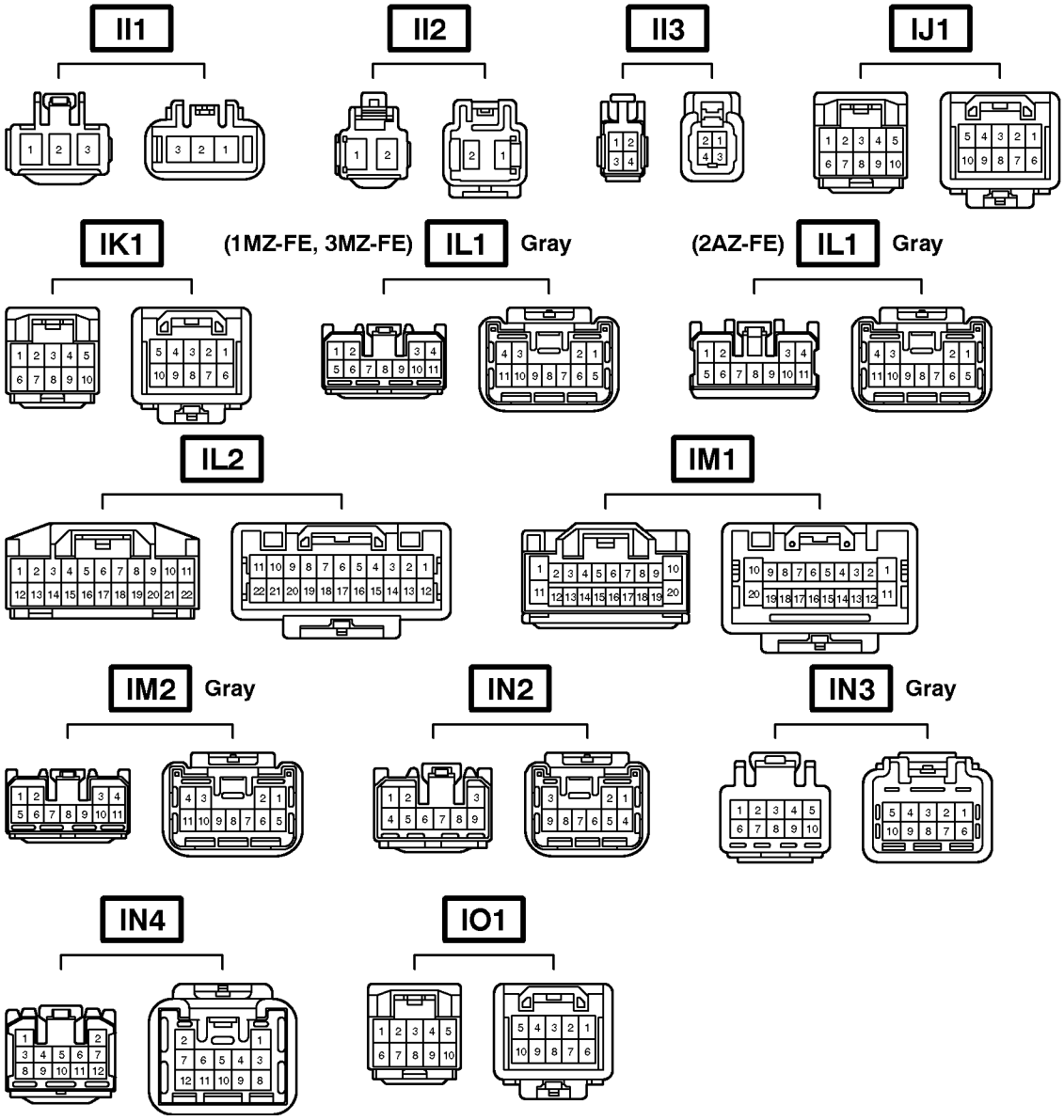


| Code | Joining Wire Harness and Wire Harness (Connector Location) |
|---|---|
| II1 | Instrument Panel Wire and Instrument Panel No.3 Wire (Behind the Glove Box) |
| II2 | |
| II3 | |
| IJ1 | Instrument Panel Wire and Instrument Panel Wire (Instrument Panel Reinforcement RH) |
| IK1 | Instrument Panel Wire and Cowl No.2 Wire (Behind the Glove Box) |
| IL1 | Engine Wire and Instrument Panel Wire (Behind the Glove Box) |
| IL2 | |
| IM1 | Front Door RH Wire and Instrument Panel Wire (Right Kick Panel) |
| IM2 | |
| IN2 | Instrument Panel Wire and Floor No.2 Wire (Right Kick Panel) |
| IN3 | |
| IN4 | |
| IO1 | Engine Room Main Wire and Engine Room Main Wire (Right Side of the Instrument Panel) |

▭ : Location of Connector Joining Wire Harness and Wire Harness

▽ : Location of Ground Points

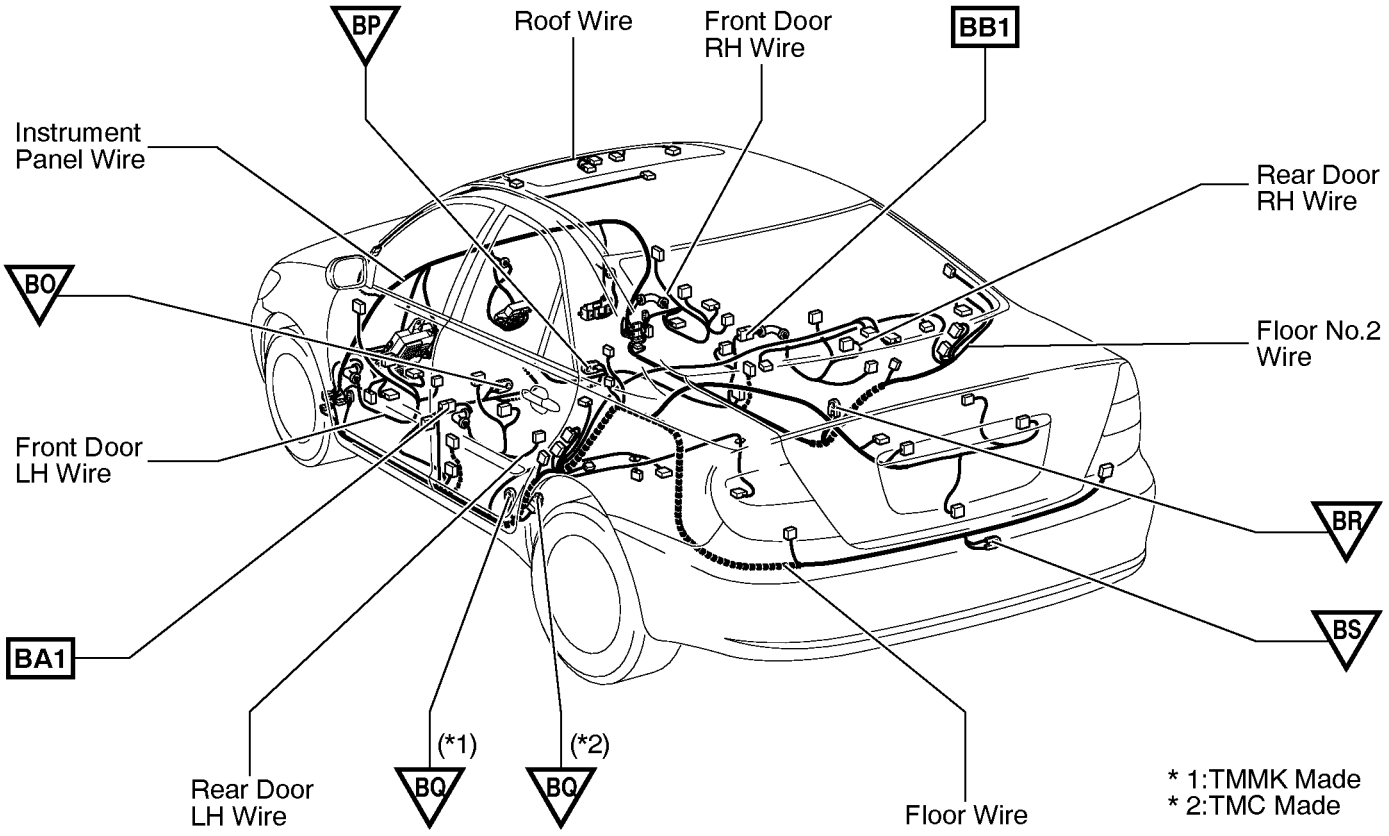


⬡ : Location of Splice Points

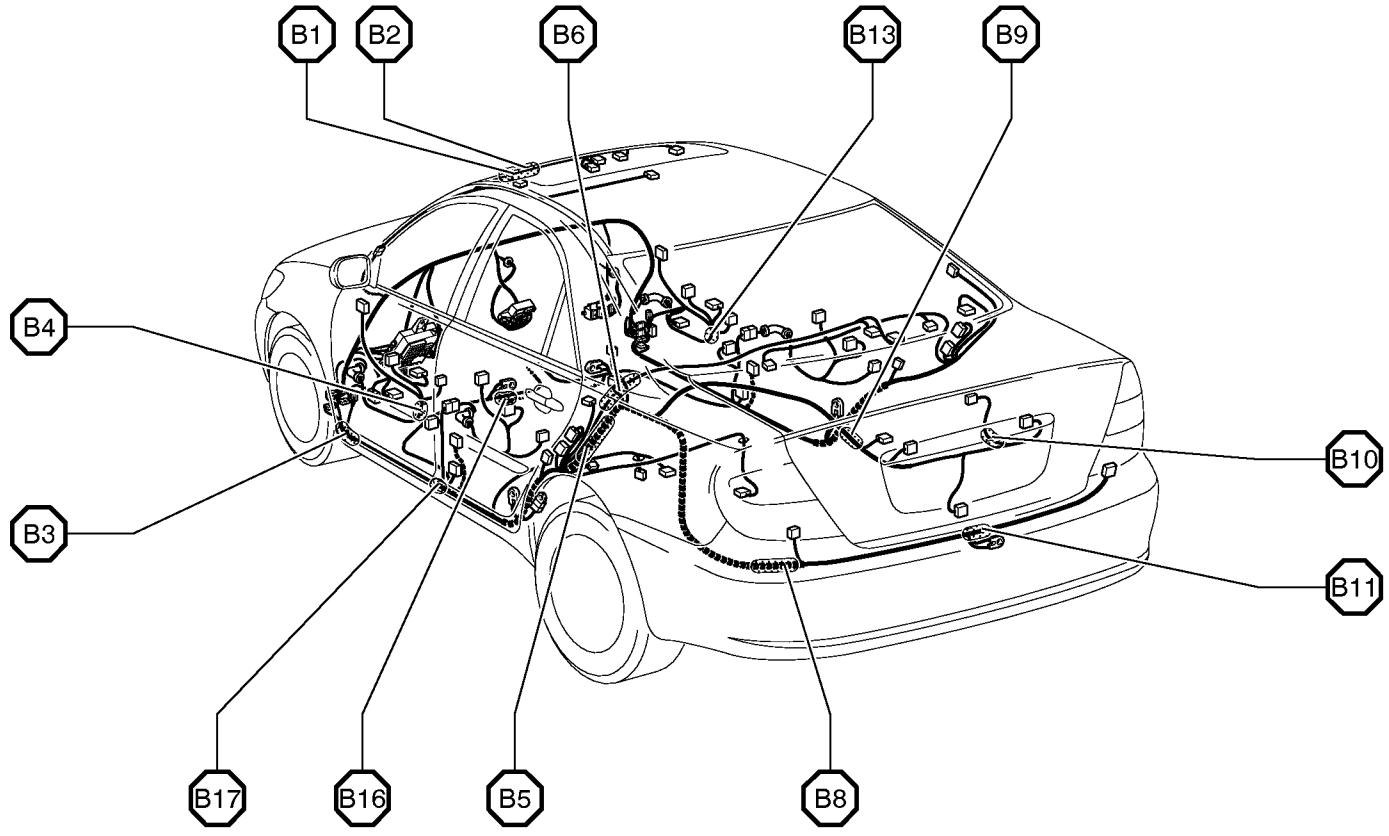

## Connector Joining Wire Harness and Wire Harness

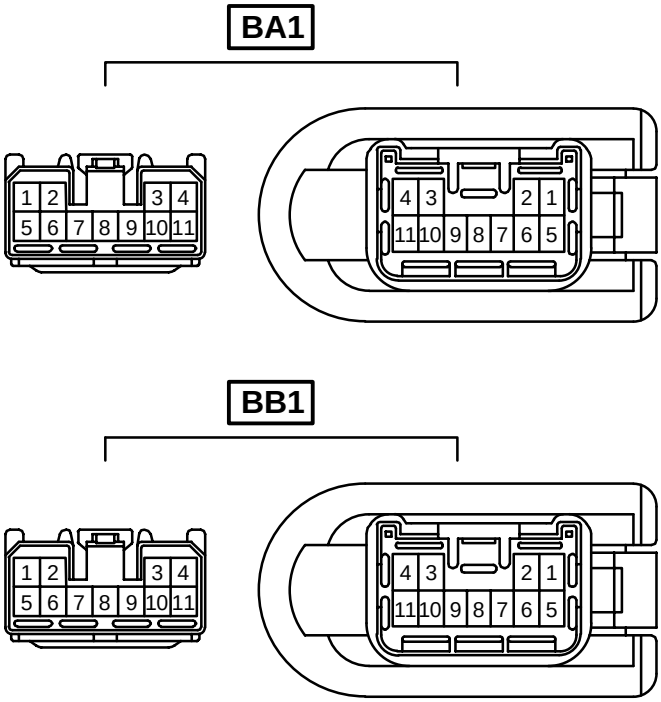


| Code | Joining Wire Harness and Wire Harness (Connector Location) |
|---|---|
| BA1 | Rear Door LH Wire and Floor Wire (Left Center Pillar) |
| BB1 | Rear Door RH Wire and Floor No.2 Wire (Right Center Pillar) |

▭ : Location of Connector Joining Wire Harness and Wire Harness

## [w/ Power Seat]

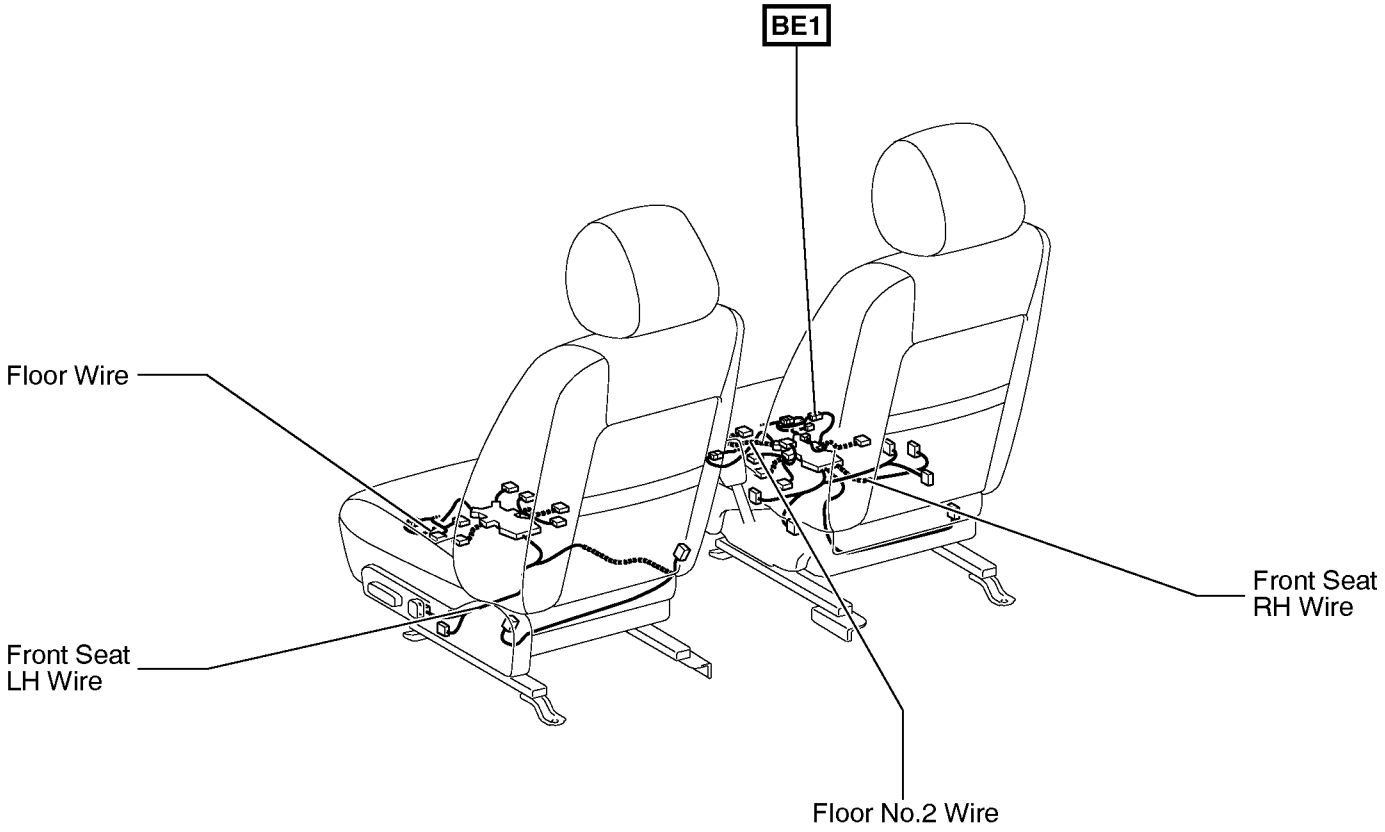

# Connector Joining Wire Harness and Wire Harness

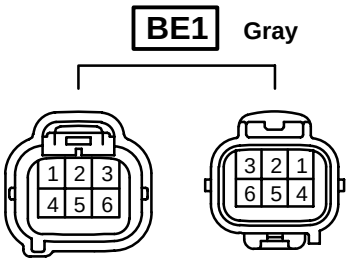


| Code | Joining Wire Harness and Wire Harness (Connector Location) |
|---|---|
| BE1 | Floor No.2 Wire and Front Seat RH Wire (Under the Front Passenger's Seat) |

# 2005 CAMRY ELECTRICAL WIRING DIAGRAM SYSTEM CIRCUITS


| | Page |
|---|---|
| ABS (TMC Made) | 176 |
| ABS (TMMK Made) | 180 |
| Audio System (Built-in Type Amplifier w/o Navigation System) | 258 |
| Audio System (Separate Type Amplifier w/o Navigation System) | 254 |
| Audio System (w/ Navigation System) | 250 |
| Automatic Air Conditioning (1MZ-FE) | 272 |
| Automatic Air Conditioning (2AZ-FE) | 278 |
| Automatic Glare-Resistant EC Mirror | 230 |
| Automatic Light Control | 128 |
| Back-Up Light | 148 |
| Charging | 72 |
| Cigarette Lighter | 234 |
| Clock | 246 |
| Combination Meter | 260 |
| Cruise Control (1MZ-FE, 3MZ-FE) | 192 |
| Cruise Control (2AZ-FE) | 198 |
| Door Lock Control | 152 |
| Electronically Controlled Transmission and A/T Indicator (1MZ-FE, 3MZ-FE) | 204 |
| Electronically Controlled Transmission and A/T Indicator (2AZ-FE) | 210 |
| Engine Control (1MZ-FE, 3MZ-FE) | 74 |
| Engine Control (2AZ-FE) | 86 |
| Engine Immobilizer System | 100 |
| Fog Light | 126 |
| Garage Door Opener | 232 |
| Ground Point | 296 |
| Headlight | 120 |
| Horn | 236 |
| Ignition (1MZ-FE, 3MZ-FE) | 64 |
| Ignition (2AZ-FE) | 68 |
| Illumination | 138 |
| Interior Light | 134 |
| Key Reminder | 150 |
| Light Auto Turn Off System | 130 |
| Manual Air Conditioning (1MZ-FE, 3MZ-FE) | 284 |
| Manual Air Conditioning (2AZ-FE) | 290 |
| Mirror Heater | 242 |
| Moon Roof | 164 |
| Multiplex Communication System (BEAN) | 104 |
| Multiplex Communication System (BEAN Bus) | 102 |
| Multiplex Communication System (CAN Bus) | 118 |
| Navigation System | 250 |
| Power Adjustable Pedals | 244 |
| Power Outlet | 234 |
| Power Seat | 218 |
| Power Source | 60 |
| Power Window | 166 |

| | Page |
|---|---|
| Radiator Fan and Condenser Fan | 266 |
| Rear Window Defogger | 242 |
| Remote Control Mirror | 228 |
| Seat Belt Warning | 224 |
| Seat Heater | 222 |
| Shift Lock | 216 |
| SRS | 185 |
| Starting (1MZ-FE, 3MZ-FE) | 64 |
| Starting (2AZ-FE) | 68 |
| Stop Light | 146 |
| Taillight | 144 |
| Theft Deterrent | 152 |
| Turn Signal and Hazard Warning Light | 142 |
| VSC | 170 |
| Wiper and Washer | 238 |
| Wireless Door Lock Control | 158 |


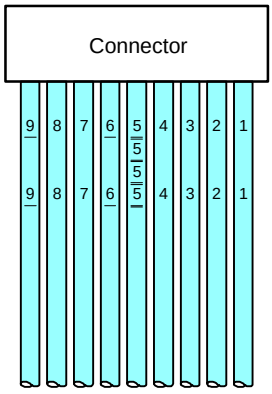


There are two types of wire harness for the instrument panel on CARMY.

Type A : The wire harness that uses the color-coded wire.
Type B : The wire harness that uses the same colored wire. (Not color-coded)

In case of using the same colored wires, each terminal number is printed on the wire as shown in the illustration on the left in order to distinguish each wiring.
Be sure to connect the terminal to the same place as indicated by the terminal number printed on the wire after disconnecting the terminal from the connector.

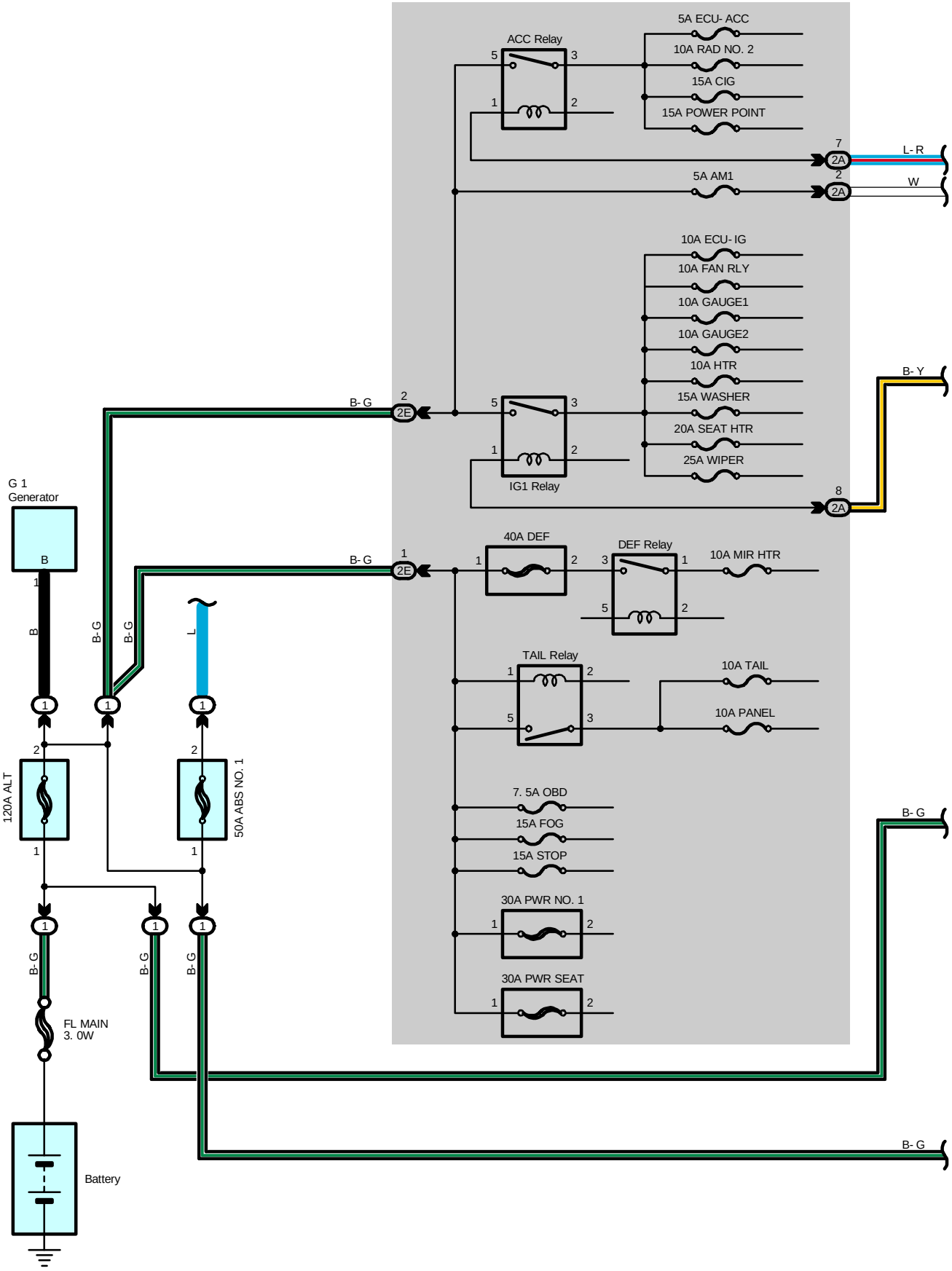
5A ECU- ACC
ACC Relay
10A RAD NO. 2
15A CIG
15A POWER POINT
7
2A
L- R
5A AM1
2
2A
W
10A ECU- IG
10A FAN RLY
10A GAUGE1
10A GAUGE2
10A HTR
B- Y
B- G
2
2E
15A WASHER
20A SEAT HTR
25A WIPER
IG1 Relay
8
2A
G 1
Generator
B
40A DEF
DEF Relay
10A MIR HTR
B- G
1
2E
TAIL Relay
10A TAIL
10A PANEL
7. 5A OBD
15A FOG
15A STOP
30A PWR NO. 1
30A PWR SEAT
B- G
B
L
120A ALT
50A ABS NO. 1
FL MAIN
3. 0W
Battery
B- G
B- G

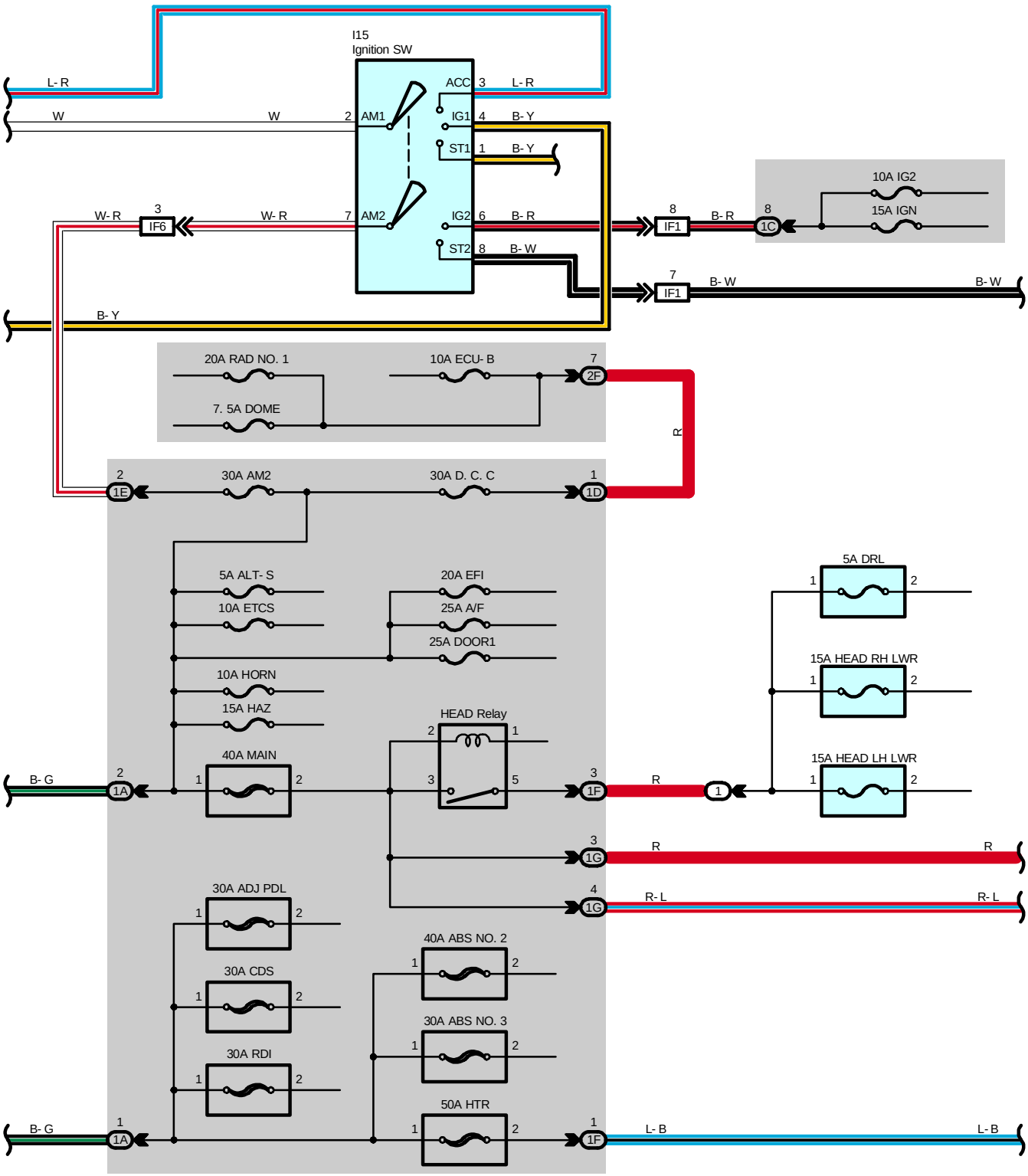
I15
Ignition SW
ACC
AM1
IG1
ST1
AM2
IG2
ST2
L- R
W
W- R
B- Y
B- R
B- W
IF6
IF1
1C
10A IG2
15A IGN
20A RAD NO. 1
7. 5A DOME
10A ECU- B
2F
1E
1D
30A AM2
30A D. C. C
5A ALT- S
10A ETCS
20A EFI
25A A/F
25A DOOR1
10A HORN
15A HAZ
40A MAIN
HEAD Relay
B- G
1A
1F
1G
5A DRL
15A HEAD RH LWR
15A HEAD LH LWR
R
R- L
30A ADJ PDL
30A CDS
30A RDI
40A ABS NO. 2
30A ABS NO. 3
50A HTR
L- B

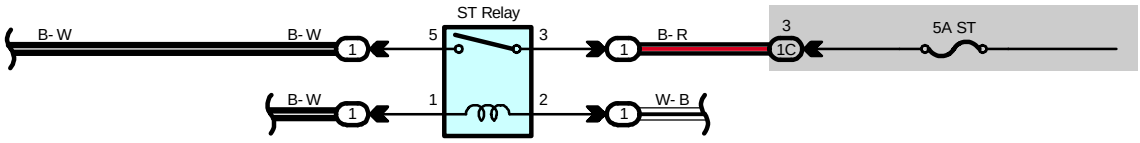
ST Relay
B- W
B- W
5
3
B- R
3
5A ST
1C
B- W
1
2
W- B

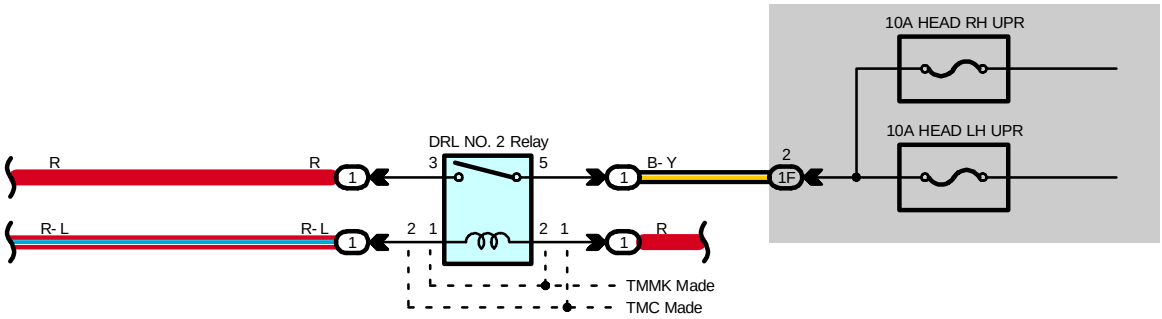
10A HEAD RH UPR
10A HEAD LH UPR
DRL NO. 2 Relay
R
R
3
5
B- Y
2
1F
R- L
R- L
2 1
2 1
R
TMMK Made
TMC Made

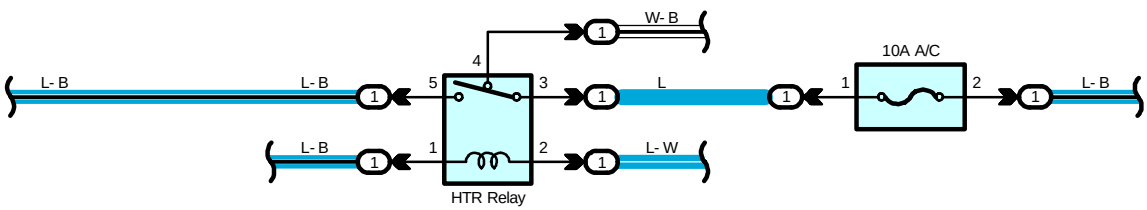
W- B
10A A/C
L- B
L- B
4
5
3
L
1
2
L- B
L- B
1
2
L- W
HTR Relay

**Service Hints**

**I15 Ignition SW**

2-3 : Closed with the ignition SW at ACC or ON position
2-4 : Closed with the ignition SW at ON or ST position
2-1 : Closed with the ignition SW at ST position
7-6 : Closed with the ignition SW at ON or ST position
7-8 : Closed with the ignition SW at ST position

**TAIL Relay**

5-3 : Closed with the light control SW at HEAD or TAIL position

**HEAD Relay**

5-3 : Closed with the light control SW at HEAD position or dimmer SW at FLASH position
Closed with the engine running and parking brake released (Parking brake SW off)

**○ : Parts Location**

| Code | See Page | Code | See Page | Code | See Page |
|---|---|---|---|---|---|
| G1 | 36 (*1) | G1 | 38 (*2) | I15 | 41 |

**⬭ : Relay Blocks**

| Code | See Page | Relay Blocks (Relay Block Location) |
|---|---|---|
| 1 | 22 | Engine Room R/B (Engine Compartment Left) |

**⬭ : Junction Block and Wire Harness Connector**

| Code | See Page | Junction Block and Wire Harness (Connector Location) |
|---|---|---|
| 1A | 25 | Engine Room Main Wire and Engine Room J/B (Engine Compartment Left) |
| 1C | | |
| 1D | | |
| 1E | | |
| 1F | | |
| 1G | | |
| 2A | 28 | Instrument Panel Wire and Driver Side J/B (Lower Finish Panel) |
| 2E | 28 | Engine Room Main Wire and Driver Side J/B (Lower Finish Panel) |
| 2F | | |

**▭ : Connector Joining Wire Harness and Wire Harness**

| Code | See Page | Joining Wire Harness and Wire Harness (Connector Location) |
|---|---|---|
| IF1 | 50 | Engine Room Main Wire and Instrument Panel Wire (Right Side of Steering Column Tube) |
| IF6 | | |

* 1 : 1MZ-FE, 3MZ-FE * 2 : 2AZ-FE * 3 : w/ Power Seat * 4 : w/o Power Seat

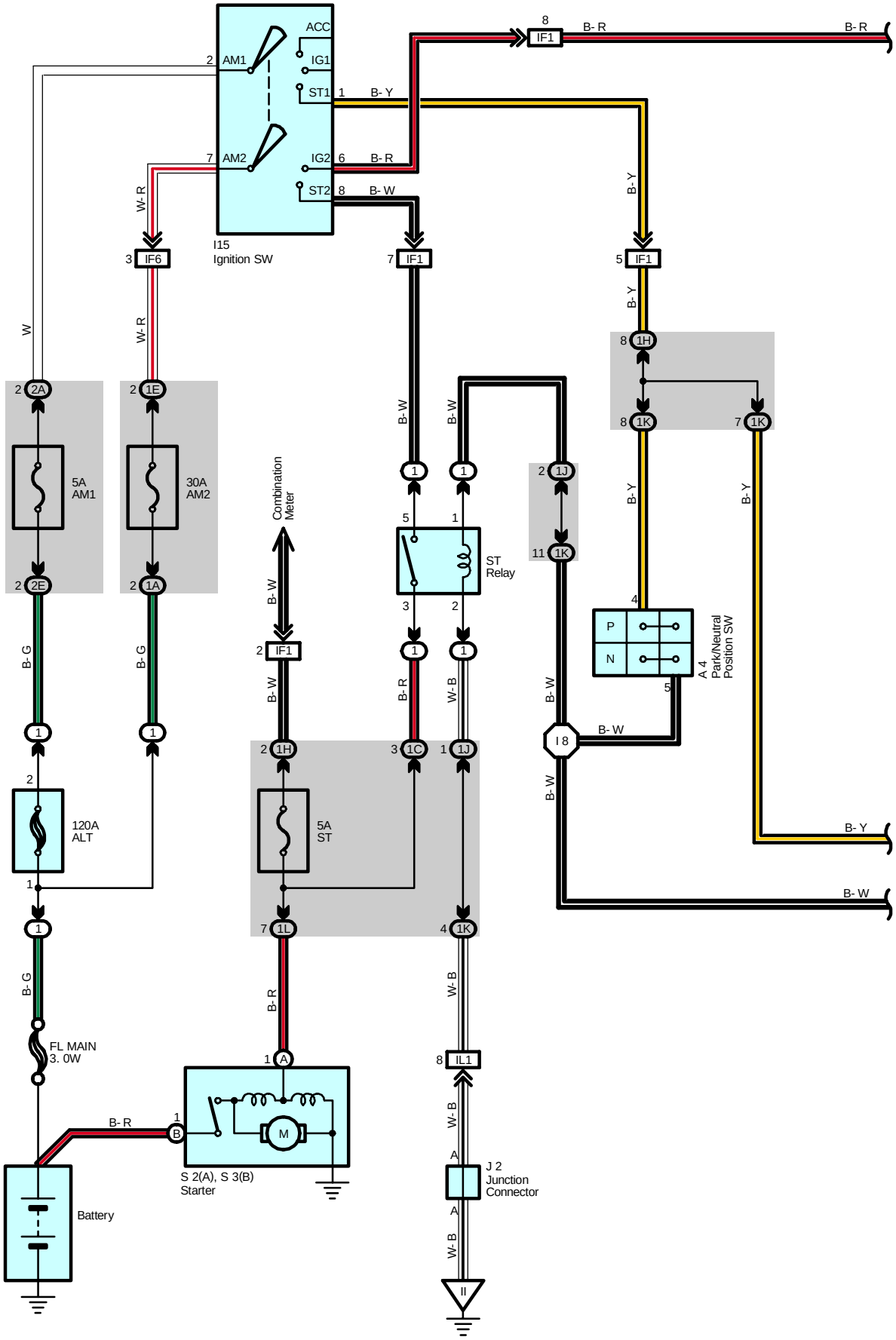
ACC
AM1
IG1
ST1
AM2
IG2
ST2
I15
Ignition SW
8 IF1 B- R
B- R
1 B- Y
6 B- R
8 B- W
B- Y
W- R
3 IF6
7 IF1
5 IF1
W
W- R
B- Y
8 1H
8 1K
7 1K
2 2A
2 1E
B- W
B- W
2 1J
11 1K
5A
AM1
30A
AM2
Combination
Meter
5
1
ST
Relay
3
2
2 2E
2 1A
B- G
B- G
B- Y
B- Y
4
P
N
A 4
Park/Neutral
Position SW
5
B- W
I 8
B- W
B- W
B- W
2 IF1
B- W
B- R
W- B
2 1H
3 1C
1 1J
B- Y
120A
ALT
5A
ST
B- W
7 1L
4 1K
B- G
B- R
W- B
FL MAIN
3. 0W
1 A
8 IL1
B- R
1 B
M
W- B
A
J 2
Junction
Connector
S 2(A), S 3(B)
Starter
A
W- B
Battery
II

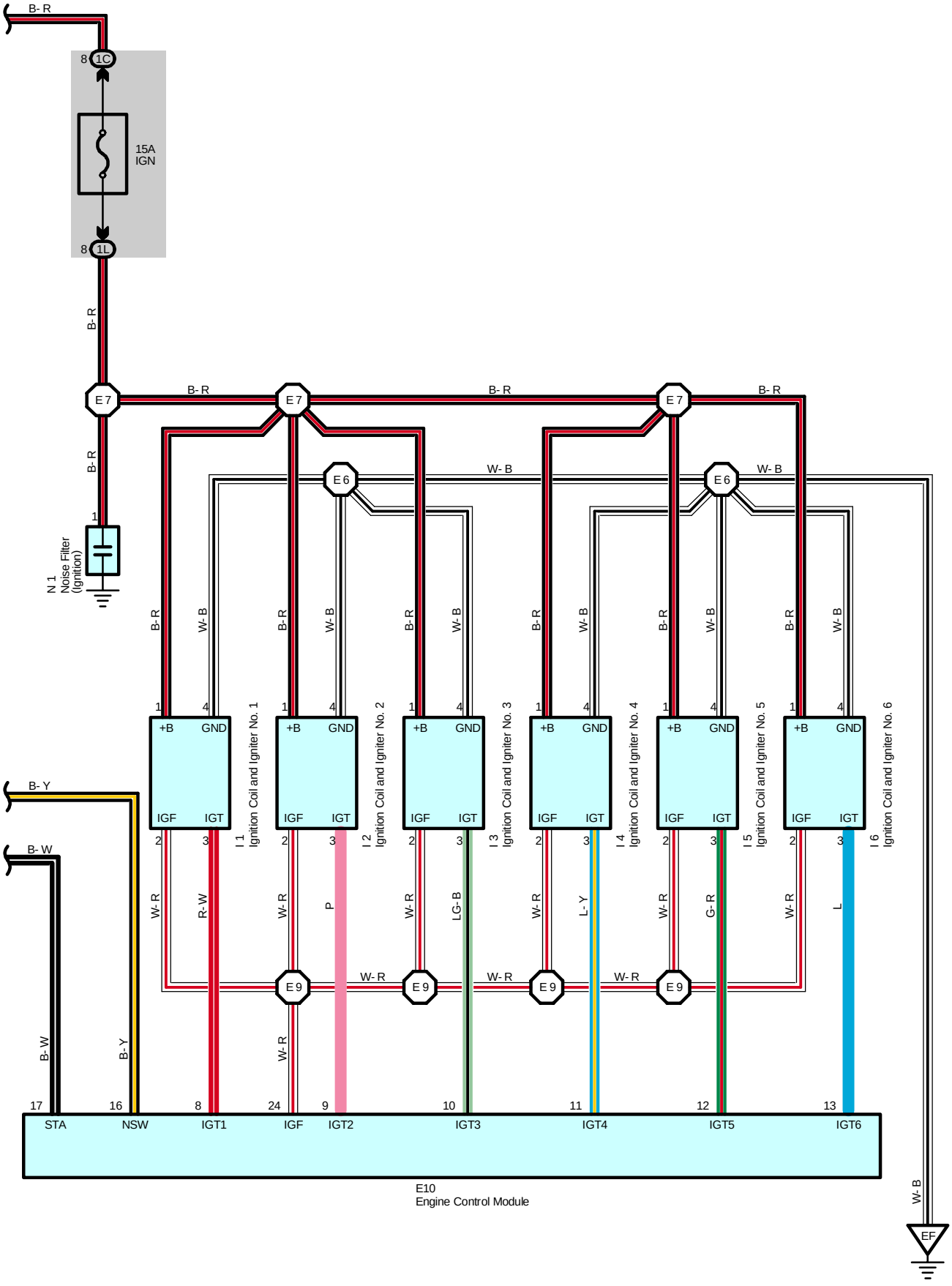
B- R
8 1C
15A
IGN
8 1L
B- R
E 7
B- R
E 7
B- R
E 7
B- R
B- R
E 6
W- B
E 6
W- B
1
N 1
Noise Filter
(Ignition)
B- R
W- B
B- R
W- B
B- R
W- B
B- R
W- B
B- R
W- B
1
4
+B
GND
IGF
IGT
2
3
I 1
Ignition Coil and Igniter No. 1
I 2
Ignition Coil and Igniter No. 2
I 3
Ignition Coil and Igniter No. 3
I 4
Ignition Coil and Igniter No. 4
I 5
Ignition Coil and Igniter No. 5
I 6
Ignition Coil and Igniter No. 6
B- Y
B- W
W- R
R- W
W- R
P
W- R
LG- B
W- R
L- Y
W- R
G- R
W- R
L
E 9
W- R
E 9
W- R
E 9
W- R
E 9
B- W
B- Y
W- R
17
16
8
24
9
10
11
12
13
STA
NSW
IGT1
IGF
IGT2
IGT3
IGT4
IGT5
IGT6
E10
Engine Control Module
W- B
EF

# Starting and Ignition for 1MZ-FE and 3MZ-FE

**Service Hints**

**I15 Ignition SW**

2-1 : Closed with the ignition SW at ST position
7-6 : Closed with the ignition SW at ON or ST position
7-8 : Closed with the ignition SW at ST position

**A4 Park/Neutral Position SW**

4-5 : Closed with the A/T shift lever in P or N position

**S2 (A), S3 (B) Starter**

Point closed with the Park/Neutral position SW at P or N position and the ignition SW at ST position

**: Parts Location**

| Code | See Page | Code | See Page | Code | | See Page |
|---|---|---|---|---|---|---|
| A4 | 36 (*1) | I4 | 37 (*1) | N1 | | 37 (*1) |
| E10 | 40 | I5 | 37 (*1) | S2 | A | 37 (*1) |
| I1 | 37 (*1) | I6 | 37 (*1) | S3 | B | 37 (*1) |
| I2 | 37 (*1) | I15 | 41 | | | |
| I3 | 37 (*1) | J2 | 41 | | | |

**: Relay Blocks**

| Code | See Page | Relay Blocks (Relay Block Location) |
|---|---|---|
| 1 | 22 | Engine Room R/B (Engine Compartment Left) |

**: Junction Block and Wire Harness Connector**

| Code | See Page | Junction Block and Wire Harness (Connector Location) |
|---|---|---|
| 1A | 25 | Engine Room Main Wire and Engine Room J/B (Engine Compartment Left) |
| 1C | | |
| 1E | | |
| 1H | | |
| 1J | | |
| 1K | 25 | Engine Wire and Engine Room J/B (Engine Compartment Left) |
| 1L | | |
| 2A | 28 | Instrument Panel Wire and Driver Side J/B (Lower Finish Panel) |
| 2E | 28 | Engine Room Main Wire and Driver Side J/B (Lower Finish Panel) |

**: Connector Joining Wire Harness and Wire Harness**

| Code | See Page | Joining Wire Harness and Wire Harness (Connector Location) |
|---|---|---|
| IF1 | 50 | Engine Room Main Wire and Instrument Panel Wire (Right Side of Steering Column Tube) |
| IF6 | | |
| IL1 | 52 | Engine Wire and Instrument Panel Wire (Behind the Glove Box) |

**: Ground Points**

| Code | See Page | Ground Points Location |
|---|---|---|
| EF | 46 (*1) | Right Side of Cylinder Head |
| II | 50 | Cowl Side Panel LH |

**: Splice Points**

| Code | See Page | Wire Harness with Splice Points | Code | See Page | Wire Harness with Splice Points |
|---|---|---|---|---|---|
| E6 | 46 (*1) | Engine Wire | E9 | 46 (*1) | Engine Wire |
| E7 | | | I8 | 52 | |

* 1 : 1MZ-FE, 3MZ-FE * 2 : 2AZ-FE * 3 : w/ Power Seat * 4 : w/o Power Seat

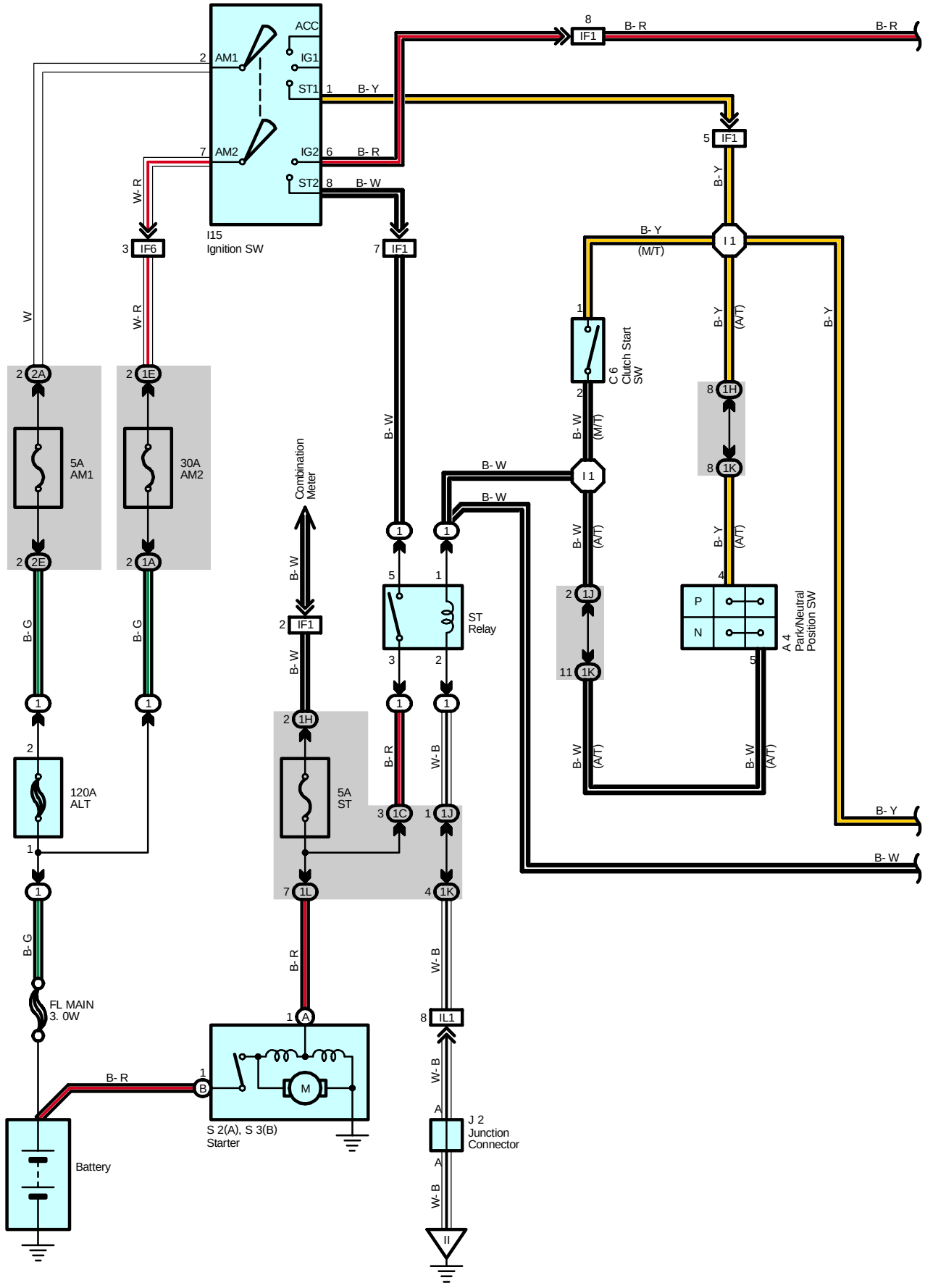
ACC
IG1
ST1
AM1
AM2
IG2
ST2
I15
Ignition SW
IF1
IF6
B- R
B- Y
B- W
W- R
W
5A
AM1
30A
AM2
120A
ALT
FL MAIN
3. 0W
Battery
S 2(A), S 3(B)
Starter
Combination
Meter
5A
ST
ST
Relay
C 6
Clutch Start
SW
(M/T)
(A/T)
I 1
J 2
Junction
Connector
IL1
P
N
A 4
Park/Neutral
Position SW

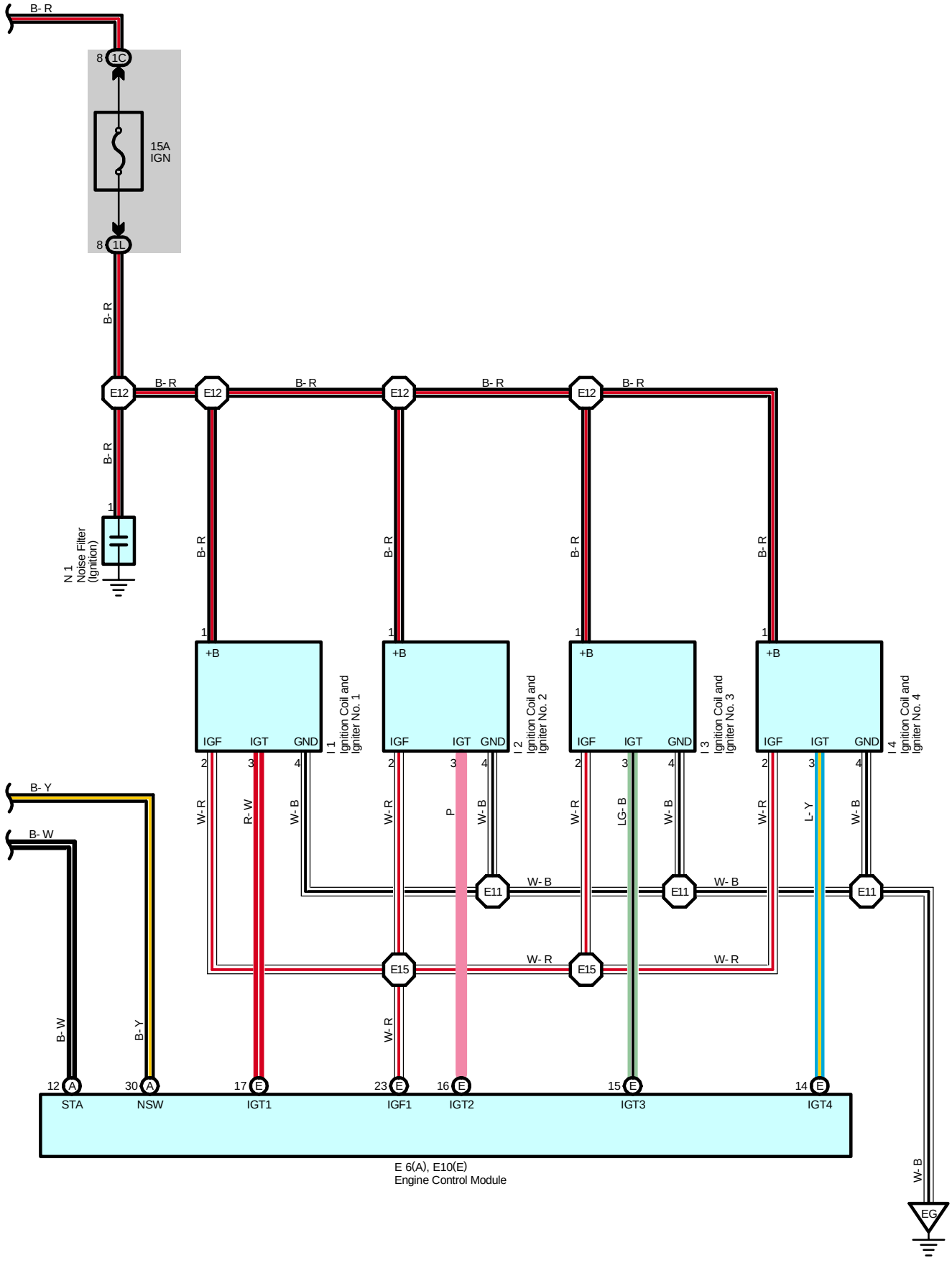
B- R
8
1C
15A
IGN
8
1L
B- R
E12
B- R
E12
B- R
E12
B- R
E12
B- R
1
N 1
Noise Filter
(Ignition)
B- R
B- R
B- R
B- R
1
1
1
1
+B
IGF
IGT
GND
I 1
Ignition Coil and
Igniter No. 1
+B
IGF
IGT
GND
I 2
Ignition Coil and
Igniter No. 2
+B
IGF
IGT
GND
I 3
Ignition Coil and
Igniter No. 3
+B
IGF
IGT
GND
I 4
Ignition Coil and
Igniter No. 4
2
3
4
W- R
R- W
W- B
2
3
4
W- R
P
W- B
2
3
4
W- R
LG- B
W- B
2
3
4
W- R
L- Y
W- B
B- Y
B- W
E11
W- B
E11
W- B
E11
E15
W- R
E15
W- R
B- W
B- Y
W- R
12
A
STA
30
A
NSW
17
E
IGT1
23
E
IGF1
16
E
IGT2
15
E
IGT3
14
E
IGT4
E 6(A), E10(E)
Engine Control Module
W- B
EG

# Starting and Ignition for 2AZ-FE

**Service Hints**

**I15 Ignition SW**

2-1 : Closed with the ignition SW at ST position
7-6 : Closed with the ignition SW at ON or ST position
7-8 : Closed with the ignition SW at ST position

**A4 Park/Neutral Position SW (A/T)**

4-5 : Closed with the A/T shift lever in P or N position

**S2 (A), S3 (B) Starter**

Point closed with the Park/Neutral position SW at P or N position and the ignition SW at ST position (A/T)
Point closed with the clutch start SW on and the ignition SW at ST position (M/T)

**: Parts Location**

| Code | See Page | Code | See Page | Code | See Page |
|---|---|---|---|---|---|
| A4 | 38 (*2) | I2 | 39 (*2) | N1 | 39 (*2) |
| C6 | 40 | I3 | 39 (*2) | S2 A | 39 (*2) |
| E6 A | 40 | I4 | 39 (*2) | S3 B | 39 (*2) |
| E10 E | 40 | I15 | 41 | | |
| I1 | 39 (*2) | J2 | 41 | | |

**: Relay Blocks**

| Code | See Page | Relay Blocks (Relay Block Location) |
|---|---|---|
| 1 | 22 | Engine Room R/B (Engine Compartment Left) |

**: Junction Block and Wire Harness Connector**

| Code | See Page | Junction Block and Wire Harness (Connector Location) |
|---|---|---|
| 1A | 25 | Engine Room Main Wire and Engine Room J/B (Engine Compartment Left) |
| 1C | | |
| 1E | | |
| 1H | | |
| 1J | | |
| 1K | 25 | Engine Wire and Engine Room J/B (Engine Compartment Left) |
| 1L | | |
| 2A | 28 | Instrument Panel Wire and Driver Side J/B (Lower Finish Panel) |
| 2E | 28 | Engine Room Main Wire and Driver Side J/B (Lower Finish Panel) |

**: Connector Joining Wire Harness and Wire Harness**

| Code | See Page | Joining Wire Harness and Wire Harness (Connector Location) |
|---|---|---|
| IF1 | 50 | Engine Room Main Wire and Instrument Panel Wire (Right Side of Steering Column Tube) |
| IF6 | | |
| IL1 | 52 | Engine Wire and Instrument Panel Wire (Behind the Glove Box) |

**: Ground Points**

| Code | See Page | Ground Points Location |
|---|---|---|
| EG | 48 (*2) | Left Side of Cylinder Head |
| II | 50 | Cowl Side Panel LH |

**: Splice Points**

| Code | See Page | Wire Harness with Splice Points | Code | See Page | Wire Harness with Splice Points |
|---|---|---|---|---|---|
| E11 | 48 (*2) | Engine Wire | E15 | 48 (*2) | Engine Wire |
| E12 | | | I1 | 52 | Engine Room Main Wire |

* 1 : 1MZ-FE, 3MZ-FE * 2 : 2AZ-FE * 3 : w/ Power Seat * 4 : w/o Power Seat

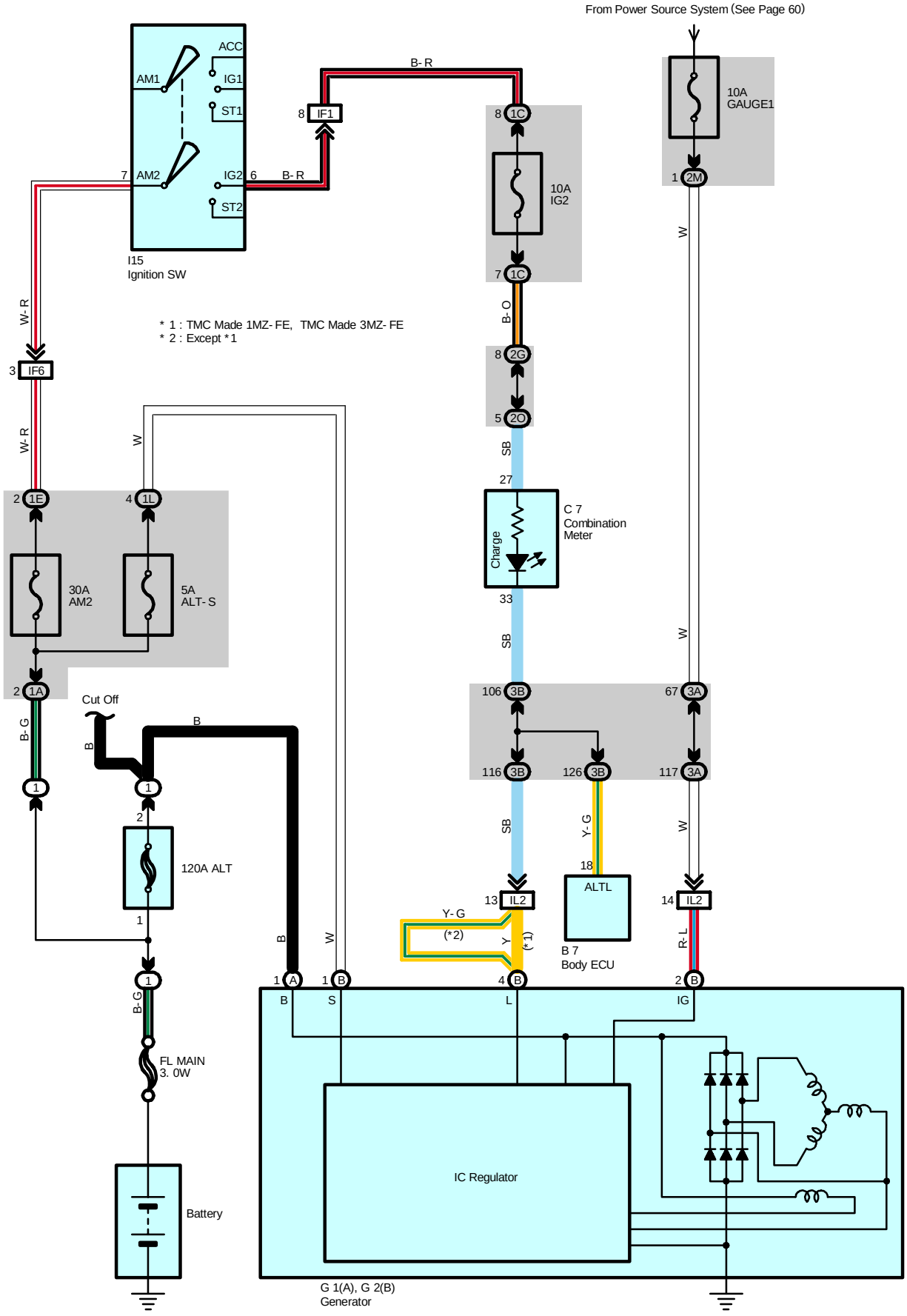
From Power Source System (See Page 60)
ACC
AM1
IG1
ST1
AM2
IG2
ST2
I15
Ignition SW
B- R
8 IF1
7
6
B- R
8 1C
10A
IG2
7 1C
10A
GAUGE1
1 2M
W
B- O
8 2G
5 2O
SB
27
C 7
Combination
Meter
Charge
33
SB
W
* 1 : TMC Made 1MZ- FE, TMC Made 3MZ- FE
* 2 : Except * 1
W- R
3 IF6
W- R
W
2 1E
4 1L
30A
AM2
5A
ALT- S
2 1A
B- G
1
Cut Off
B
B
1
2
120A ALT
1
B- G
1
FL MAIN
3. 0W
Battery
106 3B
67 3A
116 3B
126 3B
117 3A
SB
Y- G
W
18
ALTL
B 7
Body ECU
13 IL2
14 IL2
Y- G
(*2)
Y
(* 1)
R- L
B
W
1 A
1 B
4 B
2 B
B
S
L
IG
IC Regulator
G 1(A), G 2(B)
Generator

**Service Hints**

**G2 (B) Generator**

(B) 1-Ground : 13.9-15.1 volts with the engine running at 2000 rpm and 25˚C (77˚F)
13.5-14.3 volts with the engine running at 5000 rpm and 115˚C (239˚F)

(B) 4-Ground : 0-4 volts with the ignition SW at ON position and the engine not running

**○ : Parts Location**

| Code | | See Page | Code | | See Page | Code | See Page |
|---|---|---|---|---|---|---|---|
| B7 | | 40 | G1 | A | 38 (*2) | I15 | 41 |
| C7 | | 40 | G2 | B | 36 (*1) | | |
| G1 | A | 36 (*1) | | | 38 (*2) | | |

**⬭ : Relay Blocks**

| Code | See Page | Relay Blocks (Relay Block Location) |
|---|---|---|
| 1 | 22 | Engine Room R/B (Engine Compartment Left) |

**⬭ : Junction Block and Wire Harness Connector**

| Code | See Page | Junction Block and Wire Harness (Connector Location) |
|---|---|---|
| 1A | 25 | Engine Room Main Wire and Engine Room J/B (Engine Compartment Left) |
| 1C | | |
| 1E | | |
| 1L | 25 | Engine Wire and Engine Room J/B (Engine Compartment Left) |
| 2G | 28 | Engine Room Main Wire and Driver Side J/B (Lower Finish Panel) |
| 2M | 29 | Instrument Panel Wire and Driver Side J/B (Lower Finish Panel) |
| 2O | | |
| 3A | 34 | Instrument Panel Wire and Passenger Side J/B (Instrument Panel Brace RH) |
| 3B | | |

**▭ : Connector Joining Wire Harness and Wire Harness**

| Code | See Page | Joining Wire Harness and Wire Harness (Connector Location) |
|---|---|---|
| IF1 | 50 | Engine Room Main Wire and Instrument Panel Wire (Right Side of Steering Column Tube) |
| IF6 | | |
| IL2 | 52 | Engine Wire and Instrument Panel Wire (Behind the Glove Box) |

* 1 : 1MZ-FE, 3MZ-FE * 2 : 2AZ-FE * 3 : w/ Power Seat * 4 : w/o Power Seat

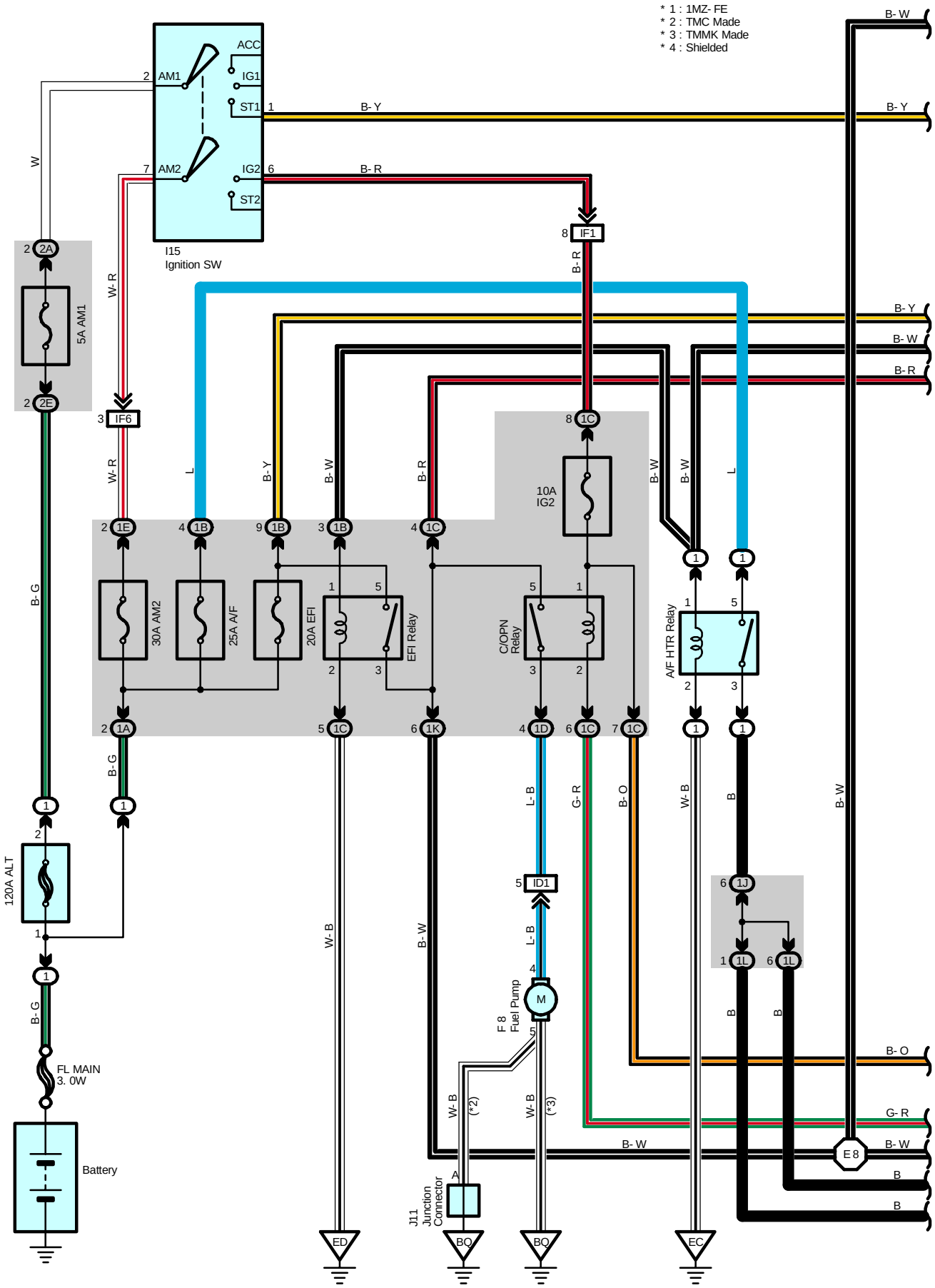
* 1 : 1MZ- FE
* 2 : TMC Made
* 3 : TMMK Made
* 4 : Shielded
I15
Ignition SW
ACC
IG1
ST1
AM1
AM2
IG2
ST2
IF1
IF6
2A
5A AM1
2E
1E
1B
1C
1A
1K
1D
1J
1L
10A IG2
30A AM2
25A A/F
20A EFI
EFI Relay
C/OPN Relay
A/F HTR Relay
120A ALT
FL MAIN 3. 0W
Battery
F 8 Fuel Pump
ID1
J11 Junction Connector
E 8
ED
BQ
EC
B- W
B- Y
B- R
W- R
B- G
L
L- B
G- R
B- O
W- B
B

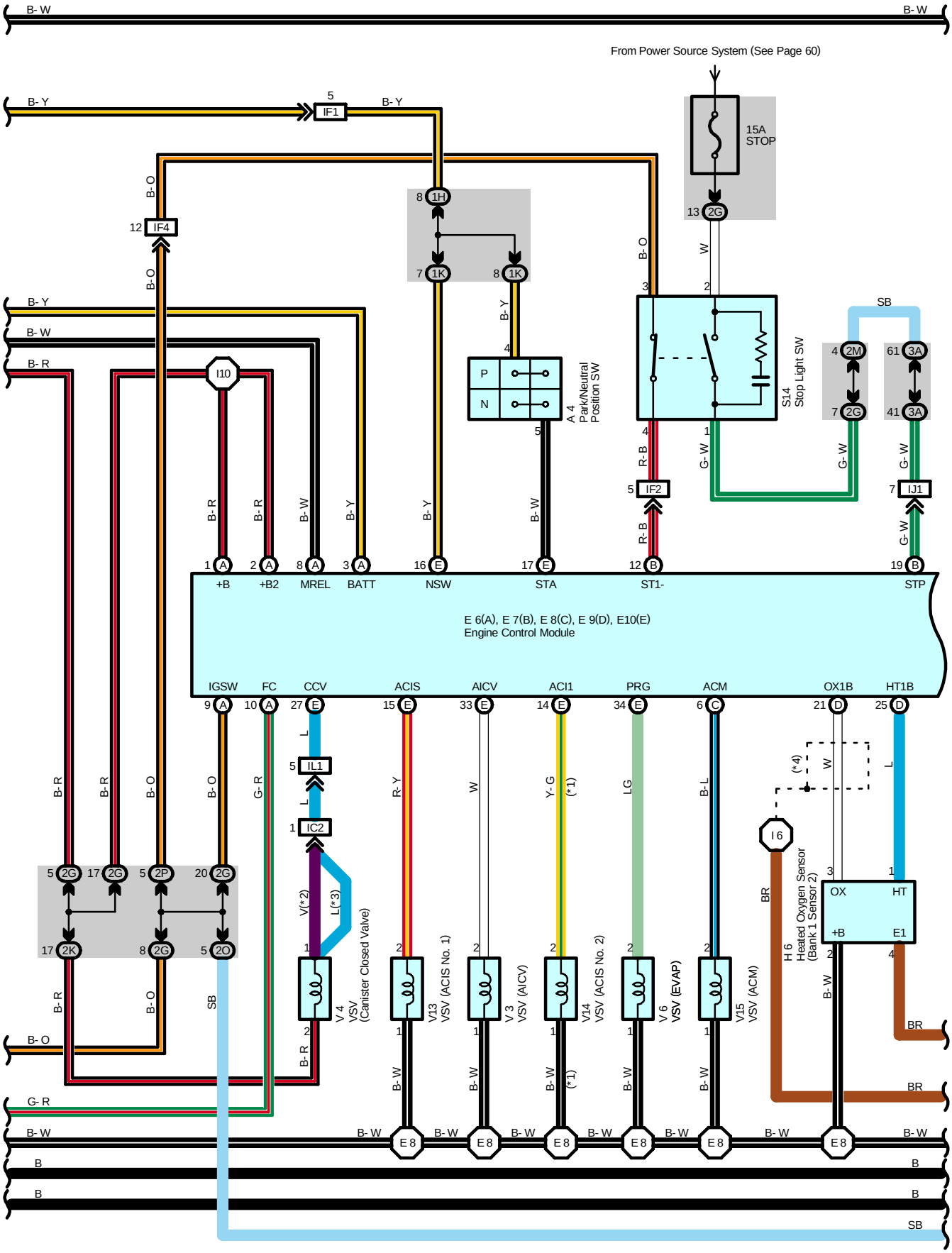
B- W
B- W
From Power Source System (See Page 60)
B- Y
5
IF1
B- Y
15A
STOP
13
2G
B- O
12
IF4
B- O
8
1H
7
1K
8
1K
W
2
B- O
3
B- Y
B- Y
B- W
B- R
I10
4
P
N
5
A 4
Park/Neutral
Position SW
S14
Stop Light SW
SB
4
2M
7
2G
61
3A
41
3A
G- W
G- W
G- W
4
R- B
1
5
IF2
R- B
7
IJ1
G- W
B- R
B- R
B- W
B- Y
B- Y
B- W
1
A
2
A
8
A
3
A
16
E
17
E
12
B
19
B
+B
+B2
MREL
BATT
NSW
STA
ST1-
STP
E 6(A), E 7(B), E 8(C), E 9(D), E10(E)
Engine Control Module
IGSW
FC
CCV
ACIS
AICV
ACI1
PRG
ACM
OX1B
HT1B
9
A
10
A
27
E
15
E
33
E
14
E
34
E
6
C
21
D
25
D
L
5
IL1
L
1
IC2
V(*2)
L(*3)
1
2
V 4
VSV
(Canister Closed Valve)
B- R
R- Y
2
1
V13
VSV (ACIS No. 1)
W
2
1
V 3
VSV (AICV)
Y- G
(*1)
2
1
V14
VSV (ACIS No. 2)
LG
2
1
V 6
VSV (EVAP)
B- L
2
1
V15
VSV (ACM)
(*4)
W
L
I 6
BR
H 6
Heated Oxygen Sensor
(Bank 1 Sensor 2)
3
OX
HT
+B
E1
1
2
4
B- W
BR
BR
B- R
B- O
B- R
B- O
B- O
B- R
B- O
SB
G- R
B- O
B- W
B- W
E 8
B- W
E 8
B- W
E 8
B- W
E 8
B- W
E 8
B- W
E 8
B- W
B
B
B
B
SB
5
2G
17
2G
5
2P
20
2G
17
2K
8
2G
5
2O

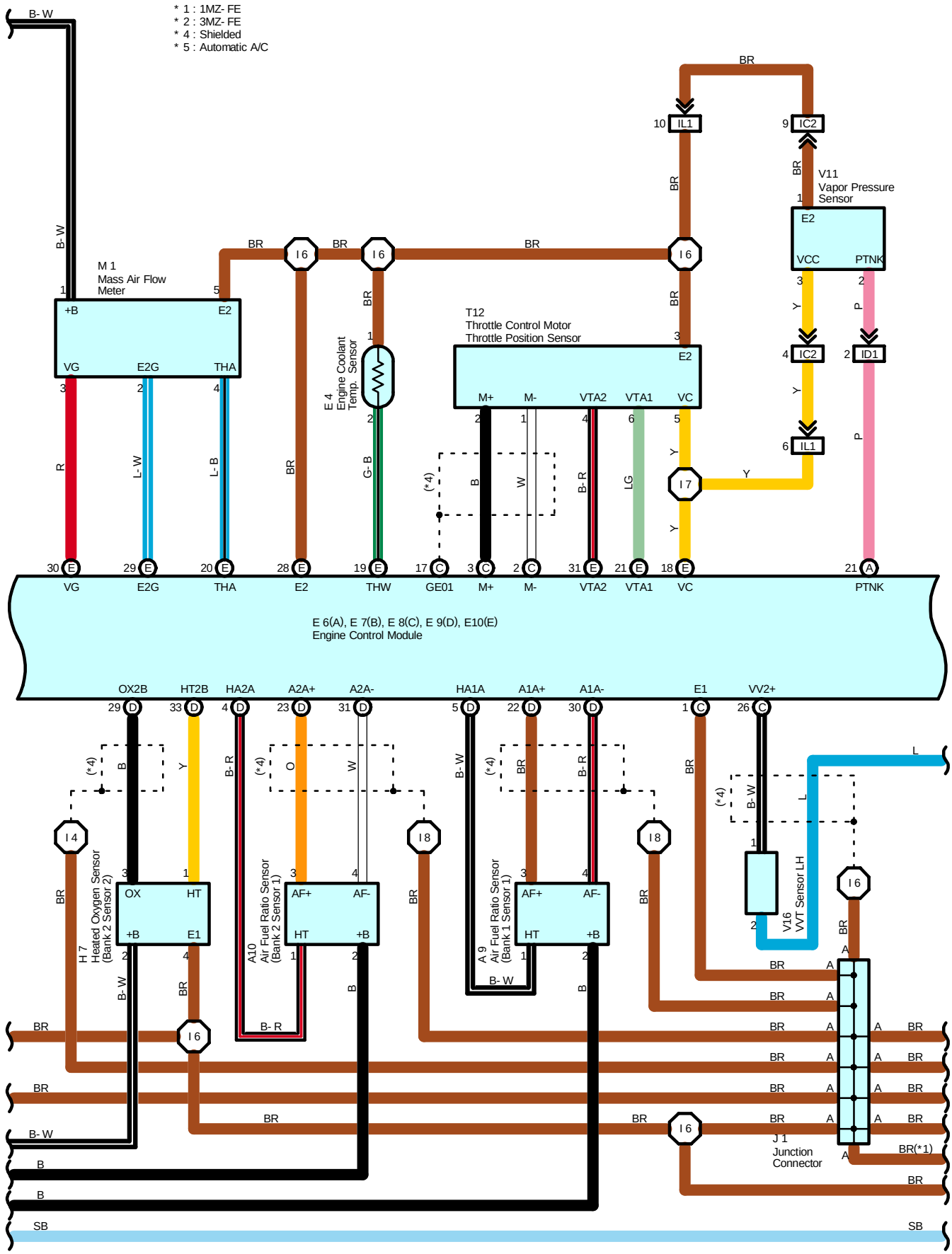
* 1 : 1MZ- FE
* 2 : 3MZ- FE
* 4 : Shielded
* 5 : Automatic A/C
M 1
Mass Air Flow Meter
+B
E2
VG
E2G
THA
E 4
Engine Coolant Temp. Sensor
THW
T12
Throttle Control Motor
Throttle Position Sensor
M+
M-
VTA2
VTA1
VC
V11
Vapor Pressure Sensor
VCC
PTNK
IL1
IC2
ID1
I 6
I 7
E 6(A), E 7(B), E 8(C), E 9(D), E10(E)
Engine Control Module
GE01
OX2B
HT2B
HA2A
A2A+
A2A-
HA1A
A1A+
A1A-
E1
VV2+
H 7
Heated Oxygen Sensor (Bank 2 Sensor 2)
OX
HT
+B
E1
A10
Air Fuel Ratio Sensor (Bank 2 Sensor 1)
AF+
AF-
A 9
Air Fuel Ratio Sensor (Bank 1 Sensor 1)
V16
VVT Sensor LH
I 4
I 8
J 1
Junction Connector
BR(*1)
B- W
B- R
L- W
L- B
G- B
LG
SB

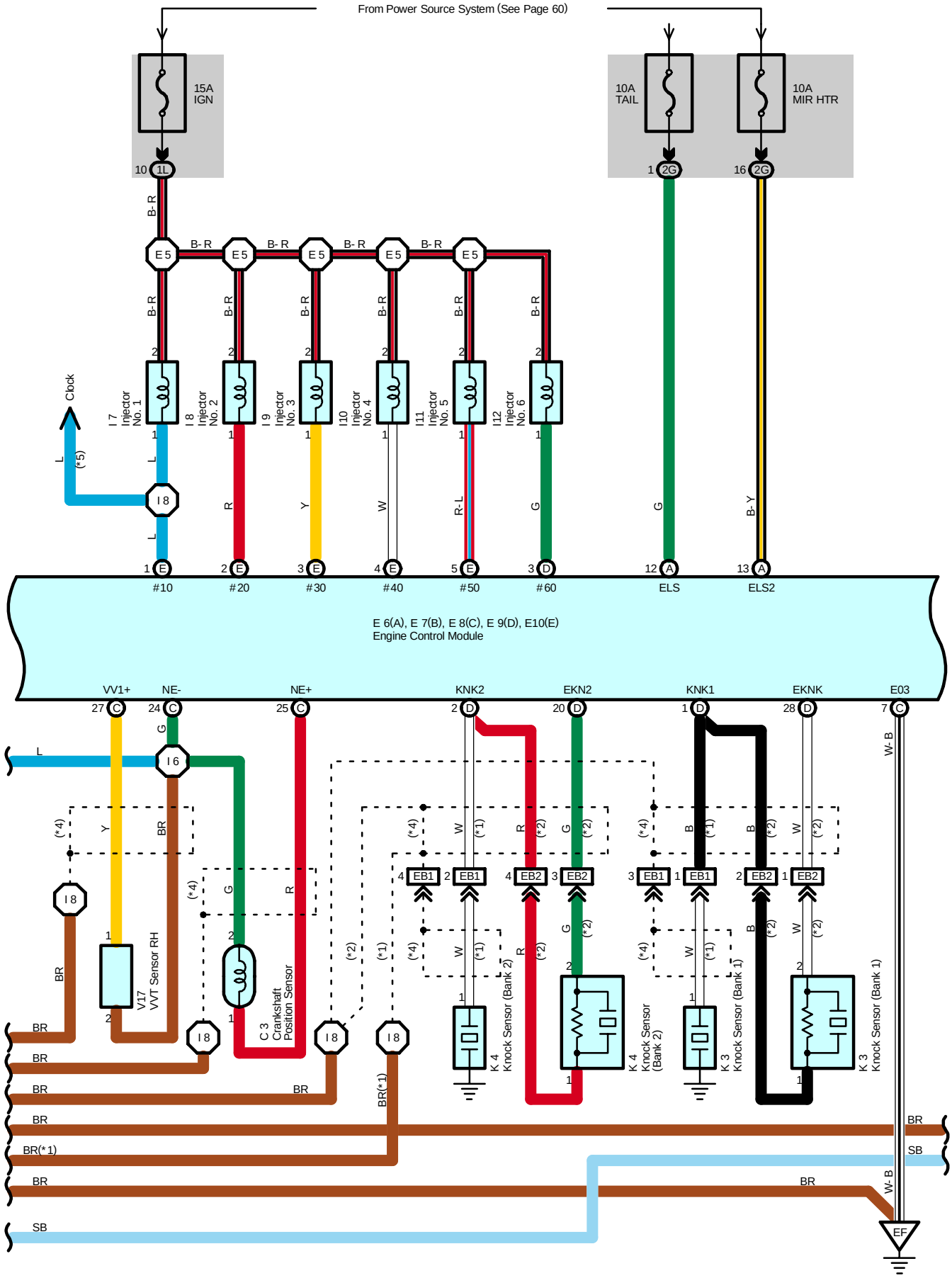
From Power Source System (See Page 60)
15A IGN
10A TAIL
10A MIR HTR
E 6(A), E 7(B), E 8(C), E 9(D), E10(E)
Engine Control Module
#10
#20
#30
#40
#50
#60
ELS
ELS2
Clock
VV1+
NE-
NE+
KNK2
EKN2
KNK1
EKNK
E03
V17 VVT Sensor RH
C 3 Crankshaft Position Sensor
K 4 Knock Sensor (Bank 2)
K 4 Knock Sensor (Bank 2)
K 3 Knock Sensor (Bank 1)
K 3 Knock Sensor (Bank 1)
EF

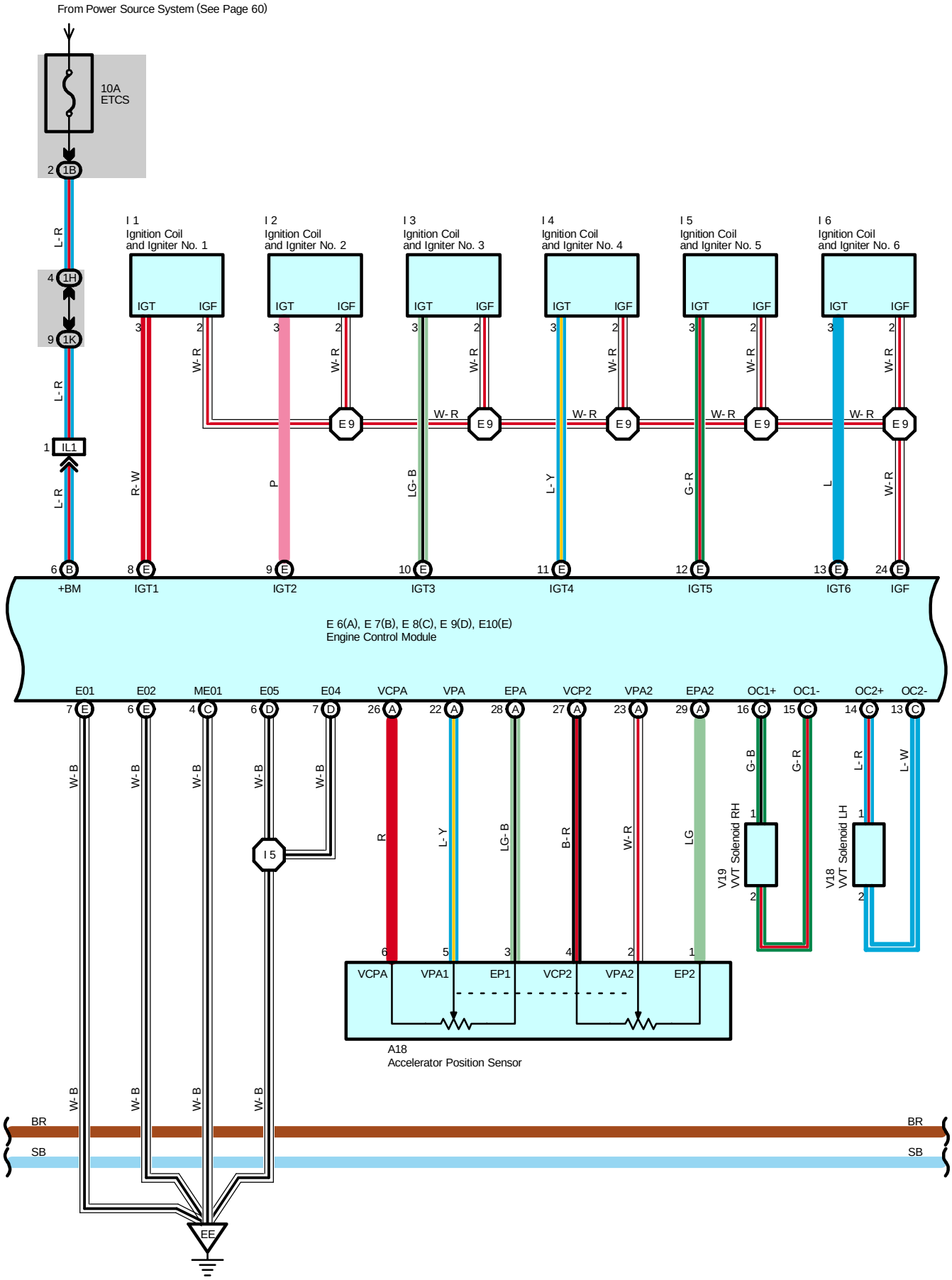
From Power Source System (See Page 60)
10A
ETCS
2 1B
L-R
4 1H
9 1K
L-R
1 IL1
L-R
I 1
Ignition Coil
and Igniter No. 1
I 2
Ignition Coil
and Igniter No. 2
I 3
Ignition Coil
and Igniter No. 3
I 4
Ignition Coil
and Igniter No. 4
I 5
Ignition Coil
and Igniter No. 5
I 6
Ignition Coil
and Igniter No. 6
IGT
IGF
W-R
E 9
R-W
P
LG-B
L-Y
G-R
L
W-R
6 B +BM
8 E IGT1
9 E IGT2
10 E IGT3
11 E IGT4
12 E IGT5
13 E IGT6
24 E IGF
E 6(A), E 7(B), E 8(C), E 9(D), E10(E)
Engine Control Module
E01
E02
ME01
E05
E04
VCPA
VPA
EPA
VCP2
VPA2
EPA2
OC1+
OC1-
OC2+
OC2-
W-B
I 5
R
L-Y
LG-B
B-R
W-R
LG
G-B
G-R
L-R
L-W
V19
VVT Solenoid RH
V18
VVT Solenoid LH
VCPA
VPA1
EP1
VCP2
VPA2
EP2
A18
Accelerator Position Sensor
BR
SB
EE

* 2 : TMC Made
* 3 : TMMK Made
* 5 : Automatic A/C
* 6 : Manual A/C
* 7 : Manual A/C TMMK Made USA
* 8 : Manual A/C TMMK Made Canada, Manual A/C TMC Made

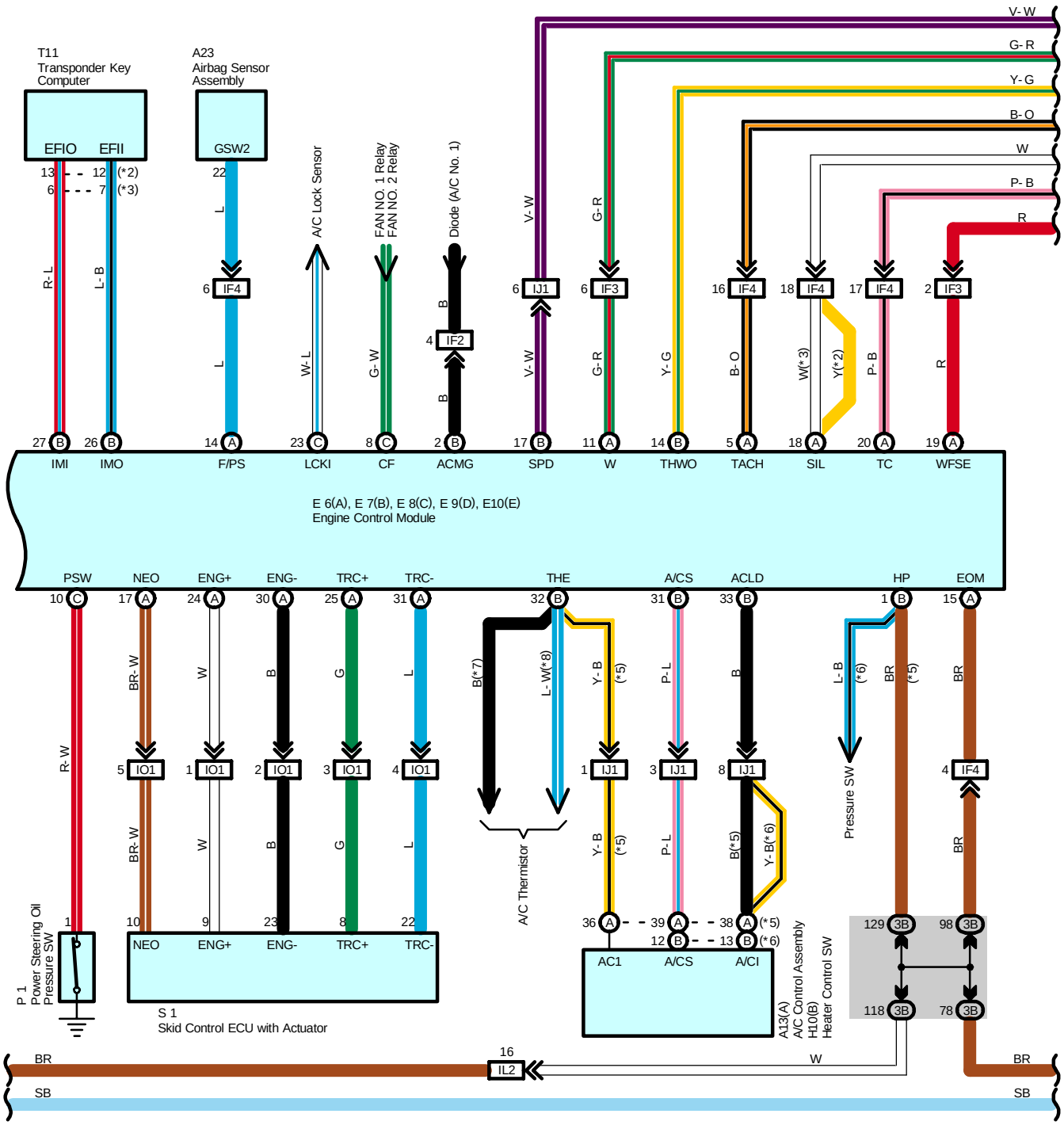

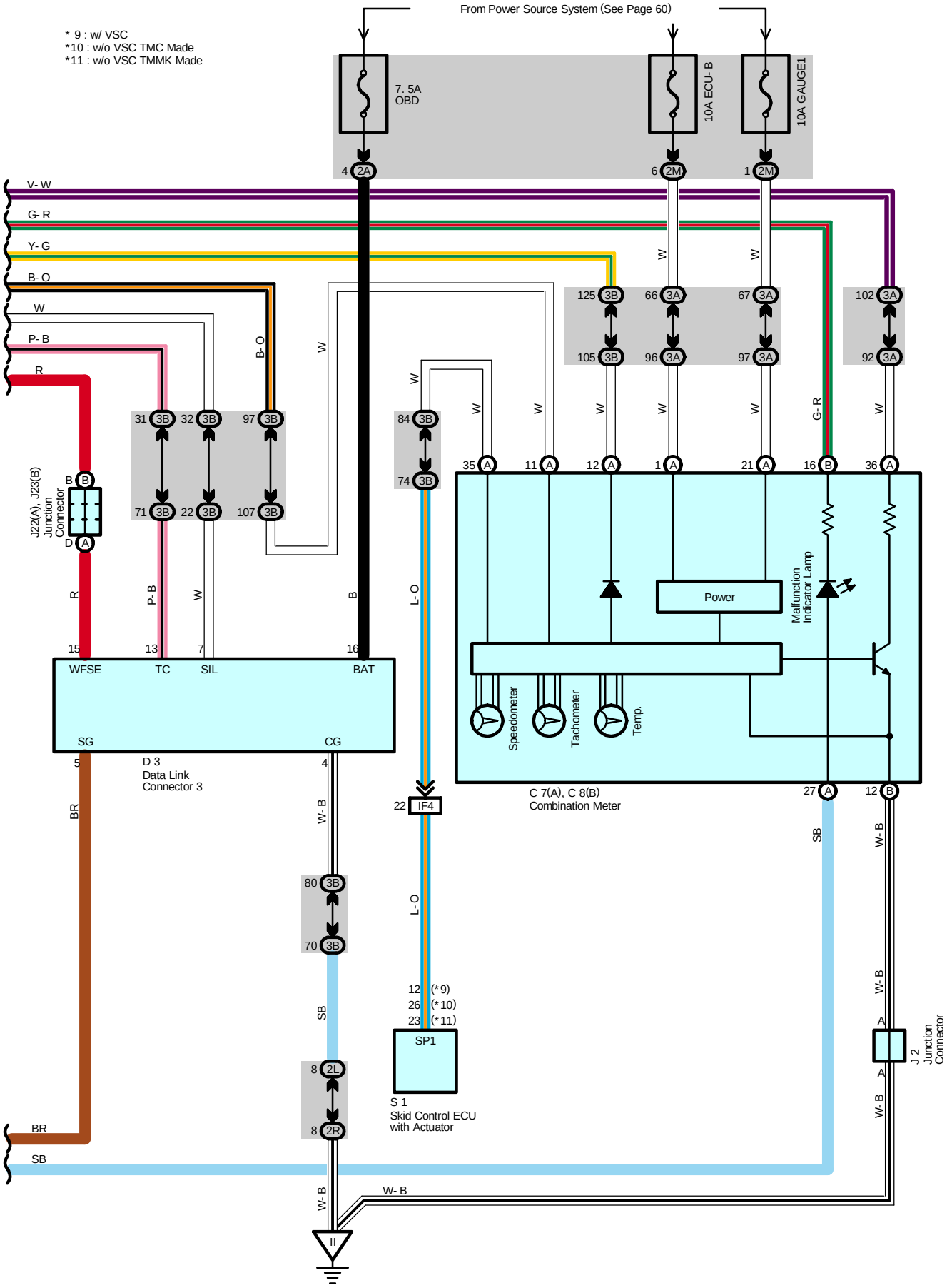
From Power Source System (See Page 60)
* 9 : w/ VSC
*10 : w/o VSC TMC Made
*11 : w/o VSC TMMK Made
7. 5A OBD
10A ECU- B
10A GAUGE1
V- W
G- R
Y- G
B- O
W
P- B
R
B- O
W
J22(A), J23(B) Junction Connector
R
P- B
W
B
L- O
WFSE
TC
SIL
BAT
SG
CG
D 3 Data Link Connector 3
BR
W- B
SB
IF4
L- O
SP1
S 1 Skid Control ECU with Actuator
BR
SB
W- B
W- B
Power
Malfunction Indicator Lamp
Speedometer
Tachometer
Temp.
C 7(A), C 8(B) Combination Meter
SB
W- B
W- B
J 2 Junction Connector
W- B

**System Outline**

This system utilizes an engine control module and maintains overall control of the engine, transmission and so on. An outline of the engine control is explained here.

**1. Input Signals**

(1) Engine coolant temp. signal circuit

The engine coolant temp. sensor detects the engine coolant temp. and has a built-in thermistor with a resistance which varies according to the water temp. is input into TERMINAL THW of the engine control module as a control signal.

(2) Intake air temp. signal circuit

The intake air temp. sensor is installed in the mass air flow meter and detects the intake air temp., which is input as a control signal into TERMINAL THA of the engine control module.

(3) Oxygen sensor signal circuit

The oxygen density in the exhaust gases is detected and input as a control signal into TERMINALS OX1B and OX2B of the engine control module. To maintain stable detection performance by the heated oxygen sensor, a heater is used for warming the sensor. The heater is also controlled by the engine control module (HT1B and HT2B).

(4) Throttle signal circuit

The throttle position sensor detects the throttle valve opening angle as a control signal, which is input into TERMINALS VTA1 and VTA2 of the engine control module.

(5) Vehicle speed signal circuit

The vehicle speed sensor, detects the vehicle speed and input to ABS speed sensor of the skid control ECU with actuator, from skid control ECU with actuator to TERMINAL SPD of the engine control module, Via combination meter.

(6) Park/Neutral position SW signal circuit

The Park/Neutral position SW detects whether the shift position is in neutral, parking or not, and inputs a control signal into TERMINAL NSW of the engine control module.

(7) A/C SW signal circuit

The A/C control assembly (Automatic A/C) or heater control SW (Manual A/C) inputs the A/C operations into TERMINAL A/CS of the engine control module as a control signal.

(8) Battery signal circuit

Voltage is always supplies to TERMINAL BATT of the engine control module.
If you turn on the ignition SW, the current goes from TERMINAL MREL of the engine control module to the EFI relay and put on the relay, and the voltage related to the engine control module operation is supplied to TERMINALS +B and +B2 of the engine control module through the EFI relay.

(9) Intake air volume signal circuit

Intake air volume is detected by the mass air flow meter and a signal is input into TERMINAL VG of the engine control module as a control signal.

(10) Starter signal circuit

To confirm whether the engine is cranking, the voltage applied to the starter motor during cranking is detected and the signal is input into TERMINAL STA of the engine control module as a control signal.

(11) Engine knock signal circuit

Engine knocking is detected by the knock sensor No.1 and No.2, then the signals are input into TERMINALS KNK1 and KNK2 of the engine control module as a control signal.

(12) Air fuel ratio signal circuit

The air fuel ratio is detected and input as a control signal into TERMINALS A1A+, A2A+ of the engine control module.

**2. Control System**

* SFI system
  The SFI system monitors the engine condition through the signals, which are input from each sensor to engine control module. The best fuel injection volume is decided based on this data and the program memorized by the engine control module, and the control signal is output to TERMINALS #10, #20, #30, #40, #50 and #60 of the engine control module to operate the injector (Inject the fuel). The SFI system produces control of fuel injection operation by the engine control module in response to the driving conditions.
* ESA system
  The ESA system monitors the engine condition through the signals, which are input to the engine control module from each sensor. The best ignition timing is decided according to this data and the memorized data in the engine control module, and the control signal is output to TERMINALS IGT1, IGT2, IGT3, IGT4, IGT5 and IGT6. This signal controls the igniter to provide the best ignition timing for the driving conditions.
* Heated oxygen sensor heater control system
  The heated oxygen sensor heater control system turns the heater on when the intake air volume is low (Temp. of exhaust emissions is low), and warms up the heated oxygen sensor to improve detection performance of the sensor.
  The engine control module evaluates the signals from each sensor, current is output to TERMINALS HT1B and HT2B, controlling the heater.
* Air fuel ratio sensor heater control system
  The air fuel ratio sensor heater control system turns the heater on when the intake air volume is low (Temp. of exhaust emission is low), and warms up the air fuel ratio sensor to improve detection performance of the sensor.
  The engine control module evaluates the signals from each sensor, current is output to TERMINALS HA1A and HA2A, controlling the heater.
* ACIS
  ACIS includes a valve in the bulkhead separating the surge tank into two parts. This valve is opened and closed in accordance with the driving conditions to control the intake manifold length in two stages for increased engine output in all ranges from low to high speeds.
  The engine control module judges the engine speed by the signals from each sensor and outputs current to the TERMINAL ACIS to control the VSV (ACIS No.1).

**3. Diagnosis System**

With the diagnosis system, when there is a malfunction in the engine control module signal system, the malfunctioning system is recorded in the memory.

**4. Fail-Safe System**

When a malfunction occurs in any systems, if there is a possibility of engine trouble being caused by continued control based on the signals from that system, the fail-safe system either controls the system by using data (Standard values) recorded in the engine control module memory or else stops the engine.

**Service Hints**

**E4 Engine Coolant Temp. Sensor**

1-2 : Approx. 15.04 kΩ (-20●C, -4●F)
Approx. 5.74 kΩ (0●C, 32●F)
Approx. 2.45 kΩ (20●C, 68●F)
Approx. 1.15 kΩ (40●C, 104●F)
Approx. 0.584 kΩ (60●C, 140●F)
Approx. 0.318 kΩ (80●C, 176●F)

**E6 (A), E7 (B), E8 (C), E9 (D), E10 (E) Engine Control Module**

Voltage at engine control module wiring connector

BATT-E1 : Always 9.0-14.0 volts
+B, +B2-E1 : 9.0-14.0 volts (Ignition SW at ON position)
VC-E2 : Always 4.5-5.5 volts (Ignition SW at ON position)
VTA1-E2 : 0.3-0.8 volts (Ignition SW on and throttle valve fully closed)
: 3.2-4.9 volts (Ignition SW on and throttle valve fully open)
VG-E2G : 1.1-1.5 volts (Engine idling and A/C SW OFF position)
THA-E2 : 0.5-3.4 volts (Engine idling and intake air temp. 20˚C, 68˚F)
THW-E2 : 0.2-1.0 volts (Engine idling and engine coolant temp. 80˚C, 176˚F)
IGF-E1 : 4.5-5.5 volts (Ignition SW at ON position)
Pulse generation (Engine idling)
NE+-NE- : Pulse generation (Engine idling)
NSW-E1 : 9.0-14.0 volts (Ignition SW on and other shift position in P or N position)
Below 3.0 volts (Ignition SW on and shift position in P or N position)
SPD-E1 : Pulse generation (Ignition SW on and rotate driving wheel slowly)
W-E1 : Below 3.0 volts
ACLD-E1 : Below 2.0 volts (Engine idling and A/C SW on)
9.0-14.0 volts (A/C SW off)
A/CS-E1 : 9.0-14.0 volts (Engine idling and A/C SW on)
Below 2.0 volts (A/C SW off)
ACIS-E01 : 9.0-14.0 volts (Ignition SW at ON position)
STA-E1 : 6.0 volts or more (Engine cranking)
ELS-E1 : 7.5-14.0 volts (Taillight SW at ON position)
0-1.5 volts (Taillight SW at OFF position)
ELS2-E1 : 7.5-14.0 volts (Defogger SW at ON position)
0-1.5 volts (Defogger SW at OFF position)
FC-E1 : 9.0-14.0 volts (Ignition SW at ON position)
0-3.0 volts (Engine idling)
PRG-E01 : 9.0-14.0 volts (Ignition SW at ON position)
CF-E1 : 9.0-14.0 volts (Electric cooling fan is operating on high speed)
0-2.0 volts (Electric cooling fan is operating on low speed or off)
TACH-E1 : Pulse generation (Engine idling)
PTNK-E1 : 3.0-3.6 volts (Ignition SW at ON position)
1.3-2.1 volts (Ignition SW on and apply vacuum 2.0 kpa (15.0 mmHg, 0.6 in.Hg)
STP-E1 : 7.5-14.0 volts (Ignition SW on and brake pedal depressed)
Below 1.5 volts (Ignition SW on and brake pedal released)
SIL-E1 : Pulse generation (During transmission)
KNK1, KNK2-E1 : Pulse generation (Engine idling)
HT1B, HT2B-E03 : 9.0-14.0 volts (Ignition SW at ON position)
0-3.0 volts (Engine idling)
OX1B, OX2B-E1 : Pulse generation (Maintain engine speed at 2500 rpm for two minutes after warning up)
IGT1, IGT2, IGT3, IGT4, IGT5, IGT6-E1 : Pulse generation (Engine idling)
#10, #20, #30, #40, #50, #60-E01 : 9.0-14.0 volts (Ignition SW at ON position)
Pulse generation (Engine idling)

**I7, I8, I9, I10, I11, I12 Injector**

2-1 : Approx. 13.8 Ω

**C/OPN Relay**

3-5 : Closed with the starter running

**EFI Relay**

3-5 : Closed with the ignition SW at ON or ST position

### ○ : Parts Location

| Code | See Page | Code | See Page | Code | See Page |
|---|---|---|---|---|---|
| A4 | 36 (*1) | H10 B | 41 | K3 | 37 (*1) |
| A9 | 36 (*1) | I1 | 37 (*1) | K4 | 37 (*1) |
| A10 | 36 (*1) | I2 | 37 (*1) | M1 | 37 (*1) |
| A13 A | 40 | I3 | 37 (*1) | P1 | 37 (*1) |
| A18 | 40 | I4 | 37 (*1) | S1 | 37 (*1) |
| A23 | 40 | I5 | 37 (*1) | S14 | 41 |
| C3 | 36 (*1) | I6 | 37 (*1) | T11 | 41 |
| C7 A | 40 | I7 | 37 (*1) | T12 | 37 (*1) |
| C8 B | 40 | I8 | 37 (*1) | V3 | 37 (*1) |
| D3 | 40 | I9 | 37 (*1) | V4 | 43 |
| E4 | 36 (*1) | I10 | 37 (*1) | V6 | 37 (*1) |
| E6 A | 40 | I11 | 37 (*1) | V11 | 43 |
| E7 B | 40 | I12 | 37 (*1) | V13 | 37 (*1) |
| E8 C | 40 | I15 | 41 | V14 | 37 (*1) |
| E9 D | 40 | J1 | 41 | V15 | 37 (*1) |
| E10 E | 40 | J2 | 41 | V16 | 37 (*1) |
| F8 | 42 | J11 | 42 | V17 | 37 (*1) |
| H6 | 36 (*1) | J22 A | 41 | V18 | 37 (*1) |
| H7 | 36 (*1) | J23 B | 41 | V19 | 37 (*1) |

### ▭ : Relay Blocks

| Code | See Page | Relay Blocks (Relay Block Location) |
|---|---|---|
| 1 | 22 | Engine Room R/B (Engine Compartment Left) |

### ▭ : Junction Block and Wire Harness Connector

| Code | See Page | Junction Block and Wire Harness (Connector Location) |
|---|---|---|
| 1A | 25 | Engine Room Main Wire and Engine Room J/B (Engine Compartment Left) |
| 1B | | |
| 1C | | |
| 1D | | |
| 1E | | |
| 1H | | |
| 1J | | |
| 1K | 25 | Engine Wire and Engine Room J/B (Engine Compartment Left) |
| 1L | | |
| 2A | 28 | Instrument Panel Wire and Driver Side J/B (Lower Finish Panel) |
| 2E | 28 | Engine Room Main Wire and Driver Side J/B (Lower Finish Panel) |
| 2G | | |
| 2K | 28 | Floor Wire and Driver Side J/B (Lower Finish Panel) |
| 2L | 29 | Instrument Panel Wire and Driver Side J/B (Lower Finish Panel) |
| 2M | | |
| 2O | | |
| 2P | | |
| 2R | | |
| 3A | 34 | Instrument Panel Wire and Passenger Side J/B (Instrument Panel Brace RH) |
| 3B | | |

* 1 : 1MZ-FE, 3MZ-FE * 2 : 2AZ-FE * 3 : w/ Power Seat * 4 : w/o Power Seat

### : Connector Joining Wire Harness and Wire Harness

| Code | See Page | Joining Wire Harness and Wire Harness (Connector Location) |
|---|---|---|
| EB1 | 46 (1MZ-FE) | Engine Wire and Sensor Wire (Left Bank of Cylinder Head) |
| EB2 | 46 (3MZ-FE) | |
| IC2 | 50 | Instrument Panel Wire and Floor Wire (Left Kick Panel) |
| ID1 | 50 | Engine Room Main Wire and Floor Wire (Left Side of Driver Side J/B) |
| IF1 | 50 | Engine Room Main Wire and Instrument Panel Wire (Right Side of Steering Column Tube) |
| IF2 | | |
| IF3 | | |
| IF4 | | |
| IF6 | | |
| IJ1 | 52 | Instrument Panel Wire and Instrument Panel Wire (Instrument Panel Reinforcement RH) |
| IL1 | 52 | Engine Wire and Instrument Panel Wire (Behind the Glove Box) |
| IL2 | | |
| IO1 | 52 | Engine Room Main Wire and Engine Room Main Wire (Right Side of the Instrument Panel ) |

### : Ground Points

| Code | See Page | Ground Points Location |
|---|---|---|
| EC | 46 (*1) | Left Fender |
| ED | | |
| EE | 46 (*1) | Left Side of Cylinder Head |
| EF | 46 (*1) | Right Side of Cylinder Head |
| II | 50 | Cowl Side Panel LH |
| BQ | 54 | Front Side of Rear Quarter Wheel House LH |

### : Splice Points

| Code | See Page | Wire Harness with Splice Points | Code | See Page | Wire Harness with Splice Points |
|---|---|---|---|---|---|
| E5 | 46 (*1) | Engine Wire | I6 | 52 | Engine Wire |
| E8 | | | I7 | | |
| E9 | | | I8 | | |
| I4 | 52 | | I10 | 52 | Engine Room Main Wire |
| I5 | | | | | |

* 1 : 1MZ-FE, 3MZ-FE  * 2 : 2AZ-FE  * 3 : w/ Power Seat  * 4 : w/o Power Seat

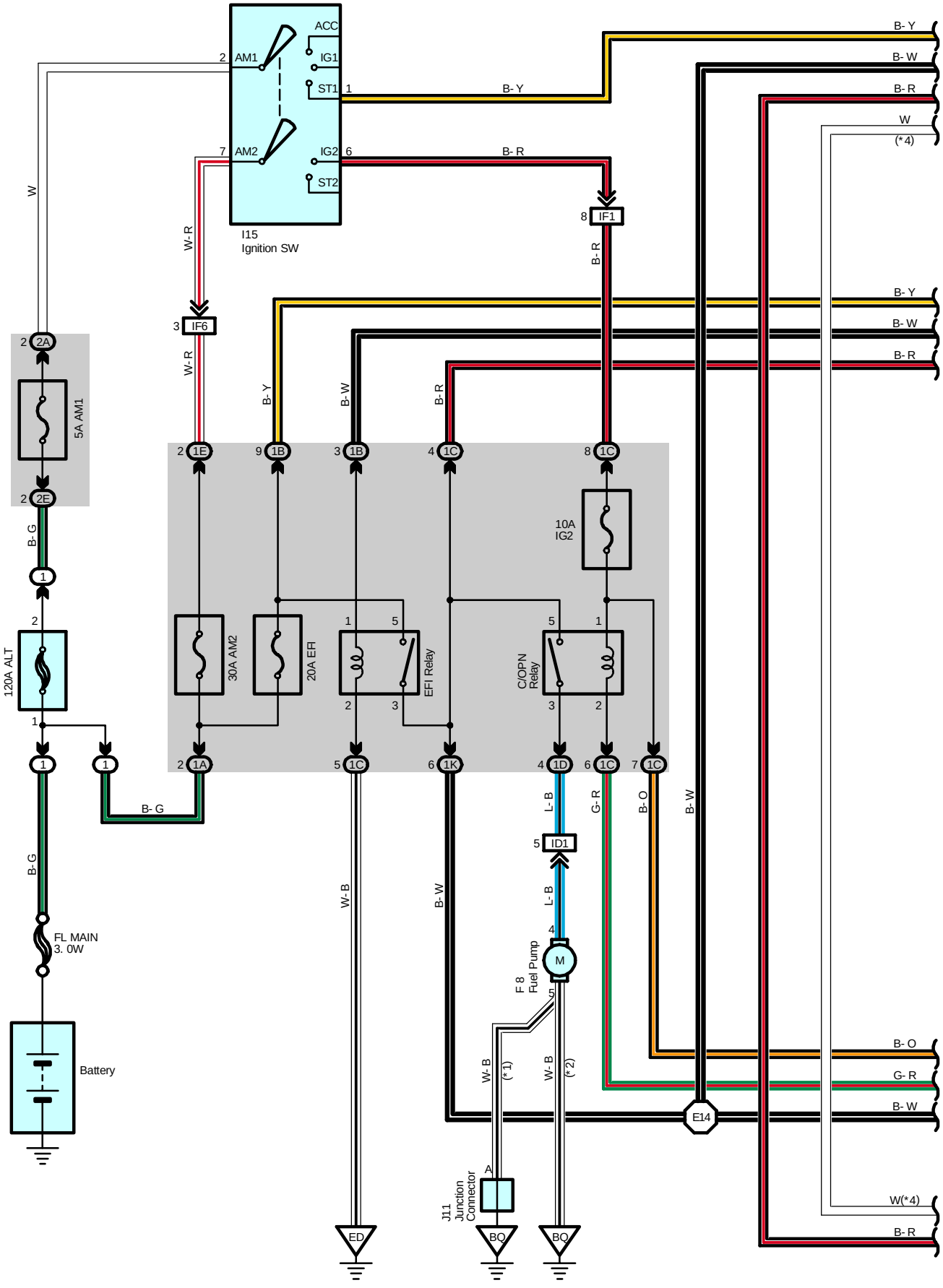
ACC
AM1
IG1
ST1
AM2
IG2
ST2
I15
Ignition SW
IF1
IF6
B- Y
B- W
B- R
W
(*4)
W- R
W
2A
5A AM1
2E
B- G
1
120A ALT
30A AM2
20A EFI
EFI Relay
C/OPN Relay
10A IG2
1E
1B
1C
1A
1K
1D
L- B
G- R
B- O
ID1
FL MAIN
3. 0W
Battery
W- B
F 8 Fuel Pump
M
(*1)
(*2)
J11 Junction Connector
A
E14
ED
BQ
W(*4)

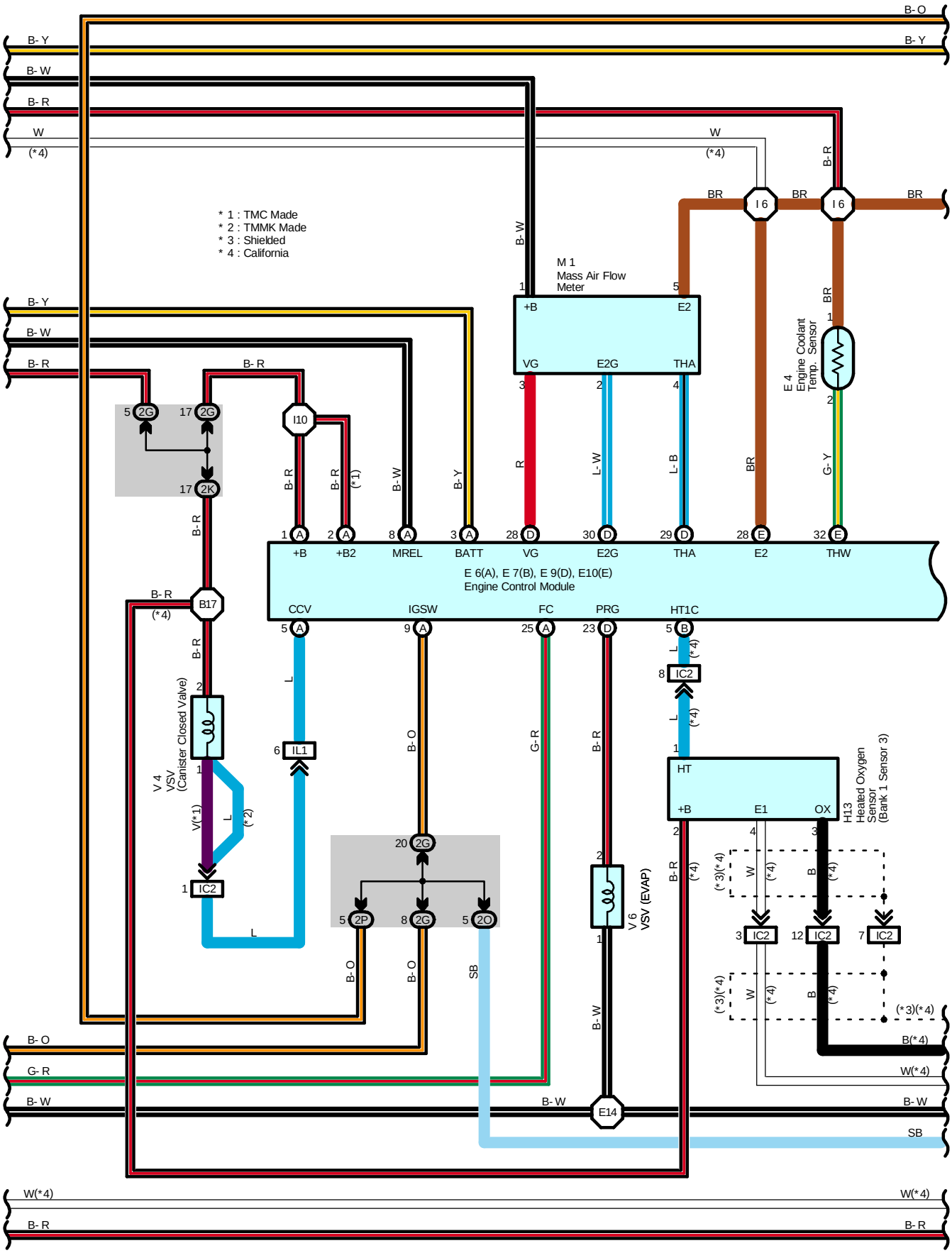
* 1 : TMC Made
* 2 : TMMK Made
* 3 : Shielded
* 4 : California
M 1
Mass Air Flow Meter
+B
E2
VG
E2G
THA
E 4
Engine Coolant Temp. Sensor
THW
E 6(A), E 7(B), E 9(D), E10(E)
Engine Control Module
+B
+B2
MREL
BATT
VG
E2G
THA
E2
THW
CCV
IGSW
FC
PRG
HT1C
V 4
VSV (Canister Closed Valve)
V 6
VSV (EVAP)
H13
Heated Oxygen Sensor (Bank 1 Sensor 3)
HT
+B
E1
OX
I 6
I10
B17
IC2
IL1
2G
2K
2P
2O
E14
B- Y
B- W
B- R
W
(*4)
B- O
G- R
BR
L
L- W
L- B
G- Y
R
SB
V(*1)
(*1)
(*2)
(*3)(*4)
B(*4)
W(*4)

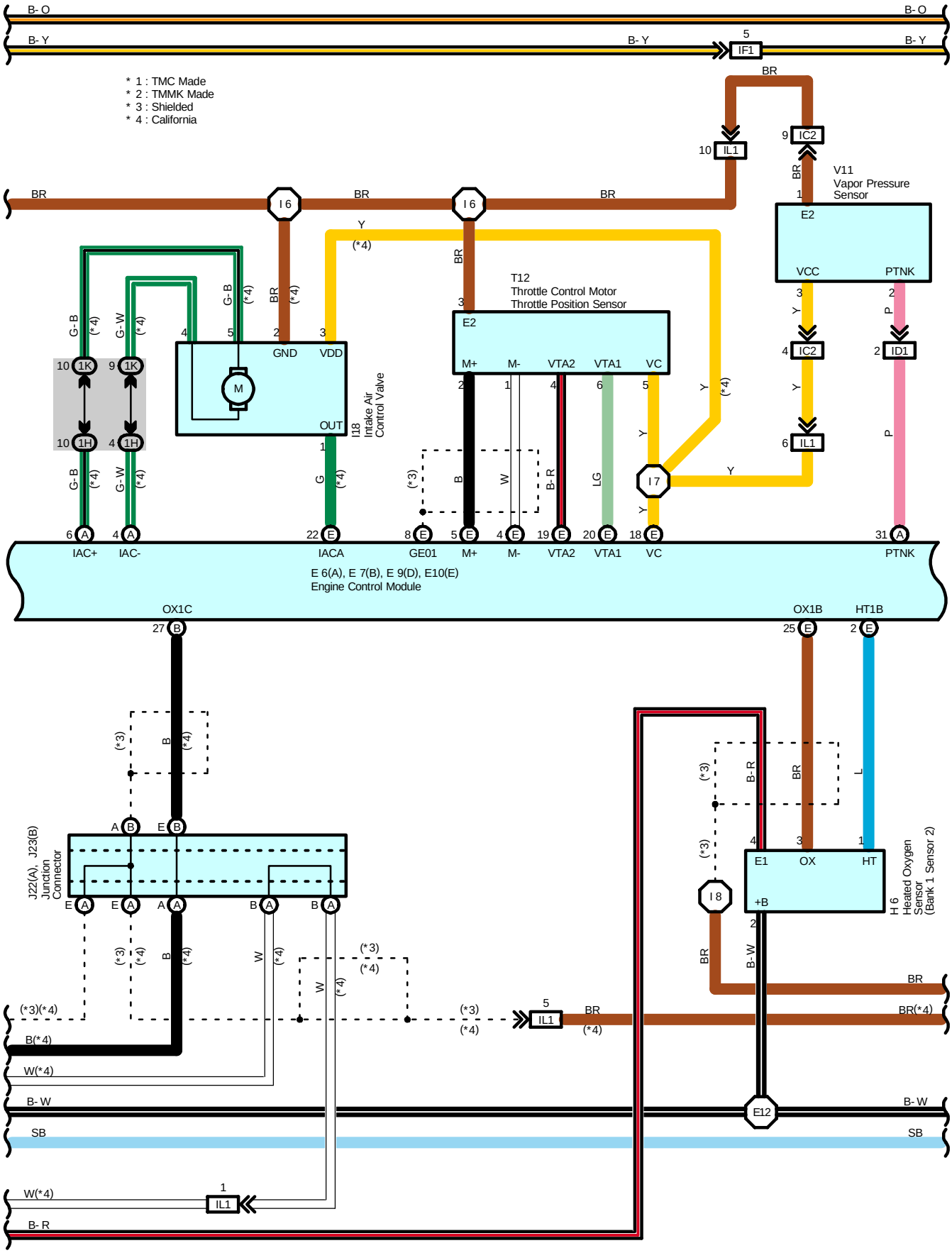
B- O
B- Y
B- Y
5
IF1
B- O
B- Y
* 1 : TMC Made
* 2 : TMMK Made
* 3 : Shielded
* 4 : California
BR
10 IL1
9 IC2
BR
V11
Vapor Pressure Sensor
1
E2
VCC
PTNK
3
2
Y
P
4 IC2
2 ID1
Y
6 IL1
P
BR
I 6
BR
I 6
BR
Y
(*4)
BR
T12
Throttle Control Motor
Throttle Position Sensor
E2
M+
M-
VTA2
VTA1
VC
G- B
(*4)
G- W
(*4)
G- B
(*4)
BR
(*4)
10 1K
9 1K
10 1H
4 1H
GND
VDD
OUT
M
I18
Intake Air Control Valve
G
(*4)
(*3)
B
W
B- R
LG
Y
I 7
Y
(*4)
6 A
4 A
22 E
8 E
5 E
4 E
19 E
20 E
18 E
31 A
IAC+
IAC-
IACA
GE01
M+
M-
VTA2
VTA1
VC
PTNK
E 6(A), E 7(B), E 9(D), E10(E)
Engine Control Module
OX1C
OX1B
HT1B
27 B
25 E
2 E
(*3)
B
(*4)
A B
E B
J22(A), J23(B)
Junction Connector
E A
E A
A A
B A
B A
(*3)
(*4)
B
(*4)
W
(*4)
W
(*4)
(*3)
(*4)
(*3)(*4)
B(*4)
W(*4)
B- W
SB
W(*4)
B- R
1
IL1
(*3)
(*4)
5
IL1
BR
(*4)
(*3)
B- R
BR
L
(*3)
(*3)
4
3
1
E1
OX
HT
+B
I 8
H 6
Heated Oxygen Sensor (Bank 1 Sensor 2)
2
BR
B- W
BR
BR(*4)
E12
B- W
SB

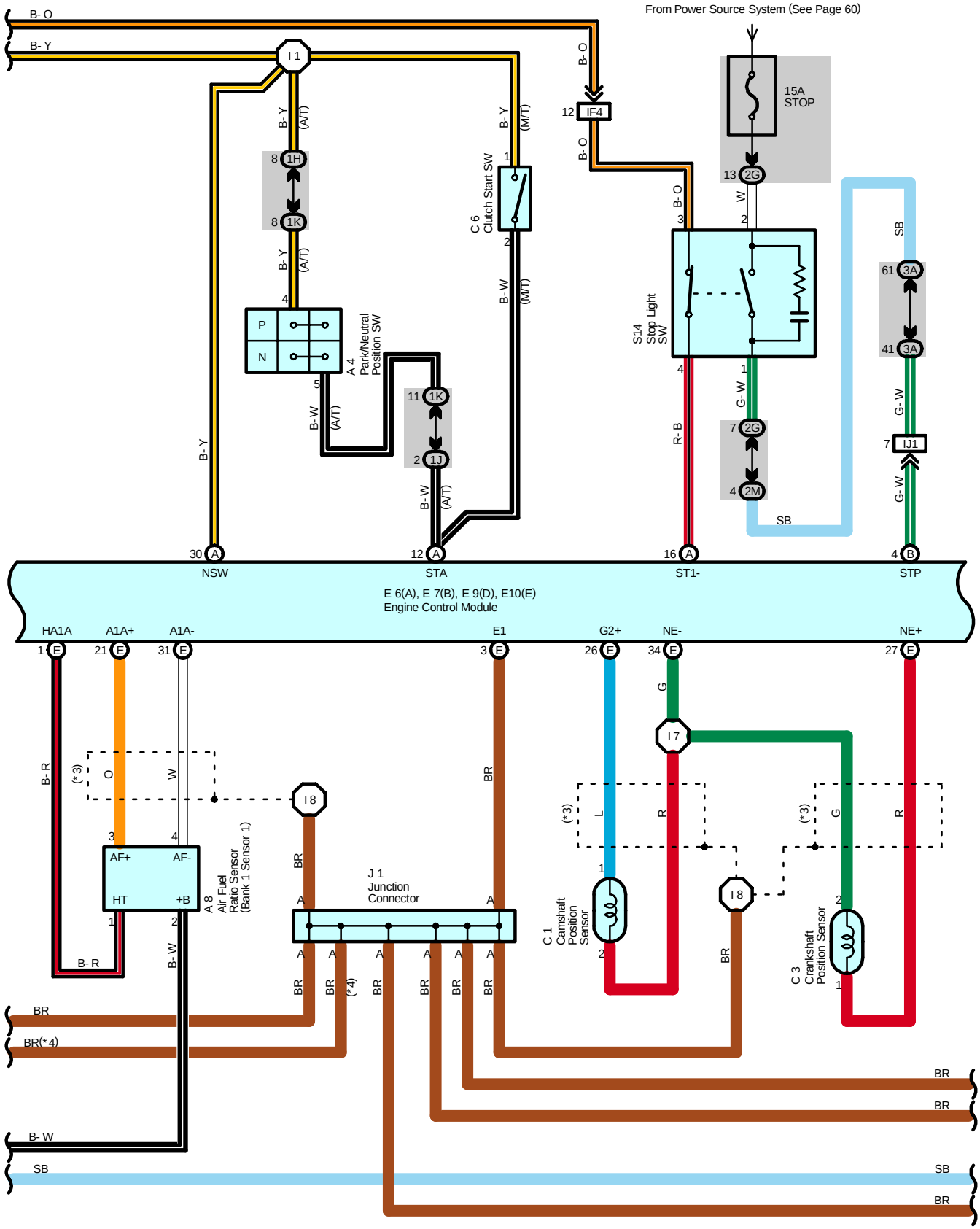
From Power Source System (See Page 60)
B- O
B- Y
I 1
B- Y (A/T)
B- Y (M/T)
B- O
12 IF4
15A STOP
13 2G
W
2
B- O
3
S14 Stop Light SW
SB
61 3A
41 3A
C 6 Clutch Start SW
8 1H
8 1K
B- Y (A/T)
4
P
N
A 4 Park/Neutral Position SW
5
B- W (A/T)
11 1K
2 1J
B- W (A/T)
B- W (M/T)
1
2
B- Y
4
R- B
1
G- W
7 2G
4 2M
SB
G- W
7 IJ1
G- W
30 A
NSW
12 A
STA
16 A
ST1-
4 B
STP
E 6(A), E 7(B), E 9(D), E10(E)
Engine Control Module
HA1A
A1A+
A1A-
E1
G2+
NE-
NE+
1 E
21 E
31 E
3 E
26 E
34 E
27 E
G
I 7
B- R
(*3)
O
W
I 8
BR
3
4
AF+
AF-
HT
+B
1
2
A 8 Air Fuel Ratio Sensor (Bank 1 Sensor 1)
B- R
B- W
J 1 Junction Connector
A
BR
(*4)
(*3)
L
R
G
1
2
C 1 Camshaft Position Sensor
C 3 Crankshaft Position Sensor
BR
BR(*4)
B- W
SB
BR
BR
SB
BR

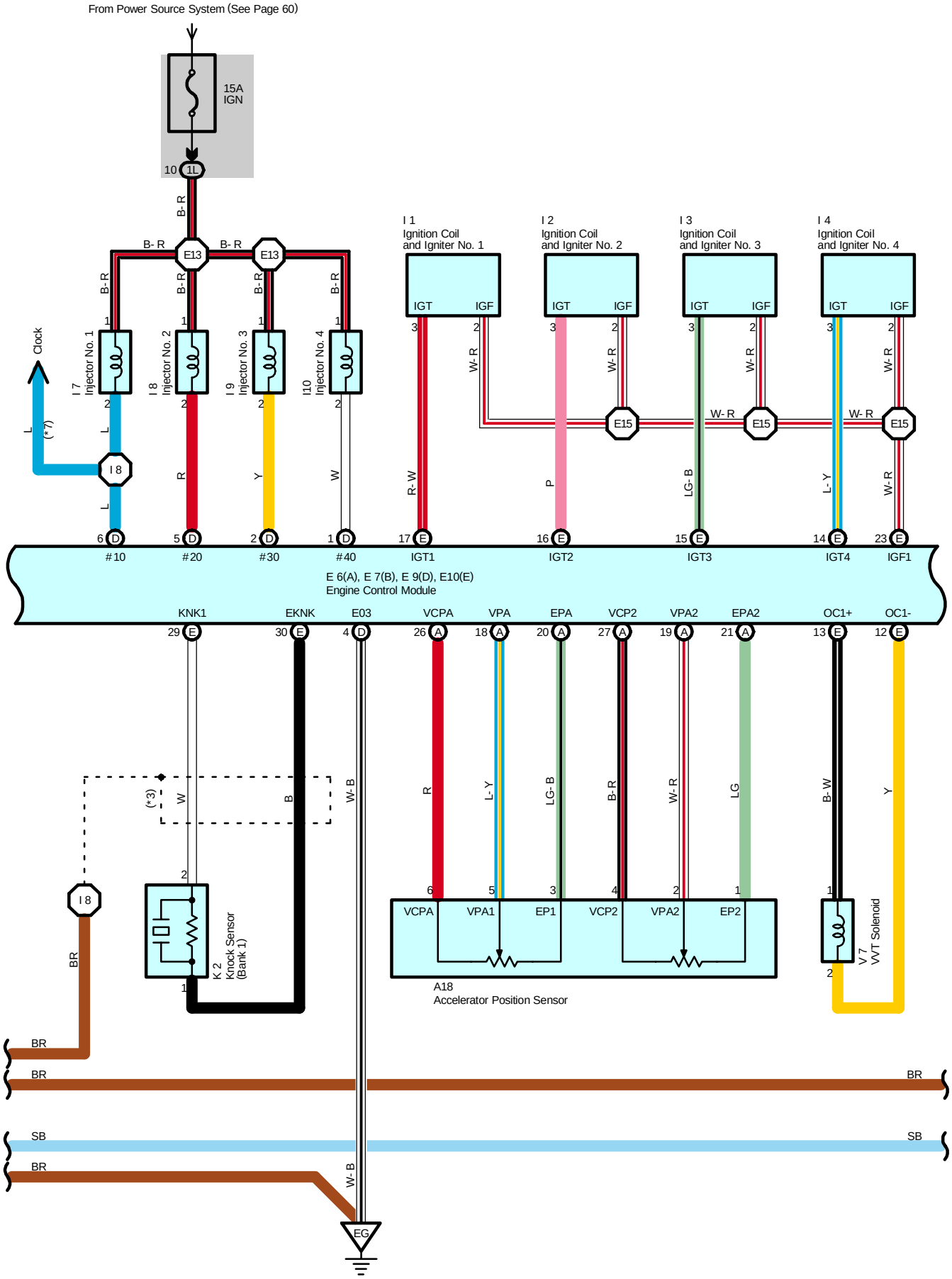
From Power Source System (See Page 60)
15A
IGN
10 1L
B-R
B-R
E13
E13
B-R
B-R
B-R
B-R
I 1
Ignition Coil
and Igniter No. 1
I 2
Ignition Coil
and Igniter No. 2
I 3
Ignition Coil
and Igniter No. 3
I 4
Ignition Coil
and Igniter No. 4
IGT
IGF
W-R
E15
W-R
Clock
I 7
Injector No. 1
I 8
Injector No. 2
I 9
Injector No. 3
I10
Injector No. 4
L
(*7)
I 8
R
Y
W
R-W
P
LG-B
L-Y
W-R
#10
#20
#30
#40
IGT1
IGT2
IGT3
IGT4
IGF1
E 6(A), E 7(B), E 9(D), E10(E)
Engine Control Module
KNK1
EKNK
E03
VCPA
VPA
EPA
VCP2
VPA2
EPA2
OC1+
OC1-
(*3)
W
B
W-B
R
L-Y
LG-B
B-R
W-R
LG
B-W
Y
I 8
BR
K 2
Knock Sensor
(Bank 1)
VCPA
VPA1
EP1
VCP2
VPA2
EP2
A18
Accelerator Position Sensor
V 7
VVT Solenoid
BR
BR
BR
SB
SB
BR
W-B
EG

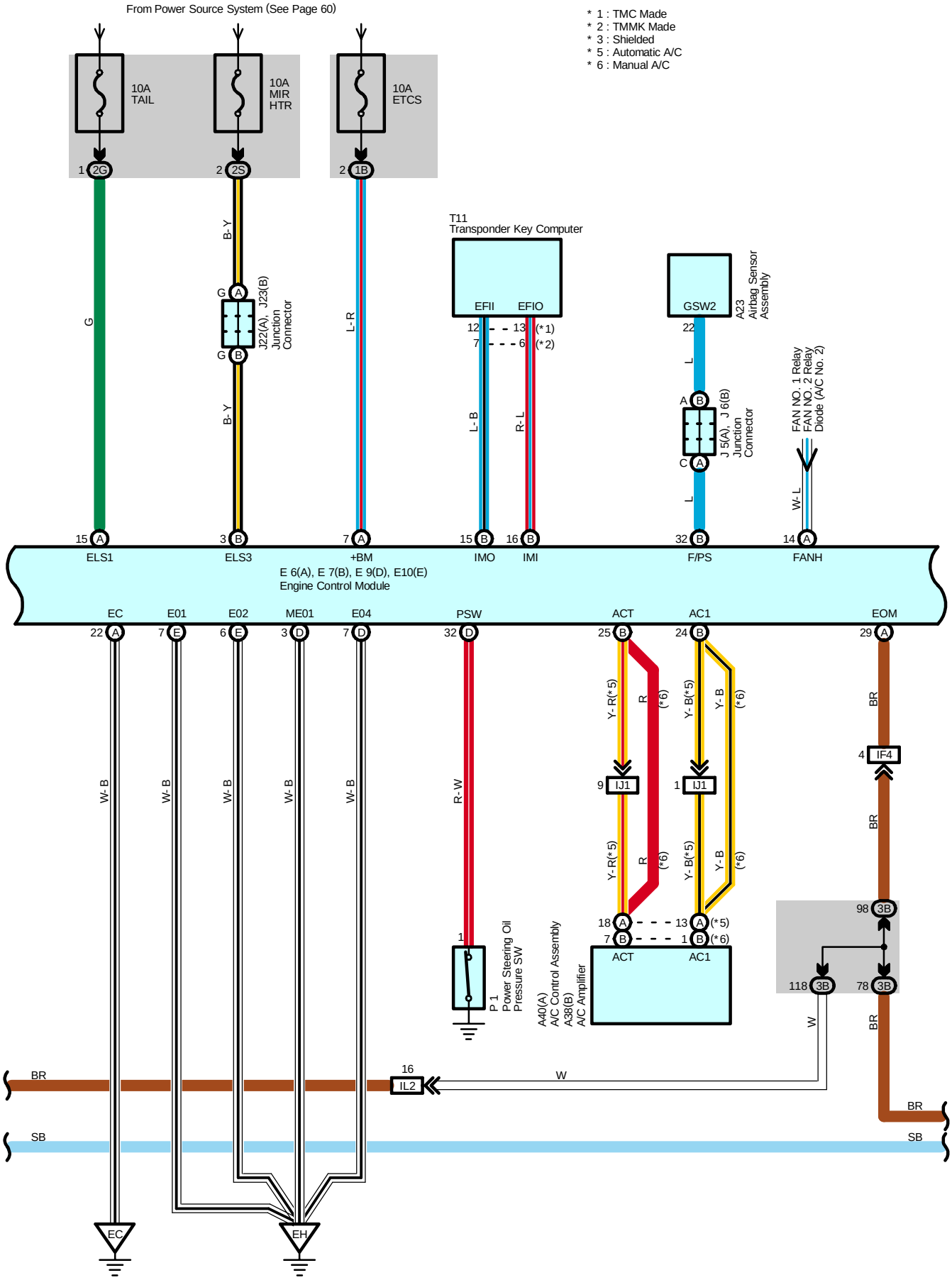
From Power Source System (See Page 60)
* 1 : TMC Made
* 2 : TMMK Made
* 3 : Shielded
* 5 : Automatic A/C
* 6 : Manual A/C
10A TAIL
10A MIR HTR
10A ETCS
1 2G
2 2S
2 1B
G
B- Y
L- R
J22(A), J23(B) Junction Connector
T11 Transponder Key Computer
EFII
EFIO
12
13
(*1)
7
6
(*2)
L- B
R- L
GSW2
A23 Airbag Sensor Assembly
22
L
J 5(A), J 6(B) Junction Connector
FAN NO. 1 Relay
FAN NO. 2 Relay
Diode (A/C No. 2)
W- L
15 ELS1
3 ELS3
7 +BM
15 IMO
16 IMI
32 F/PS
14 FANH
E 6(A), E 7(B), E 9(D), E10(E)
Engine Control Module
EC
E01
E02
ME01
E04
PSW
ACT
AC1
EOM
22
7
6
3
7
32
25
24
29
W- B
R- W
Y- R(*5)
R
(*6)
Y- B(*5)
Y- B
9 IJ1
1 IJ1
4 IF4
BR
98 3B
118 3B
78 3B
W
1
P 1
Power Steering Oil Pressure SW
18
13
(*5)
7
1
(*6)
A40(A) A/C Control Assembly
A38(B) A/C Amplifier
16 IL2
BR
SB
EC
EH

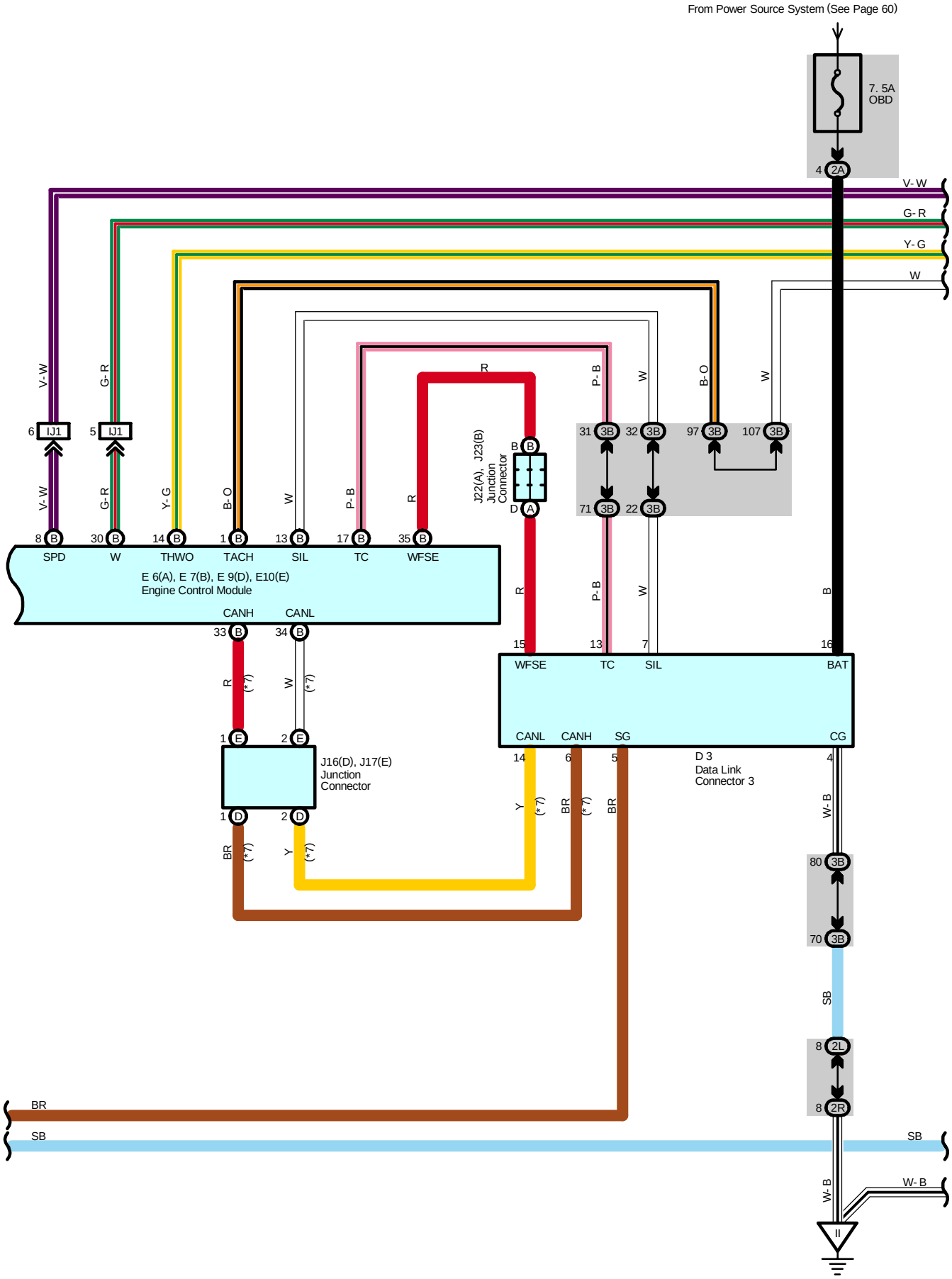
From Power Source System (See Page 60)
7. 5A
OBD
4 2A
V- W
G- R
Y- G
W
6 IJ1
5 IJ1
31 3B
32 3B
97 3B
107 3B
71 3B
22 3B
J22(A), J23(B)
Junction
Connector
B
D A
8 B
30 B
14 B
1 B
13 B
17 B
35 B
SPD
W
THWO
TACH
SIL
TC
WFSE
E 6(A), E 7(B), E 9(D), E10(E)
Engine Control Module
CANH
CANL
33 B
34 B
1 E
2 E
J16(D), J17(E)
Junction
Connector
1 D
2 D
15
13
7
16
WFSE
TC
SIL
BAT
CANL
CANH
SG
CG
14
6
5
4
D 3
Data Link
Connector 3
80 3B
70 3B
8 2L
8 2R
SB
BR
W- B
II

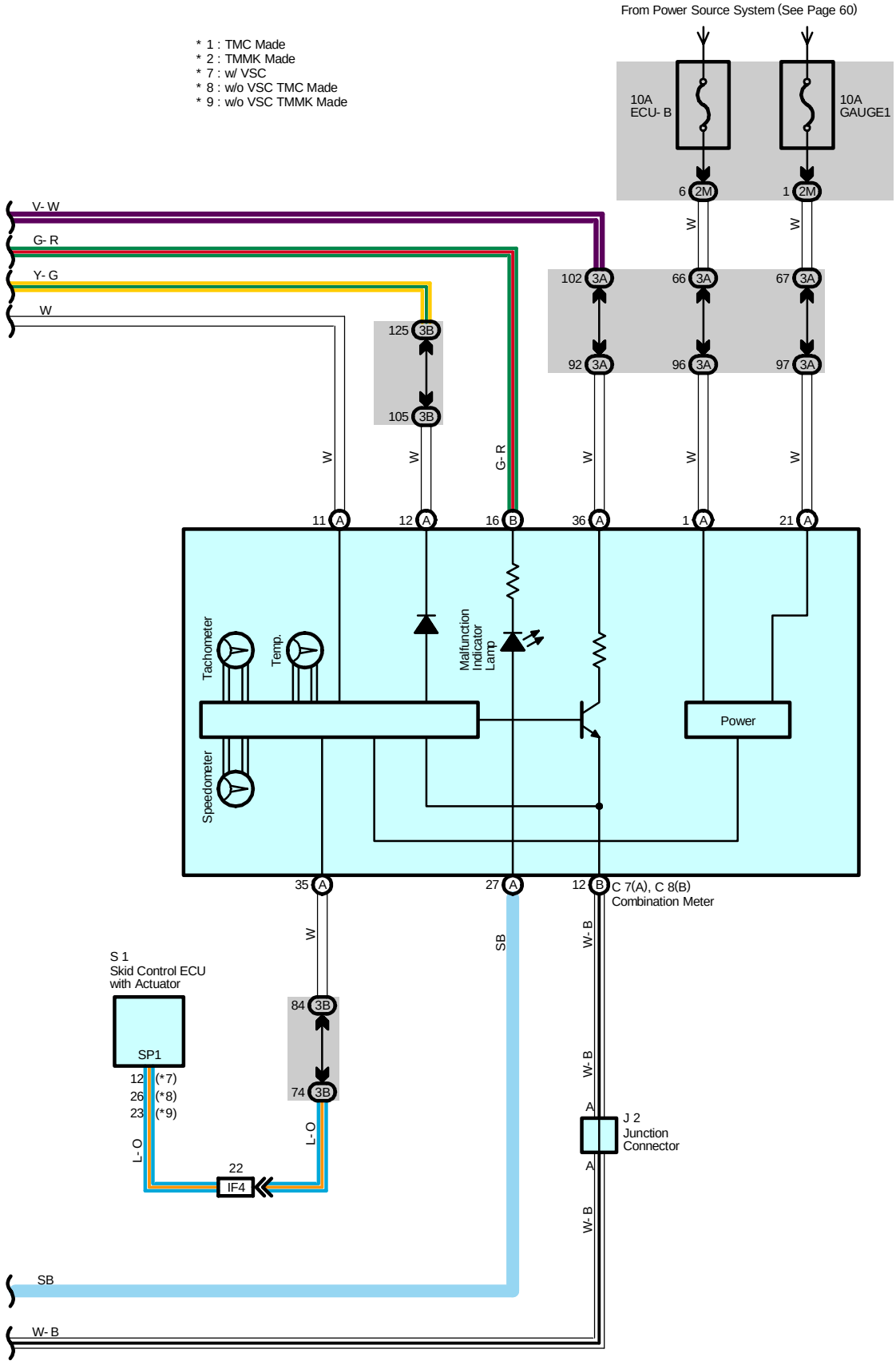
From Power Source System (See Page 60)
* 1 : TMC Made
* 2 : TMMK Made
* 7 : w/ VSC
* 8 : w/o VSC TMC Made
* 9 : w/o VSC TMMK Made
10A
ECU- B
10A
GAUGE1
6 2M
1 2M
V- W
G- R
Y- G
W
102 3A
66 3A
67 3A
92 3A
96 3A
97 3A
125 3B
105 3B
11 A
12 A
16 B
36 A
1 A
21 A
Tachometer
Temp.
Malfunction
Indicator
Lamp
Speedometer
Power
35 A
27 A
12 B
C 7(A), C 8(B)
Combination Meter
S 1
Skid Control ECU
with Actuator
SP1
12 (*7)
26 (*8)
23 (*9)
84 3B
74 3B
22
IF4
J 2
Junction
Connector
SB
W- B
L- O

**System Outline**

The engine control system utilizes a microcomputer and maintains overall control of the engine, transaxle etc. An outline of the engine control is given here.

**1. Input Signals**

(1) Engine coolant temp. signal circuit

The engine coolant temp. sensor detects the engine coolant temp. and has a built-in thermistor with a resistance, which varies according to the engine coolant temp.. The engine coolant temp. which is input into TERMINAL THW of the engine control module as a control signal.

(2) Intake air temp. signal circuit

The intake air temp. sensor is installed in the mass air flow meter and detects the intake air temp. which is input as a control signal to TERMINAL THA of the engine control module.

(3) Oxygen density signal circuit

The oxygen density in the exhaust emission is detected by the heated oxygen sensor and input as a control signal to TERMINALS OX1B and OX1C of the engine control module (HT1B and HT1C)

(4) RPM signal circuit

Camshaft position and crankshaft position are detected by the camshaft position sensor and crankshaft position sensor. Camshaft position is input as a control signal to TERMINAL G2+ of the engine control module, and engine RPM is input into TERMINAL NE+.

(5) Throttle position signal circuit

The throttle position sensor detects the throttle valve opening angle as a control signal, which is input into TERMINALS VTA1 and VTA2 of the engine control module.

(6) Vehicle speed circuit

The vehicle speed sensor, detects the vehicle speed and input to ABS speed sensor of the skid control ECU with actuator, from skid control ECU with actuator to TERMINAL SPD of the engine control module, Via combination meter.

(7) Battery signal circuit

Voltage is constantly applied to TERMINAL BATT of the engine control module. With the ignition SW turned on, the voltage for engine control module start-up power supply is applied to TERMINALS +B and +B2 of the engine control module via the EFI relay.

(8) A/C SW signal circuit

The A/C control assembly (Automatic A/C) or A/C amplifier (Manual A/C) inputs the A/C operations into TERMINAL AC1 of the engine control module.

(9) Stop light SW signal circuit

The stop light SW is used to detect whether the vehicle is braking or not and the signal is input into TERMINAL STP of the engine control module as a control signal.

(10) Starter signal circuit

To confirm whether the engine is cranking, the voltage is applied to the starter motor during cranking is detected and the signal is input into TERMINAL STA of the engine control module as a control signal.

(11) Engine knock signal circuit

Engine knocking is detected by knock sensor and the signal is input into TERMINAL KNK1 as a control signal.

(12) Air fuel ratio signal system

The air fuel ratio is detected and input as a control signal into TERMINAL AF1A+ of the engine control module.

**2. Control System**

* SFI system
  The SFI system monitors the engine condition through the signals input from each sensor to the engine control module. And the control signal is output to TERMINALS #10, #20, #30, #40 of the engine control module to operate the injector (Inject the fuel). The SFI system controls the fuel injection operation by the engine control module in response to the driving conditions.
* ESA system
  The ESA system monitors the engine condition through the signals input to the engine control module from each sensor. The best ignition timing is decided according to this data and the memorized data in the engine control module and the control signal is output to TERMINALS IGT1, IGT2, IGT3, IGT4. This signal controls the igniter to provide the best ignition timing for the driving conditions.
* Heated oxygen sensor heater control system
  The heated oxygen sensor heater control system turns the heater on when the intake air volume is low (Temp. of exhaust emissions is low), and warms up the heated oxygen sensor to improve detection performance of the sensor. The engine control module evaluates the signals from each sensor, and outputs current to TERMINALS HT1B and HT1C (California) to control the heater.

**3. Diagnosis System**

With the diagnosis system, when there is a malfunction in the engine control module signal system, the malfunctioning system is recorded in the memory. The malfunctioning system can be found by reading the code displayed by the malfunction indicator lamp.

**4. Fail-Safe System**

When a malfunction has occurred in any system, if there is a possibility of engine trouble being caused by continued control based on the signals from that system, the fail-safe system either controls the system by using data (Standard values) recorded in the engine control module memory or else stops the engine.

**Service Hints**

**E6 (A), E7 (B), E9 (D), E10 (E) Engine Control Module**

BATT-E1 : Always 9.0-14.0 volts
VC-E2 : 4.5-5.5 volts (Ignition SW at ON position)
VTA1-E2 : 0.3-1.0 volts (Ignition SW on and throttle valve fully closed)
3.2-4.9 volts (Ignition SW on and throttle valve fully open)
VG-E2G : 1.1-1.5 volts (Engine idling and A/C SW off)
THA-E2 : 0.5-3.4 volts (Engine idling and intake air temp. 20˚C, 68˚F)
THW-E2 : 0.2-1.0 volts (Engine idling and coolant temp. 80˚C, 176˚F)
IGF1-E1 : 4.5-5.5 volts (Ignition SW at ON position)
Pulse generation (Engine idling)
SIL-E1 : Pulse generation (During transmission)
TACH-E1 : Pulse generation (Engine idling)
STA-E1 : 6.0 volts or more (Engine cranking)
FC-E01 : 9.0-14.0 volts (Ignition SW at ON position)
SPD-E1 : Pulse generation (Ignition SW on and rotate driving wheel slowly)
W-E01 : Below 3.0 volts (Ignition SW at ON position)
NSW-E1 : 9.0-14.0 volts (Ignition SW on and other shift position in P or N position)
0-3.0 volts (Ignition SW on and shift position in P or N position)
PRG-E01 : 9.0-14.0 volts (Ignition SW at ON position)
STP-E1 : 7.5-14.0 volts (Ignition SW on and brake pedal depressed)
Below 1.5 volts (Ignition SW on and brake pedal released)
KNK1-E1 : Pulse generation (Engine idling)
PSW-E1 : 9.0-14.0 volts (Ignition SW at ON position)
HA1A-E04 : Below 3.0 volts (Engine idling)
IGSW-E1 : 9.0-14.0 volts (Ignition SW at ON position)
MREL-E1 : 9.0-14.0 volts (Ignition SW at ON position)
G2+, NE+ -NE- : Pulse generation (Engine idling)
OC1+ -OC1- : Pulse generation (Ignition SW at ON position)
HT1B-E1 : 9.0-14.0 volts (Engine idling)
Below 3.0 volts (Ignition SW at ON position)
HT1C-E1 : 9.0-14.0 volts (Engine idling)
Below 3.0 volts (Ignition SW at ON position)
AFA+ -E1 : 3.3 volts (Ignition SW at ON position)
AFA- -E1 : 3.0 volts (Ignition SW at ON position)
OX1B-E1 : Pulse generation (Maintain engine speed at 2500 rpm for 90 sec. after warming up)
OX1C-E1 : Pulse generation (Maintain engine speed at 2500 rpm for 90 sec. after warming up)
IGT1, IGT2, IGT3, IGT4-E1 : Pulse generation (Engine idling)
#10, #20, #30, #40-E01 : 9.0-14.0 volts (Ignition SW at ON position)
Pulse generation (Engine idling)

### ○ : Parts Location

| Code | See Page | Code | See Page | Code | See Page |
|---|---|---|---|---|---|
| A4 | 38 (*2) | F8 | 42 | J11 | 42 |
| A8 | 38 (*2) | H6 | 38 (*2) | J16 D | 41 |
| A18 | 40 | H13 | 41 | J17 E | 41 |
| A23 | 40 | I1 | 39 (*2) | J22 A | 41 |
| A38 B | 40 | I2 | 39 (*2) | J23 B | 41 |
| A40 A | 40 | I3 | 39 (*2) | K2 | 39 (*2) |
| C1 | 38 (*2) | I4 | 39 (*2) | M1 | 39 (*2) |
| C3 | 38 (*2) | I7 | 39 (*2) | P1 | 39 (*2) |
| C6 | 40 | I8 | 39 (*2) | S1 | 39 (*2) |
| C7 A | 40 | I9 | 39 (*2) | S14 | 41 |
| C8 B | 40 | I10 | 39 (*2) | T11 | 41 |
| D3 | 40 | I15 | 41 | T12 | 39 (*2) |
| E4 | 38 (*2) | I18 | 39 (*2) | V4 | 43 |
| E6 A | 40 | J1 | 41 | V6 | 39 (*2) |
| E7 B | 40 | J2 | 41 | V7 | 39 (*2) |
| E9 D | 40 | J5 A | 41 | V11 | 43 |
| E10 E | 40 | J6 B | 41 | | |

### ▭ : Relay Blocks

| Code | See Page | Relay Blocks (Relay Block Location) |
|---|---|---|
| 1 | 22 | Engine Room R/B (Engine Compartment Left) |

### ▭ : Junction Block and Wire Harness Connector

| Code | See Page | Junction Block and Wire Harness (Connector Location) |
|---|---|---|
| 1A | 25 | Engine Room Main Wire and Engine Room J/B (Engine Compartment Left) |
| 1B | | |
| 1C | | |
| 1D | | |
| 1E | | |
| 1H | | |
| 1J | | |
| 1K | 25 | Engine Wire and Engine Room J/B (Engine Compartment Left) |
| 1L | | |
| 2A | 28 | Instrument Panel Wire and Driver Side J/B (Lower Finish Panel) |
| 2E | 28 | Engine Room Main Wire and Driver Side J/B (Lower Finish Panel) |
| 2G | | |
| 2K | 28 | Floor Wire and Driver Side J/B (Lower Finish Panel) |
| 2L | 29 | Instrument Panel Wire and Driver Side J/B (Lower Finish Panel) |
| 2M | | |
| 2O | | |
| 2P | | |
| 2R | | |
| 2S | | |
| 3A | 34 | Instrument Panel Wire and Passenger Side J/B (Instrument Panel Brace RH) |
| 3B | | |

* 1 : 1MZ-FE, 3MZ-FE * 2 : 2AZ-FE * 3 : w/ Power Seat * 4 : w/o Power Seat

# Engine Control for 2AZ-FE

**: Connector Joining Wire Harness and Wire Harness**

| Code | See Page | Joining Wire Harness and Wire Harness (Connector Location) |
|---|---|---|
| IC2 | 50 | Instrument Panel Wire and Floor Wire (Left Kick Panel) |
| ID1 | 50 | Engine Room Main Wire and Floor Wire (Left Side of Driver Side J/B) |
| IF1 | 50 | Engine Room Main Wire and Instrument Panel Wire (Right Side of Steering Column Tube) |
| IF4 | | |
| IF6 | | |
| IJ1 | 52 | Instrument Panel Wire and Instrument Panel Wire (Instrument Panel Reinforcement RH) |
| IL1 | 52 | Engine Wire and Instrument Panel Wire (Behind the Glove Box) |
| IL2 | | |

**: Ground Points**

| Code | See Page | Ground Points Location |
|---|---|---|
| EC | 48 (*2) | Left Fender |
| ED | | |
| EG | 48 (*2) | Left Side of Cylinder Head |
| EH | 48 (*2) | Intake Side of Cylinder Block |
| II | 50 | Cowl Side Panel LH |
| BQ | 54 | Front Side of Rear Quarter Wheel House LH |

**: Splice Points**

| Code | See Page | Wire Harness with Splice Points | Code | See Page | Wire Harness with Splice Points |
|---|---|---|---|---|---|
| E12 | 48 (*2) | Engine Wire | I6 | 52 | Engine Wire |
| E13 | | | I7 | | |
| E14 | | | I8 | | |
| E15 | | | I10 | 52 | Engine Room Main Wire |
| I1 | 52 | Engine Room Main Wire | B17 | 54 | Floor Wire |

* 1 : 1MZ-FE, 3MZ-FE * 2 : 2AZ-FE * 3 : w/ Power Seat * 4 : w/o Power Seat

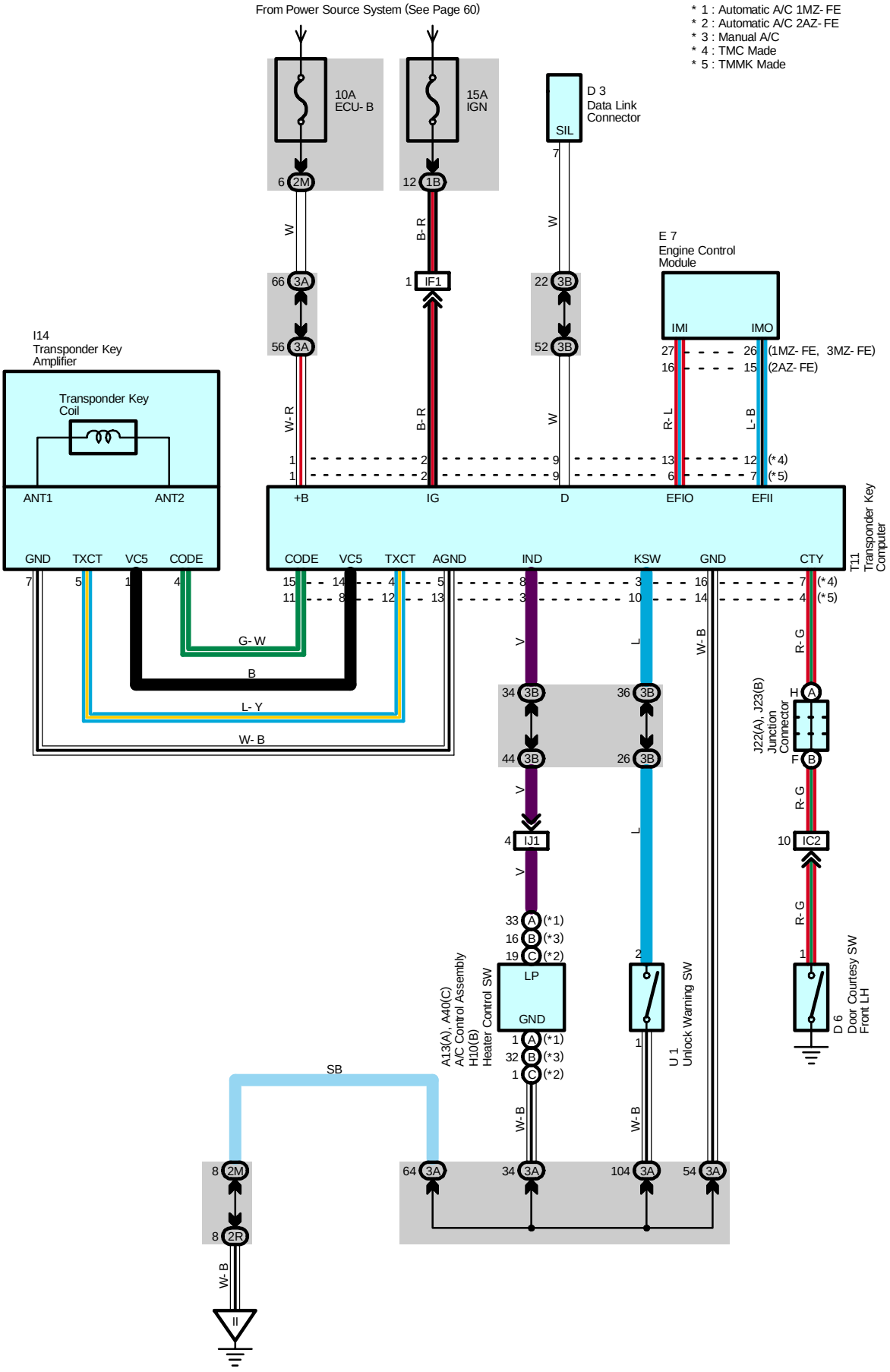
From Power Source System (See Page 60)
* 1 : Automatic A/C 1MZ- FE
* 2 : Automatic A/C 2AZ- FE
* 3 : Manual A/C
* 4 : TMC Made
* 5 : TMMK Made
10A ECU- B
15A IGN
D 3 Data Link Connector
SIL
E 7 Engine Control Module
IMI
IMO
(1MZ- FE, 3MZ- FE)
(2AZ- FE)
I14 Transponder Key Amplifier
Transponder Key Coil
ANT1
ANT2
+B
IG
D
EFIO
EFII
T11 Transponder Key Computer
GND
TXCT
VC5
CODE
AGND
IND
KSW
CTY
G- W
B
L- Y
W- B
W
B- R
W- R
R- L
L- B
V
L
R- G
SB
J22(A), J23(B) Junction Connector
A13(A), A40(C) A/C Control Assembly
H10(B) Heater Control SW
LP
U 1 Unlock Warning SW
D 6 Door Courtesy SW Front LH

**Service Hints**

**T11 Transponder Key Computer**

1-Ground : Always approx. 12 volts
2-Ground : Approx. 12 volts with ignition SW at ON or ST position
14 (TMMK Made), 16 (TMC Made)-Ground : Always continuity
10 (TMMK Made), 3 (TMC Made)-Ground : Continuity with the key in cylinder

**○ : Parts Location**

| Code | See Page | Code | See Page | Code | See Page |
|---|---|---|---|---|---|
| A13 A | 40 | E7 | 40 | J23 B | 41 |
| A40 C | 40 | H10 B | 41 | T11 | 41 |
| D3 | 40 | I14 | 41 | U1 | 41 |
| D6 | 42 | J22 A | 41 | | |

**: Junction Block and Wire Harness Connector**

| Code | See Page | Junction Block and Wire Harness (Connector Location) |
|---|---|---|
| 1B | 25 | Engine Room Main Wire and Engine Room J/B (Engine Compartment Left) |
| 2M | 29 | Instrument Panel Wire and Driver Side J/B (Lower Finish Panel) |
| 2R | | |
| 3A | 34 | Instrument Panel Wire and Passenger Side J/B (Instrument Panel Brace RH) |
| 3B | | |

**: Connector Joining Wire Harness and Wire Harness**

| Code | See Page | Joining Wire Harness and Wire Harness (Connector Location) |
|---|---|---|
| IC2 | 50 | Instrument Panel Wire and Floor Wire (Left Kick Panel) |
| IF1 | 50 | Engine Room Main Wire and Instrument Panel Wire (Right Side of Steering Column Tube) |
| IJ1 | 52 | Instrument Panel Wire and Instrument Panel Wire (Instrument Panel Reinforcement RH) |

**▽ : Ground Points**

| Code | See Page | Ground Points Location |
|---|---|---|
| II | 50 | Cowl Side Panel LH |

* 1 : 1MZ-FE, 3MZ-FE * 2 : 2AZ-FE * 3 : w/ Power Seat * 4 : w/o Power Seat

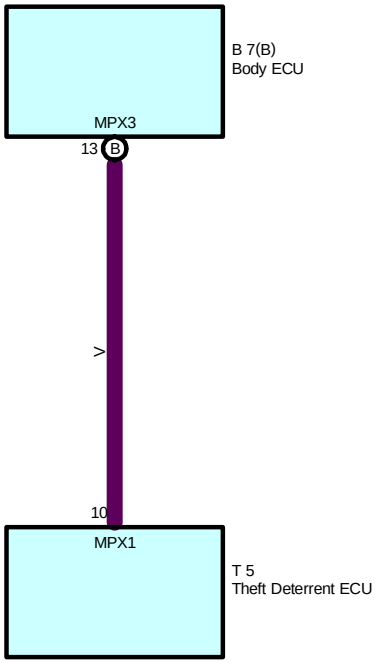
B 7(B)
Body ECU
MPX3
13
B
>
10
MPX1
T 5
Theft Deterrent ECU

**System Outline**

The multiplex communication system communicates among the body ECU, theft deterrent ECU and controls the following systems according to the signals from respective sensors or switches.

**Multiplex Communication System Includes Following Systems**

- **Automatic Light Control**
- **Door Lock Control**
- **Headlight**
- **Interior Light**
- **Key Reminder**
- **Light Auto Turn Off System**
- **Theft Deterrent**
- **Wireless Door Lock Control**

○ **: Parts Location**

| Code | | See Page | Code | See Page | Code | See Page |
|---|---|---|---|---|---|---|
| B7 | B | 40 | T5 | 41 | | |

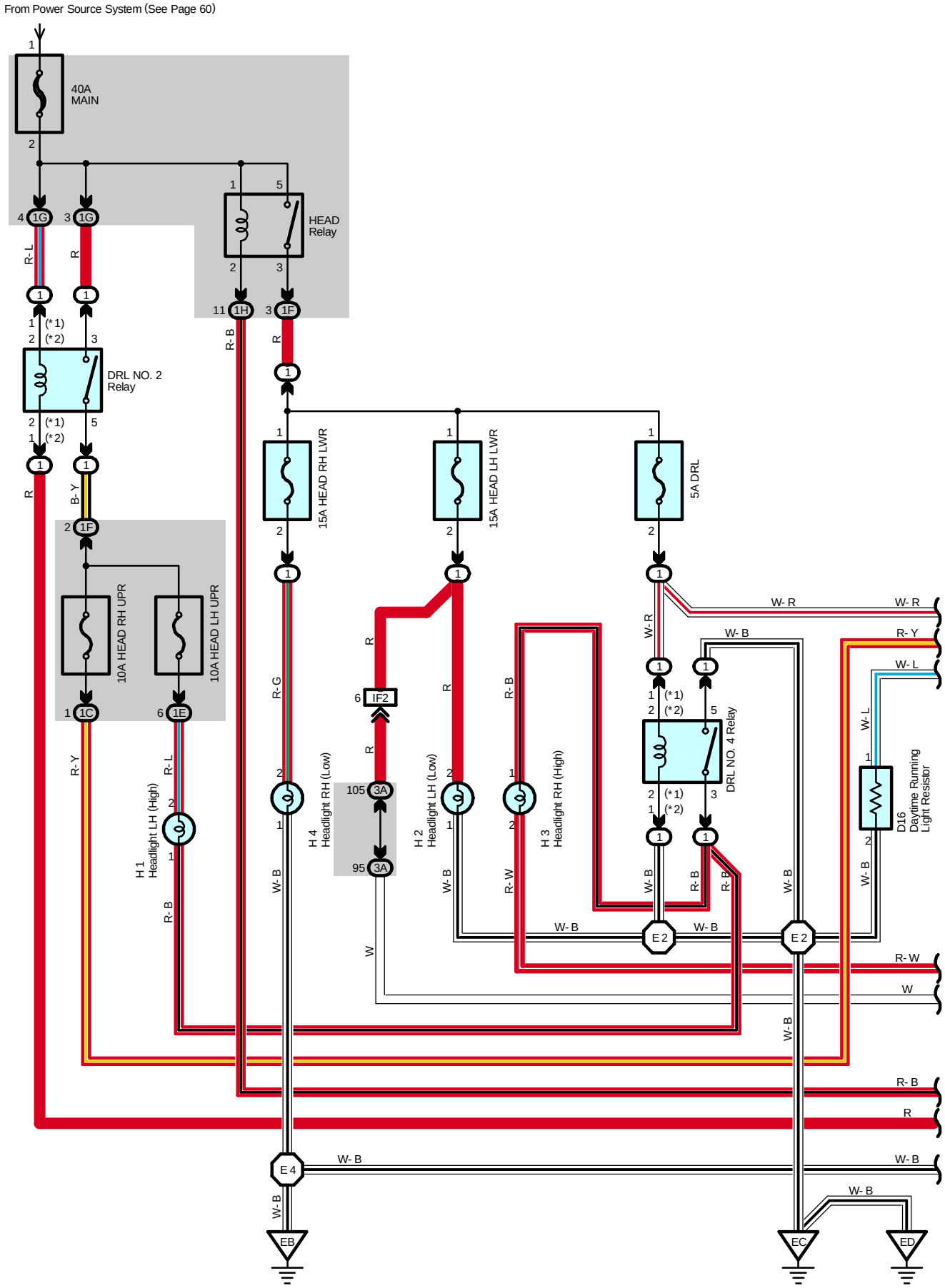
From Power Source System (See Page 60)
40A MAIN
HEAD Relay
DRL NO. 2 Relay
15A HEAD RH LWR
15A HEAD LH LWR
5A DRL
10A HEAD RH UPR
10A HEAD LH UPR
DRL NO. 4 Relay
D16 Daytime Running Light Resistor
H 1 Headlight LH (High)
H 2 Headlight LH (Low)
H 3 Headlight RH (High)
H 4 Headlight RH (Low)
IF2
E 2
E 4
EB
EC
ED

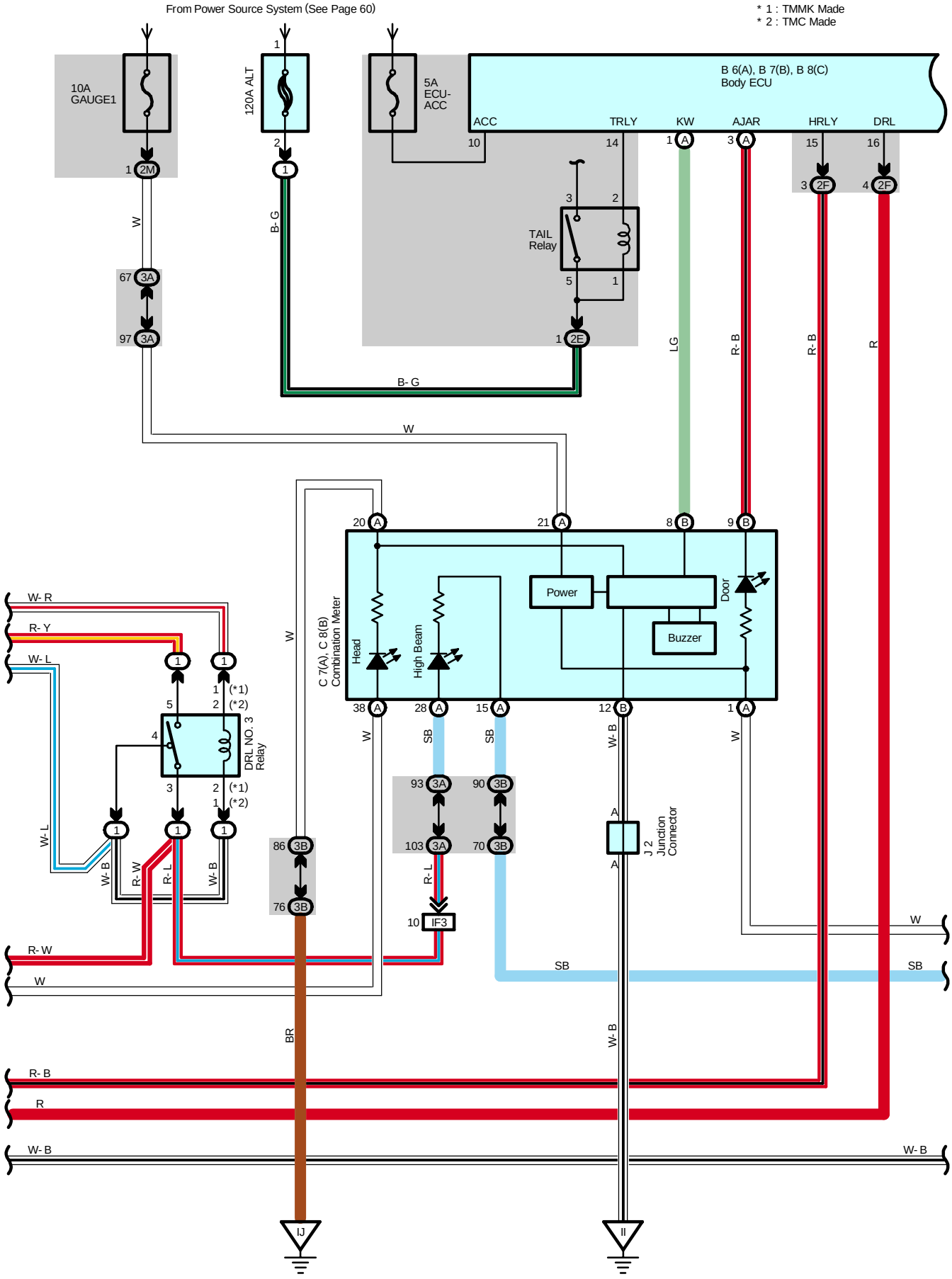
From Power Source System (See Page 60)
* 1 : TMMK Made
* 2 : TMC Made
10A GAUGE1
120A ALT
5A ECU-ACC
B 6(A), B 7(B), B 8(C) Body ECU
ACC
TRLY
KW
AJAR
HRLY
DRL
TAIL Relay
W
B- G
LG
R- B
R
C 7(A), C 8(B) Combination Meter
Head
High Beam
Power
Door
Buzzer
DRL NO. 3 Relay
W- R
R- Y
W- L
R- W
R- L
W- B
SB
BR
J 2 Junction Connector
IF3
IJ
II

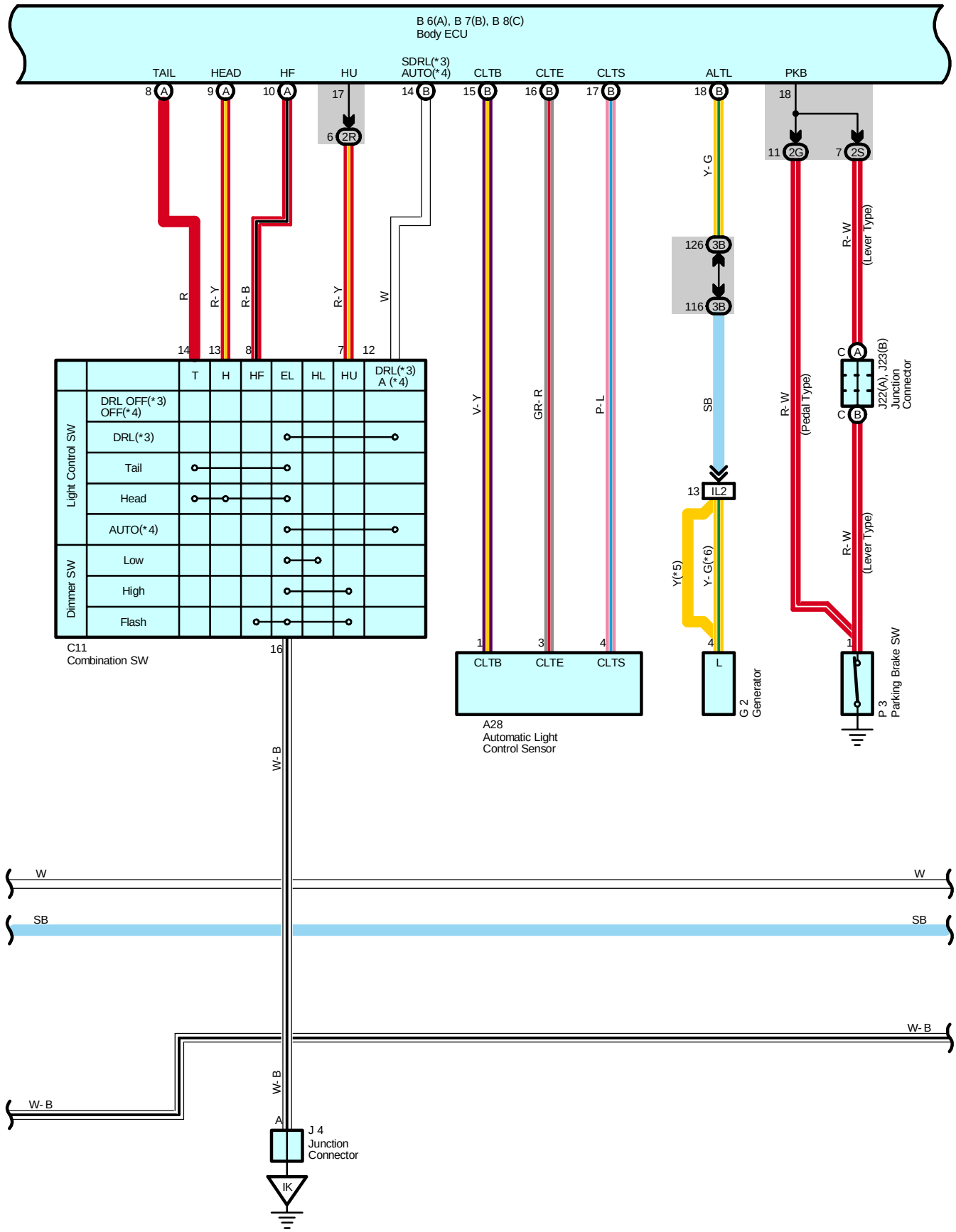
B 6(A), B 7(B), B 8(C)
Body ECU
TAIL
HEAD
HF
HU
SDRL(*3)
AUTO(*4)
CLTB
CLTE
CLTS
ALTL
PKB
R
R- Y
R- B
R- Y
W
V- Y
GR- R
P- L
Y- G
SB
Y(*5)
Y- G(*6)
R- W
(Pedal Type)
R- W
(Lever Type)
R- W
(Lever Type)
T
H
HF
EL
HL
HU
DRL(*3)
A (*4)
DRL OFF(*3)
OFF(*4)
DRL(*3)
Tail
Head
AUTO(*4)
Low
High
Flash
Light Control SW
Dimmer SW
C11
Combination SW
A28
Automatic Light
Control Sensor
CLTB
CLTE
CLTS
IL2
L
G 2
Generator
J22(A), J23(B)
Junction
Connector
P 3
Parking Brake SW
W
SB
W- B
W- B
W- B
J 4
Junction
Connector
IK

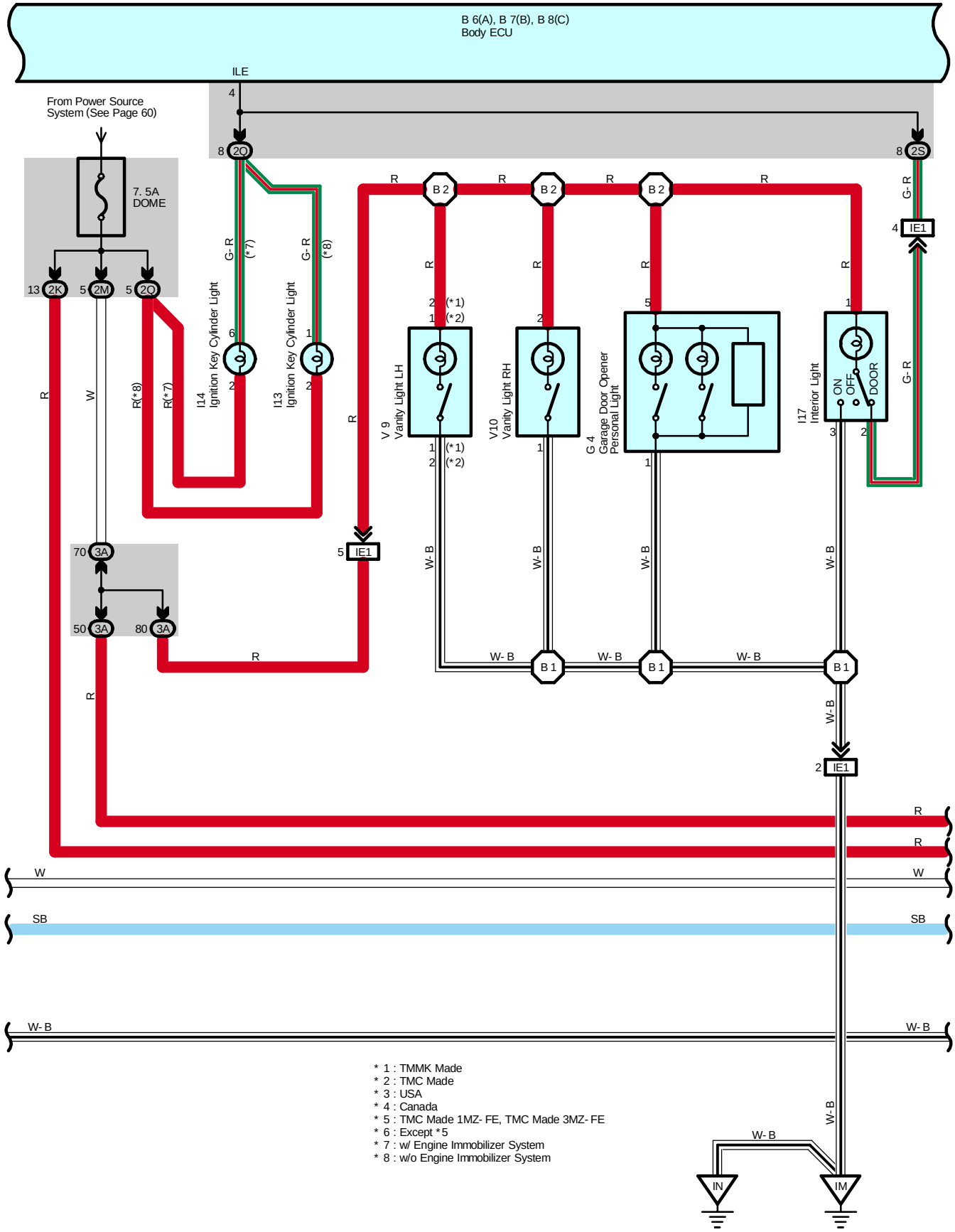
B 6(A), B 7(B), B 8(C)
Body ECU
ILE
From Power Source System (See Page 60)
7. 5A DOME
I14 Ignition Key Cylinder Light
I13 Ignition Key Cylinder Light
V 9 Vanity Light LH
V10 Vanity Light RH
G 4 Garage Door Opener Personal Light
I17 Interior Light
ON
OFF
DOOR
IE1
B 2
B 1
3A
2K
2M
2Q
2S
IN
IM
R
W
SB
W- B
G- R
R(*8)
R(*7)
(*1)
(*2)
(*7)
(*8)
* 1 : TMMK Made
* 2 : TMC Made
* 3 : USA
* 4 : Canada
* 5 : TMC Made 1MZ- FE, TMC Made 3MZ- FE
* 6 : Except *5
* 7 : w/ Engine Immobilizer System
* 8 : w/o Engine Immobilizer System

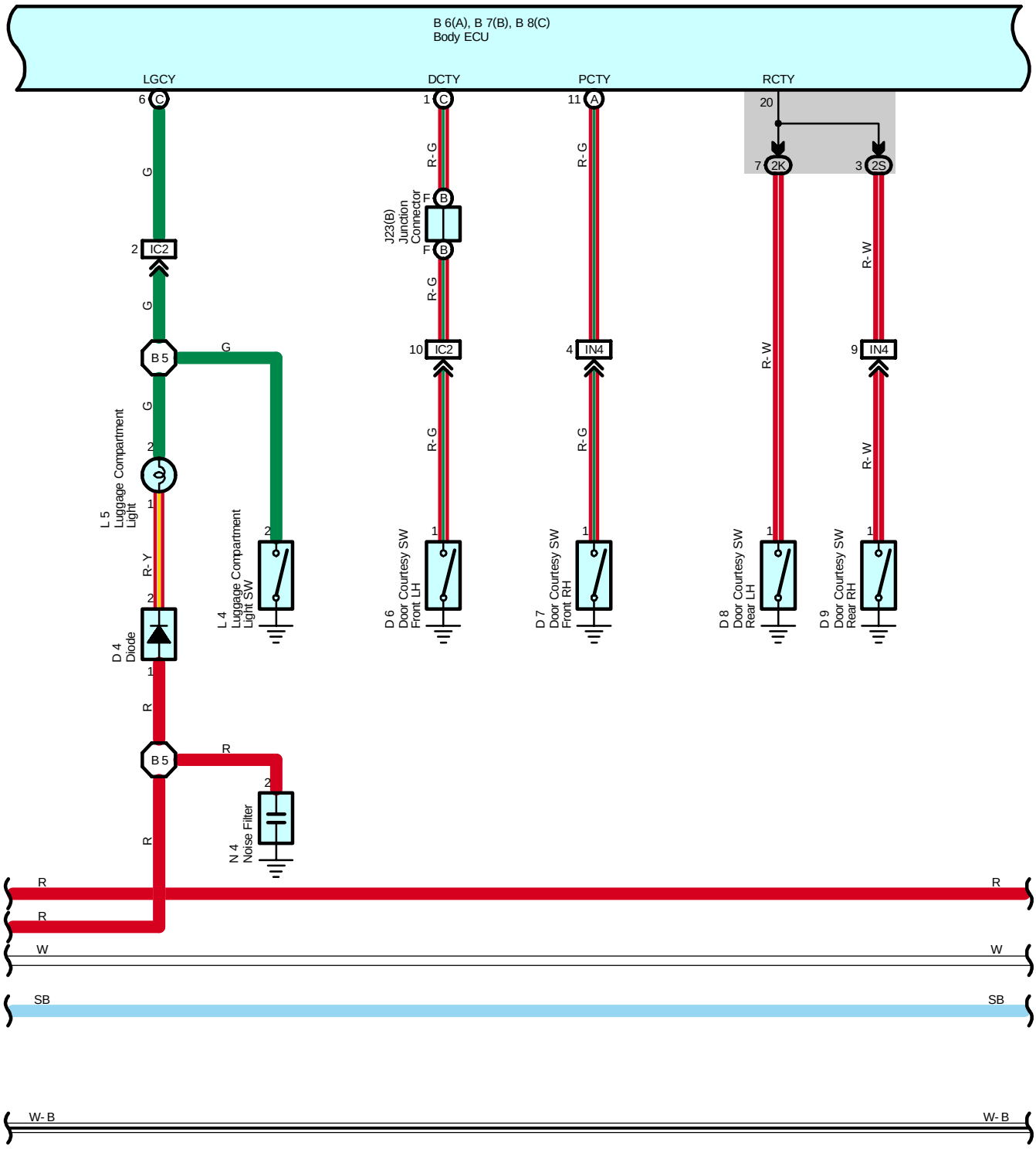
B 6(A), B 7(B), B 8(C)
Body ECU
LGCY
DCTY
PCTY
RCTY
6 C
1 C
11 A
20
7 2K
3 2S
G
R-G
R-W
2 IC2
J23(B) Junction Connector
F B
10 IC2
4 IN4
9 IN4
B 5
L 5 Luggage Compartment Light
L 4 Luggage Compartment Light SW
D 4 Diode
N 4 Noise Filter
D 6 Door Courtesy SW Front LH
D 7 Door Courtesy SW Front RH
D 8 Door Courtesy SW Rear LH
D 9 Door Courtesy SW Rear RH
R-Y
R
W
SB
W-B

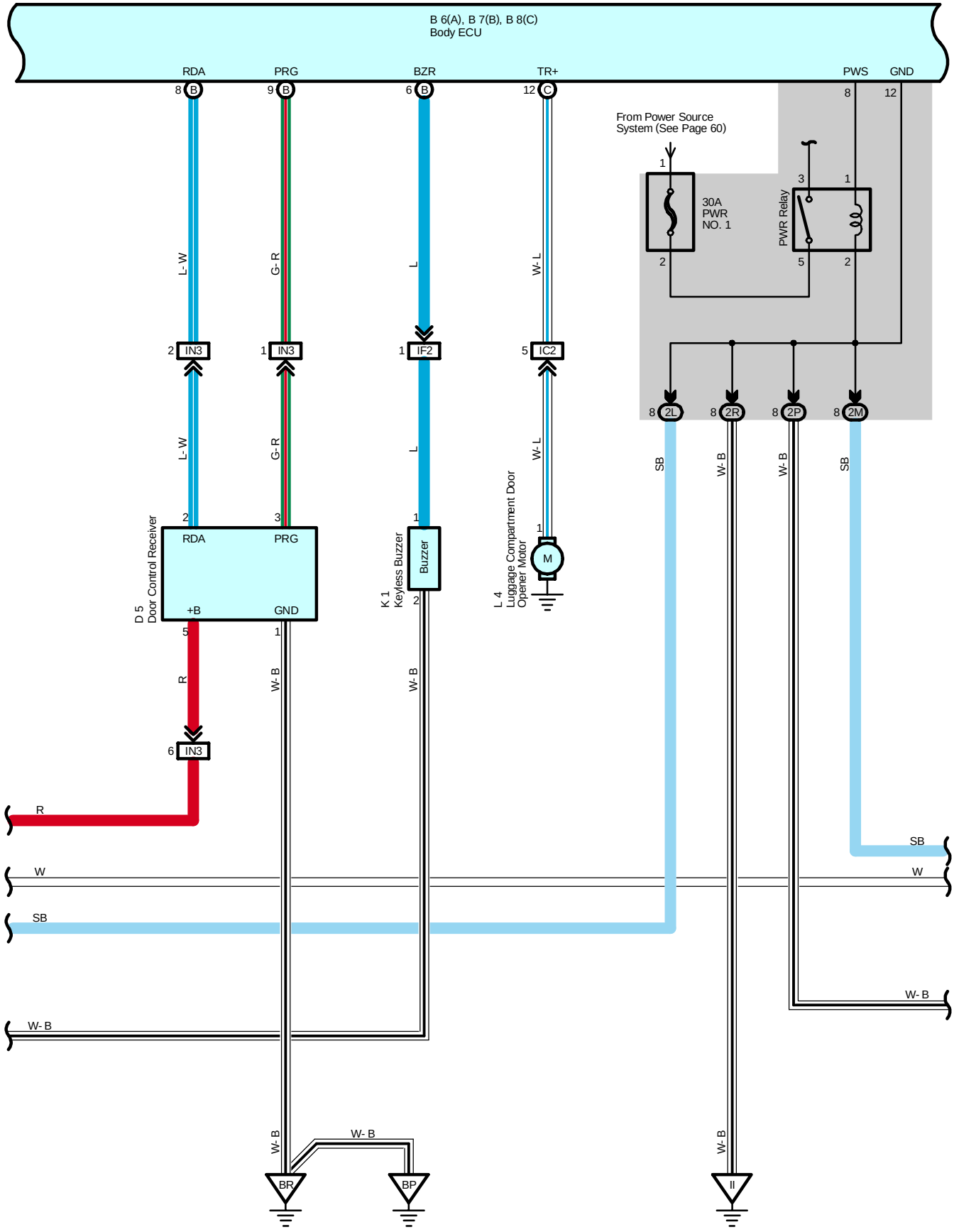
B 6(A), B 7(B), B 8(C)
Body ECU
RDA
PRG
BZR
TR+
PWS
GND
From Power Source System (See Page 60)
30A PWR NO. 1
PWR Relay
L- W
G- R
L
W- L
IN3
IF2
IC2
2L
2R
2P
2M
D 5 Door Control Receiver
+B
K 1 Keyless Buzzer
Buzzer
L 4 Luggage Compartment Door Opener Motor
M
R
SB
W- B
W
BR
BP
IL

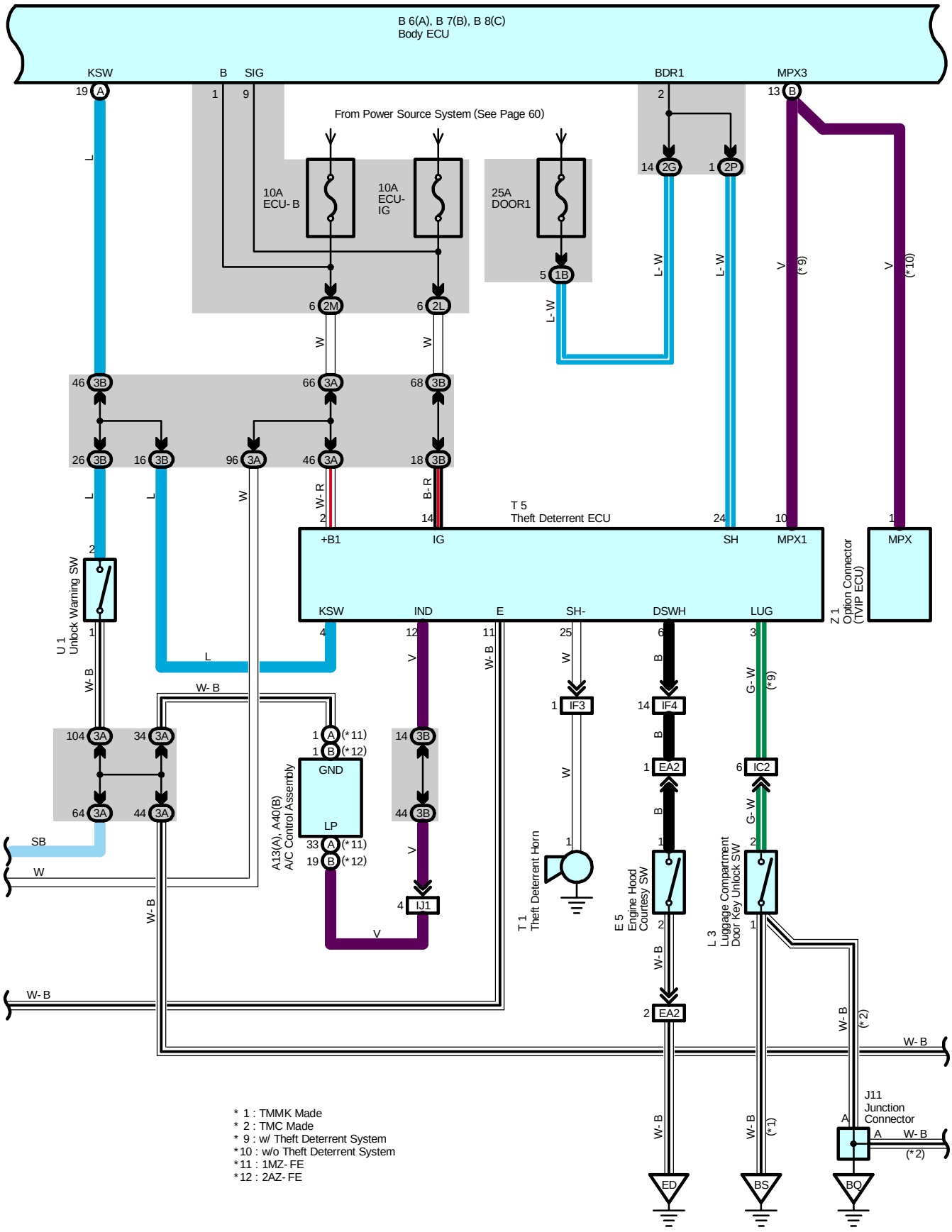
B 6(A), B 7(B), B 8(C)
Body ECU
KSW
B
SIG
BDR1
MPX3
From Power Source System (See Page 60)
10A ECU- B
10A ECU- IG
25A DOOR1
T 5
Theft Deterrent ECU
+B1
IG
SH
MPX1
MPX
KSW
IND
E
SH-
DSWH
LUG
U 1
Unlock Warning SW
Z 1
Option Connector (TVIP ECU)
A13(A), A40(B)
A/C Control Assembly
GND
LP
T 1
Theft Deterrent Horn
E 5
Engine Hood Courtesy SW
L 3
Luggage Compartment Door Key Unlock SW
J11
Junction Connector
ED
BS
BQ
* 1 : TMMK Made
* 2 : TMC Made
* 9 : w/ Theft Deterrent System
*10 : w/o Theft Deterrent System
*11 : 1MZ- FE
*12 : 2AZ- FE

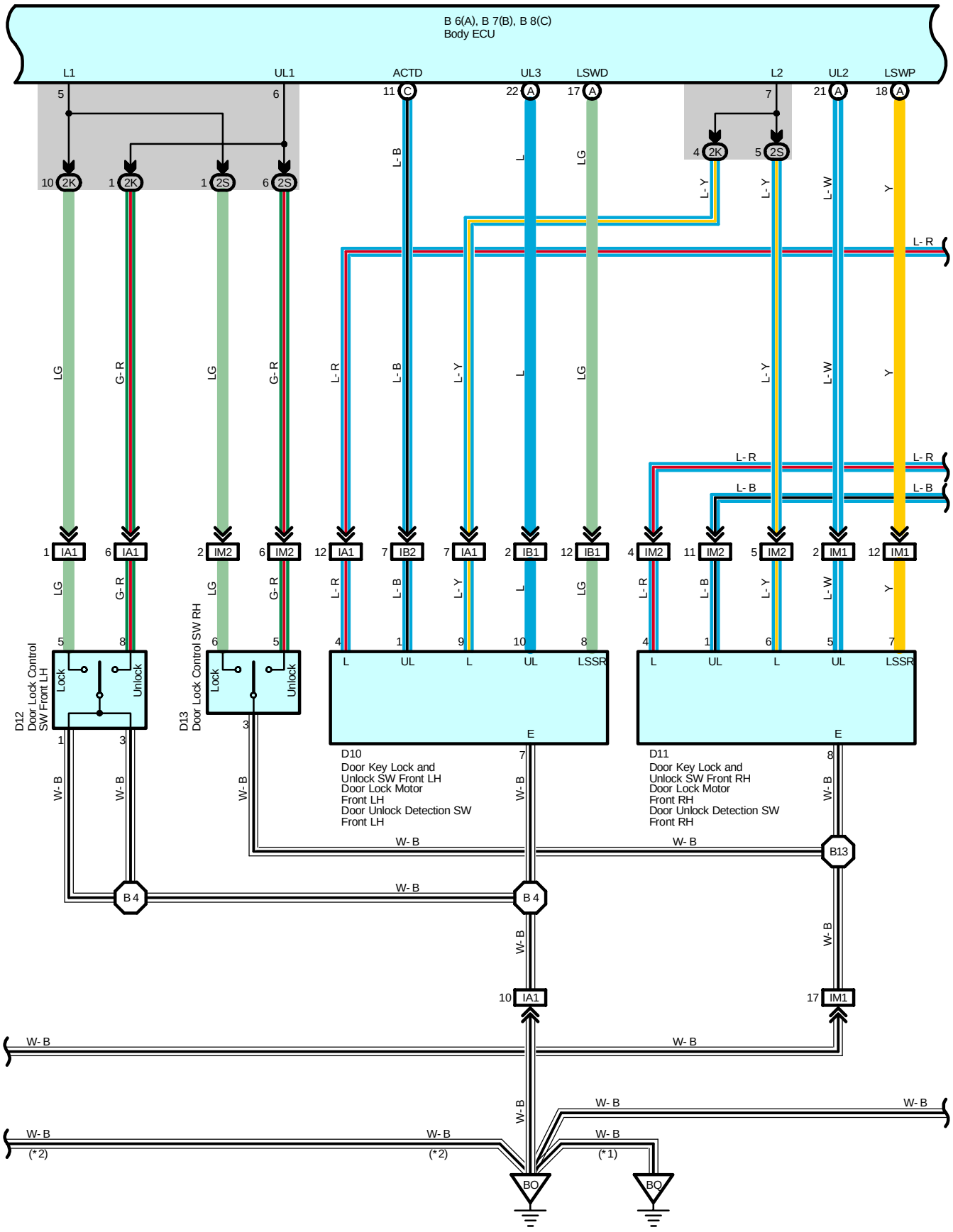
B 6(A), B 7(B), B 8(C)
Body ECU
L1
UL1
ACTD
UL3
LSWD
L2
UL2
LSWP
D12
Door Lock Control SW Front LH
D13
Door Lock Control SW RH
D10
Door Key Lock and Unlock SW Front LH
Door Lock Motor Front LH
Door Unlock Detection SW Front LH
D11
Door Key Lock and Unlock SW Front RH
Door Lock Motor Front RH
Door Unlock Detection SW Front RH
B 4
B13
BO
W- B
L- R
L- B
L- Y
L- W
LG
G- R
L
Y

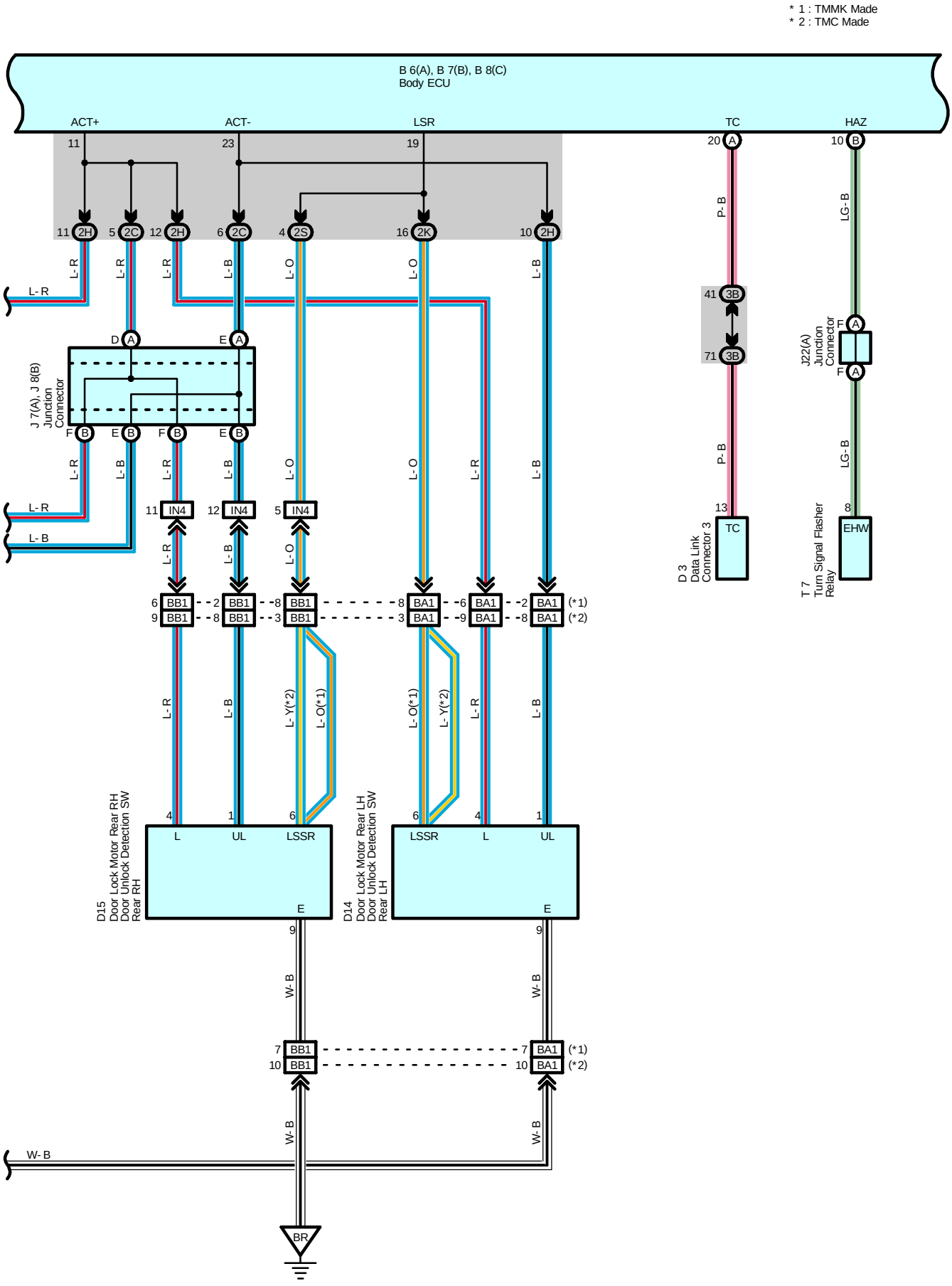
* 1 : TMMK Made
* 2 : TMC Made
B 6(A), B 7(B), B 8(C)
Body ECU
ACT+
ACT-
LSR
TC
HAZ
J 7(A), J 8(B) Junction Connector
J22(A) Junction Connector
D 3 Data Link Connector 3
T 7 Turn Signal Flasher Relay
D15 Door Lock Motor Rear RH Door Unlock Detection SW Rear RH
D14 Door Lock Motor Rear LH Door Unlock Detection SW Rear LH
L- R
L- B
P- B
LG- B
L- O
L- Y(*2)
L- O(*1)
W- B
BR

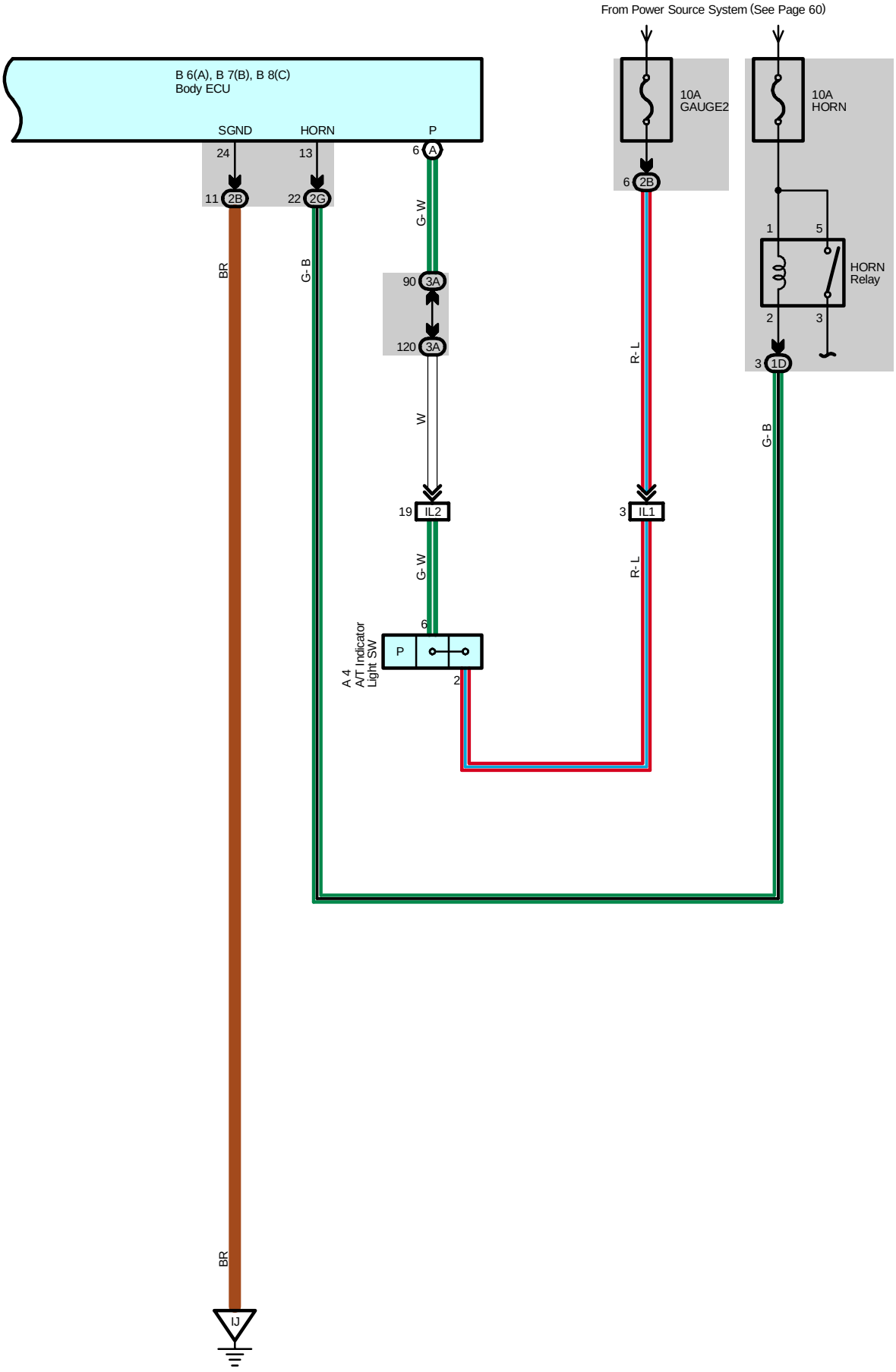
From Power Source System (See Page 60)
B 6(A), B 7(B), B 8(C)
Body ECU
SGND
HORN
P
24
13
6 A
11 2B
22 2G
BR
G-B
G-W
90 3A
120 3A
W
19 IL2
G-W
6
P
2
A 4
A/T Indicator
Light SW
BR
IJ
10A
GAUGE2
6 2B
R-L
3 IL1
R-L
10A
HORN
1
5
HORN
Relay
2
3
3 1D
G-B

# Multiplex Communication System - BEAN

**Service Hints**

**Body ECU**

10-Ground : Approx. 12 volts with the ignition SW at ACC or ON position
9-Ground : Approx. 12 volts with the ignition SW at ON or ST position
12, 24-Ground : Always continuity
1-Ground : Always approx. 12 volts

**: Parts Location**

| Code | See Page | Code | See Page | Code | See Page |
|---|---|---|---|---|---|
| A4 | 36 (*1) | D14 | 42 | J7 A | 41 |
| | 38 (*2) | D15 | 42 | J8 B | 41 |
| A13 A | 40 | D16 | 36 (*1) | J11 | 42 |
| A28 | 40 | | 38 (*2) | J22 A | 41 |
| A40 B | 40 | E5 | 36 (*1) | J23 B | 41 |
| B6 A | 40 | | 38 (*2) | K1 | 37 (*1) |
| B7 B | 40 | G2 | 36 (*1) | | 39 (*2) |
| B8 C | 40 | | 38 (*2) | L3 | 43 |
| C7 A | 40 | G4 | 42 | L4 | 43 |
| C8 B | 40 | H1 | 36 (*1) | L5 | 43 |
| C11 | 40 | | 38 (*2) | N4 | 43 |
| D3 | 40 | H2 | 36 (*1) | P3 | 41 |
| D4 | 42 | | 38 (*2) | T1 | 37 (*1) |
| D5 | 42 | H3 | 36 (*1) | | 39 (*2) |
| D6 | 42 | | 38 (*2) | T5 | 41 |
| D7 | 42 | H4 | 36 (*1) | T7 | 41 |
| D8 | 42 | | 38 (*2) | U1 | 41 |
| D9 | 42 | I13 | 41 | V9 | 43 |
| D10 | 42 | I14 | 41 | V10 | 43 |
| D11 | 42 | I17 | 42 | Z1 | 41 |
| D12 | 42 | J2 | 41 | | |
| D13 | 42 | J4 | 41 | | |

**: Relay Blocks**

| Code | See Page | Relay Blocks (Relay Block Location) |
|---|---|---|
| 1 | 22 | Engine Room R/B (Engine Compartment Left) |

* 1 : 1MZ-FE, 3MZ-FE * 2 : 2AZ-FE * 3 : w/ Power Seat * 4 : w/o Power Seat

**: Junction Block and Wire Harness Connector**

| Code | See Page | Junction Block and Wire Harness (Connector Location) |
|---|---|---|
| 1B | 25 | Engine Room Main Wire and Engine Room J/B (Engine Compartment Left) |
| 1C | | |
| 1D | | |
| 1E | | |
| 1F | | |
| 1G | | |
| 1H | | |
| 2B | 28 | Instrument Panel Wire and Driver Side J/B (Lower Finish Panel) |
| 2C | | |
| 2E | 28 | Engine Room Main Wire and Driver Side J/B (Lower Finish Panel) |
| 2F | | |
| 2G | | |
| 2H | 28 | Floor Wire and Driver Side J/B (Lower Finish Panel) |
| 2K | | |
| 2L | 29 | Instrument Panel Wire and Driver Side J/B (Lower Finish Panel) |
| 2M | | |
| 2P | | |
| 2Q | | |
| 2R | | |
| 2S | | |
| 3A | 34 | Instrument Panel Wire and Passenger Side J/B (Instrument Panel Brace RH) |
| 3B | | |

**: Connector Joining Wire Harness and Wire Harness**

| Code | See Page | Joining Wire Harness and Wire Harness (Connector Location) |
|---|---|---|
| EA2 | 46 (*1) | Engine Room Main Wire and Engine Room No.2 Wire (Radiator Side Support LH) |
| | 48 (*2) | |
| IA1 | 50 | Front Door LH Wire and Floor Wire (Left Kick Panel) |
| IB1 | 50 | Front Door LH Wire and Instrument Panel Wire (Left Kick Panel) |
| IB2 | | |
| IC2 | 50 | Instrument Panel Wire and Floor Wire (Left Kick Panel) |
| IE1 | 50 | Instrument Panel Wire and Roof Wire (Inside of Front Left Pillar) |
| IF2 | 50 | Engine Room Main Wire and Instrument Panel Wire (Right Side of Steering Column Tube) |
| IF3 | | |
| IF4 | | |
| IJ1 | 52 | Instrument Panel Wire and Instrument Panel Wire (Instrument Panel Reinforcement RH) |
| IL1 | 52 | Engine Wire and Instrument Panel Wire (Behind the Glove Box) |
| IL2 | | |
| IM1 | 52 | Front Door RH Wire and Instrument Panel Wire (Right Kick Panel) |
| IM2 | | |
| IN3 | 52 | Instrument Panel Wire and Floor No.2 Wire (Right Kick Panel) |
| IN4 | | |
| BA1 | 54 | Rear Door LH Wire and Floor Wire (Left Center Pillar) |
| BB1 | 54 | Rear Door RH Wire and Floor No.2 Wire (Right Center Pillar) |

* 1 : 1MZ-FE, 3MZ-FE * 2 : 2AZ-FE * 3 : w/ Power Seat * 4 : w/o Power Seat

▽ : **Ground Points**

| Code | See Page | Ground Points Location |
|---|---|---|
| EB | 46 (*1) | Right Fender |
| | 48 (*2) | |
| EC | 46 (*1) | Left Fender |
| | 48 (*2) | |
| ED | 46 (*1) | |
| | 48 (*2) | |
| II | 50 | Cowl Side Panel LH |
| IJ | 50 | Instrument Panel Brace LH |
| IK | | |
| IM | 50 | Instrument Panel Reinforcement RH |
| IN | | |
| BO | 54 | Under the Driver's Seat |
| BP | 54 | Under the Front Passenger's Seat |
| BQ | 54 | Front Side of Rear Quarter Wheel House LH |
| BR | 54 | Front Side of Rear Quarter Wheel House RH |
| BS | 54 | Lower Back Panel Center |

○ : **Splice Points**

| Code | See Page | Wire Harness with Splice Points | Code | See Page | Wire Harness with Splice Points |
|---|---|---|---|---|---|
| E2 | 46 (*1) | Engine Room Main Wire | B2 | 54 | Roof Wire |
| | 48 (*2) | | B4 | 54 | Front Door LH Wire |
| E4 | 46 (*1) | | B5 | 54 | Floor Wire |
| | 48 (*2) | | B13 | 54 | Front Door RH Wire |
| B1 | 54 | Roof Wire | | | |

* 1 : 1MZ-FE, 3MZ-FE * 2 : 2AZ-FE * 3 : w/ Power Seat * 4 : w/o Power Seat

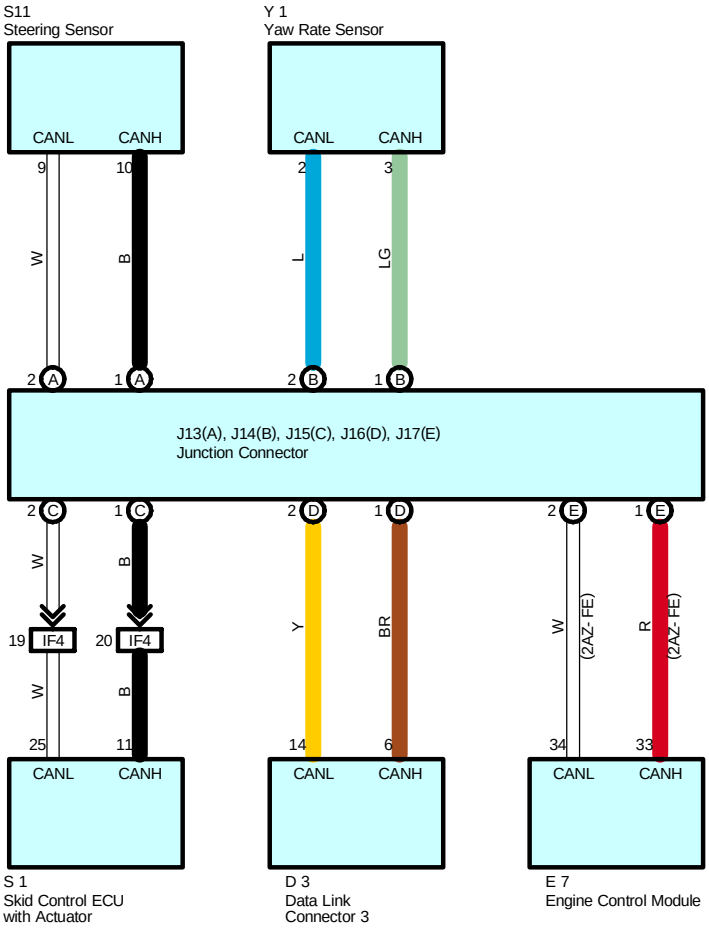
S11
Steering Sensor
CANL
CANH
9
10
W
B
2 A
1 A
Y 1
Yaw Rate Sensor
CANL
CANH
2
3
L
LG
2 B
1 B
J13(A), J14(B), J15(C), J16(D), J17(E)
Junction Connector
2 C
1 C
2 D
1 D
2 E
1 E
W
B
Y
BR
W
(2AZ- FE)
R
(2AZ- FE)
19 IF4
20 IF4
W
B
25
11
14
6
34
33
CANL
CANH
CANL
CANH
CANL
CANH
S 1
Skid Control ECU
with Actuator
D 3
Data Link
Connector 3
E 7
Engine Control Module

**System Outline**

Multiplex communication system (CAN bus) uses a serial communication protocol and communicates with a differential voltage. In this network system, TERMINALS CANH and CANL are used for communication between the ECUs and sensors, and excellent data communication speed and communication error detecting facility are provided. This system is working for the following system:

* VSC

**○ : Parts Location**

| Code | | See Page | Code | | See Page | Code | See Page |
|---|---|---|---|---|---|---|---|
| D3 | | 40 | J15 | C | 41 | S1 | 39 (*2) |
| E7 | | 40 | J16 | D | 41 | S11 | 41 |
| J13 | A | 41 | J17 | E | 41 | Y1 | 41 |
| J14 | B | 41 | S1 | | 37 (*1) | | |

**▭ : Connector Joining Wire Harness and Wire Harness**

| Code | See Page | Joining Wire Harness and Wire Harness (Connector Location) |
|---|---|---|
| IF4 | 50 | Engine Room Main Wire and Instrument Panel Wire (Right Side of Steering Column Tube) |

* 1 : 1MZ-FE, 3MZ-FE * 2 : 2AZ-FE * 3 : w/ Power Seat * 4 : w/o Power Seat

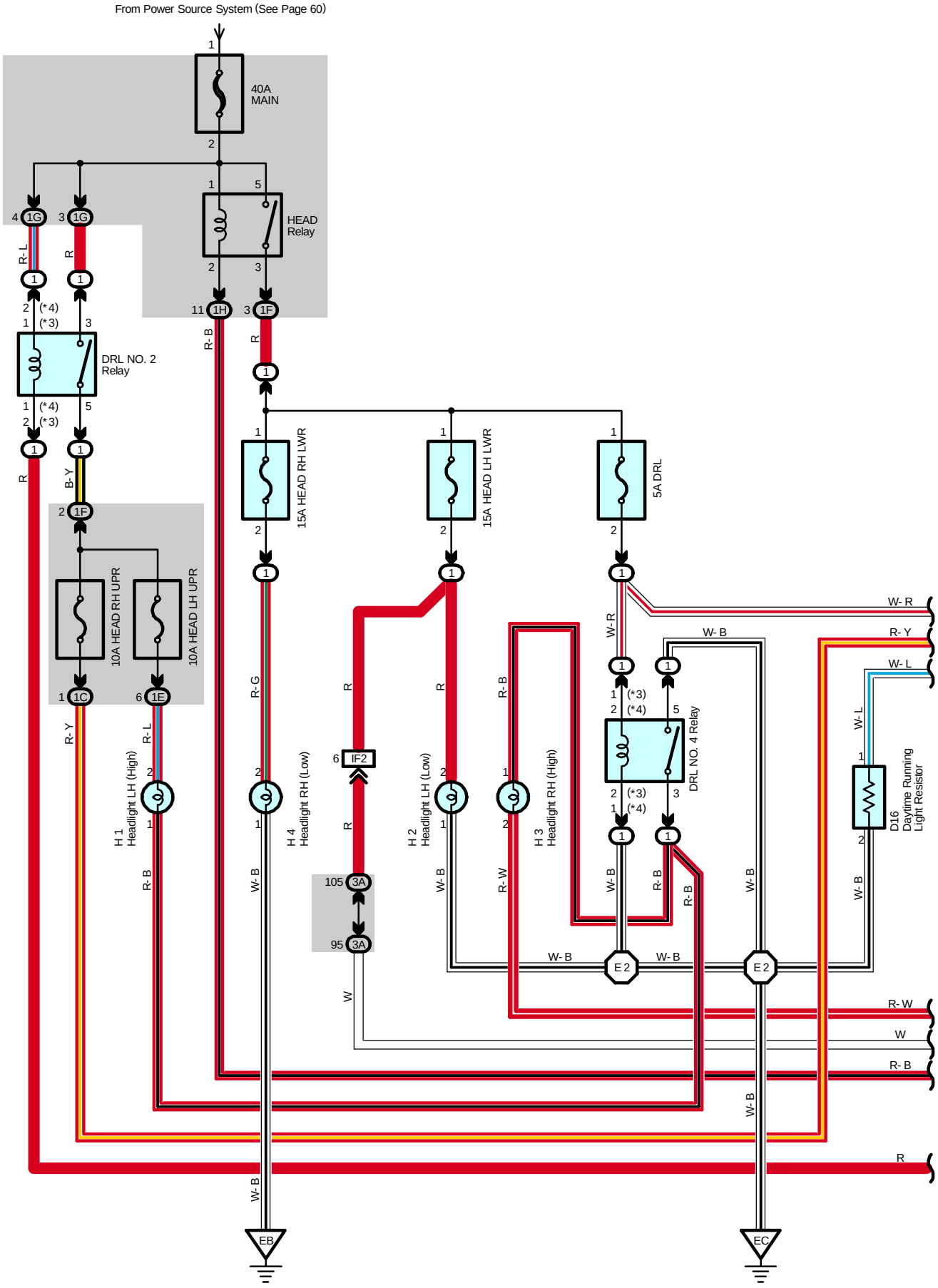
From Power Source System (See Page 60)
40A MAIN
HEAD Relay
DRL NO. 2 Relay
15A HEAD RH LWR
15A HEAD LH LWR
5A DRL
10A HEAD RH UPR
10A HEAD LH UPR
DRL NO. 4 Relay
D16 Daytime Running Light Resistor
H 1 Headlight LH (High)
H 2 Headlight LH (Low)
H 3 Headlight RH (High)
H 4 Headlight RH (Low)
IF2
3A
E 2
EB
EC
R- L
R
B- Y
R- B
R- G
R- Y
W- B
W- R
R- W
W
W- L
R- Y

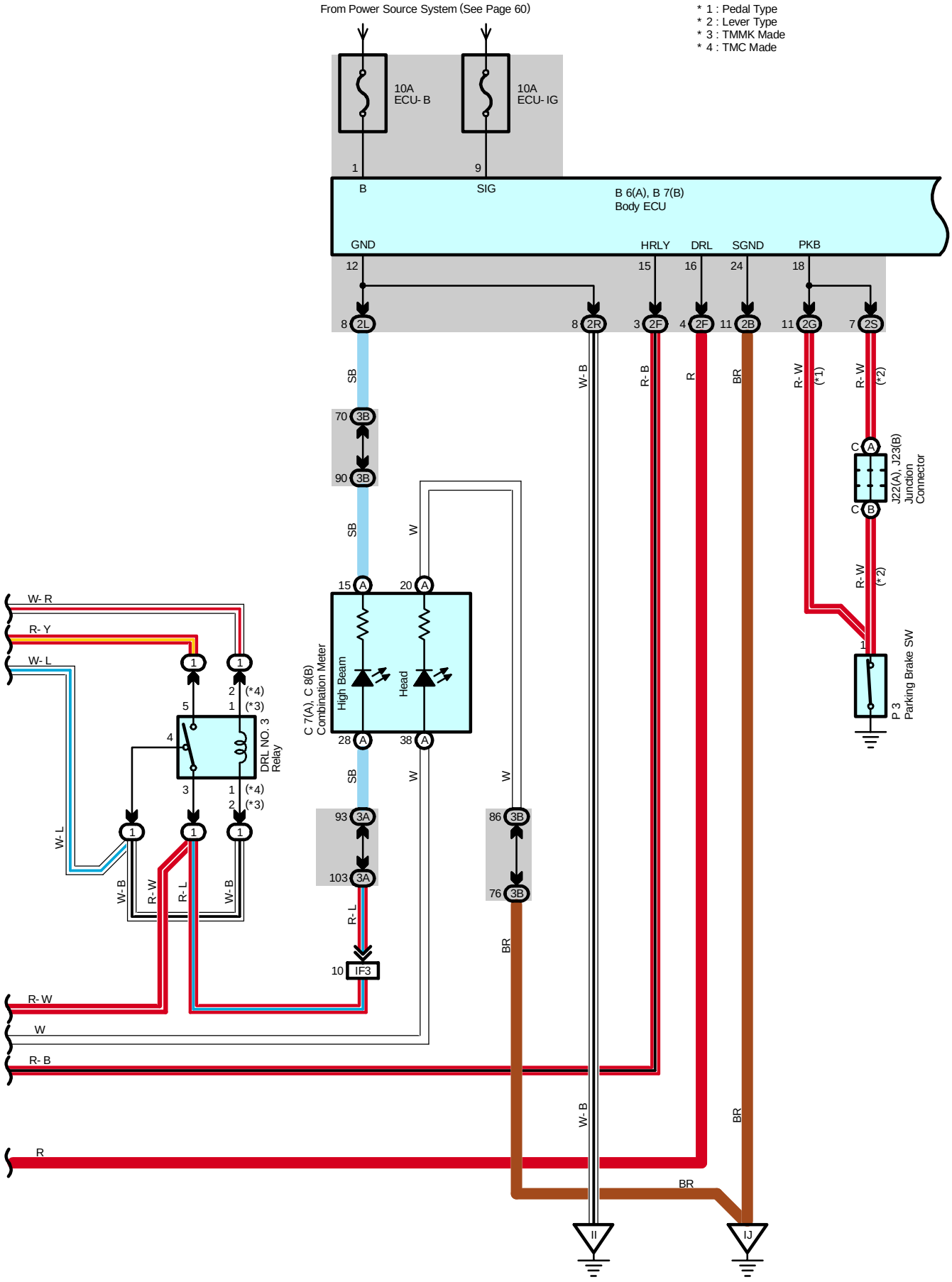
From Power Source System (See Page 60)
* 1 : Pedal Type
* 2 : Lever Type
* 3 : TMMK Made
* 4 : TMC Made
10A ECU- B
10A ECU- IG
B
SIG
B 6(A), B 7(B) Body ECU
GND
HRLY
DRL
SGND
PKB
C 7(A), C 8(B) Combination Meter
High Beam
Head
DRL NO. 3 Relay
J22(A), J23(B) Junction Connector
P 3 Parking Brake SW
IF3
II
IJ

* 5 : USA
* 6 : Canada
* 7 : TMC Made 1MZ- FE, TMC Made 3MZ- FE
* 8 : Except *7

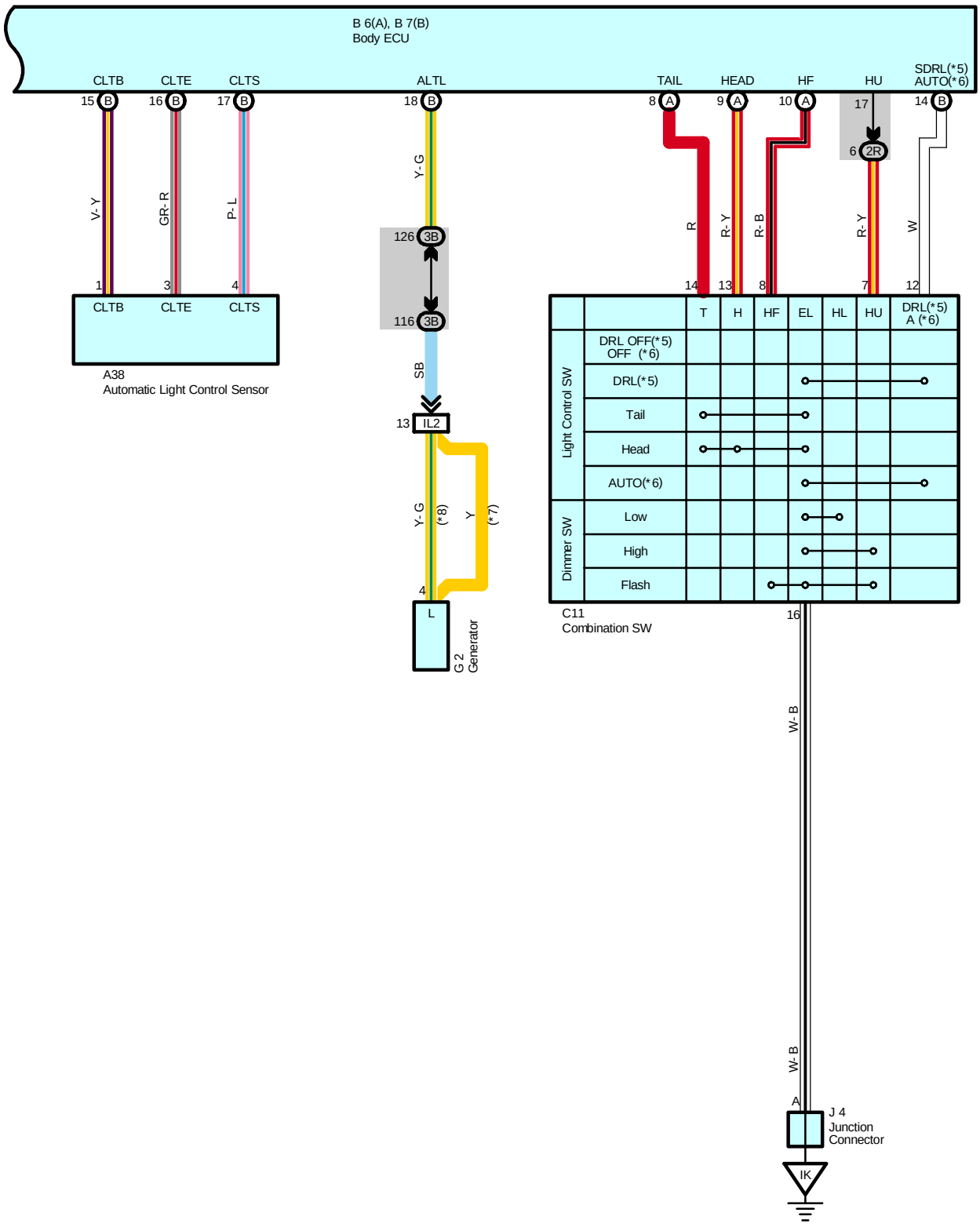

## System Outline

**Daytime Running Light Operation**

When the engine is started, a signal from the generator is input into TERMINAL (B) 18 of the body ECU. At this time, if the parking brake pedal is depressed or parking brake lever is pulled (Parking brake SW ON), the body ECU is not activated, and the daytime running light system does not operate.

When the parking brake pedal or parking lever is released (Parking brake SW OFF), a signal is input into TERMINAL 18 of the body ECU. This activates the body ECU and the headlight turns on.

## Service Hints

**Body ECU**

9-Ground : Approx. 12 volts with the ignition SW at ON or ST position

12, 24-Ground : Always continuity

1-Ground : Always approx. 12 volts

**P3 Parking Brake SW**

1-Ground : Continuity with the parking brake pedal depressed (Pedal type)
Continuity with the parking brake lever pulled up (Lever type)

### : Parts Location

| Code | See Page | Code | See Page | Code | See Page |
|---|---|---|---|---|---|
| A38 | 40 | G2 | 36 (*1) | H4 | 36 (*1) |
| B6 A | 40 | | 38 (*2) | | 38 (*2) |
| B7 B | 40 | H1 | 36 (*1) | J4 | 41 |
| C7 A | 40 | | 38 (*2) | J22 A | 41 |
| C8 B | 40 | H2 | 36 (*1) | J23 B | 41 |
| C11 | 40 | | 38 (*2) | P3 | 41 |
| D16 | 36 (*1) | H3 | 36 (*1) | | |
| | 38 (*2) | | 38 (*2) | | |

### : Relay Blocks

| Code | See Page | Relay Blocks (Relay Block Location) |
|---|---|---|
| 1 | 22 | Engine Room R/B (Engine Compartment Left) |

### : Junction Block and Wire Harness Connector

| Code | See Page | Junction Block and Wire Harness (Connector Location) |
|---|---|---|
| 1C | 25 | Engine Room Main Wire and Engine Room J/B (Engine Compartment Left) |
| 1E | | |
| 1F | | |
| 1G | | |
| 1H | | |
| 2B | 28 | Instrument Panel Wire and Driver Side J/B (Lower Finish Panel) |
| 2F | 28 | Engine Room Main Wire and Driver Side J/B (Lower Finish Panel) |
| 2G | | |
| 2L | 29 | Instrument Panel Wire and Driver Side J/B (Lower Finish Panel) |
| 2R | | |
| 2S | | |
| 3A | 34 | Instrument Panel Wire and Passenger Side J/B (Instrument Panel Brace RH) |
| 3B | | |

### : Connector Joining Wire Harness and Wire Harness

| Code | See Page | Joining Wire Harness and Wire Harness (Connector Location) |
|---|---|---|
| IF2 | 50 | Engine Room Main Wire and Instrument Panel Wire (Right Side of Steering Column Tube) |
| IF3 | | |
| IL2 | 52 | Engine Wire and Instrument Panel Wire (Behind the Glove Box) |

* 1 : 1MZ-FE, 3MZ-FE * 2 : 2AZ-FE * 3 : w/ Power Seat * 4 : w/o Power Seat

# Headlight

 : **Ground Points**

| Code | See Page | Ground Points Location |
|---|---|---|
| EB | 46 (*1)<br>48 (*2) | Right Fender |
| EC | 46 (*1)<br>48 (*2) | Left Fender |
| II | 50 | Cowl Side Panel LH |
| IJ<br>IK | 50 | Instrument Panel Brace LH |

 : **Splice Points**

| Code | See Page | Wire Harness with Splice Points | Code | See Page | Wire Harness with Splice Points |
|---|---|---|---|---|---|
| E2 | 46 (*1) | Engine Room Main Wire | E2 | 48 (*2) | Engine Room Main Wire |

* 1 : 1MZ-FE, 3MZ-FE * 2 : 2AZ-FE * 3 : w/ Power Seat * 4 : w/o Power Seat

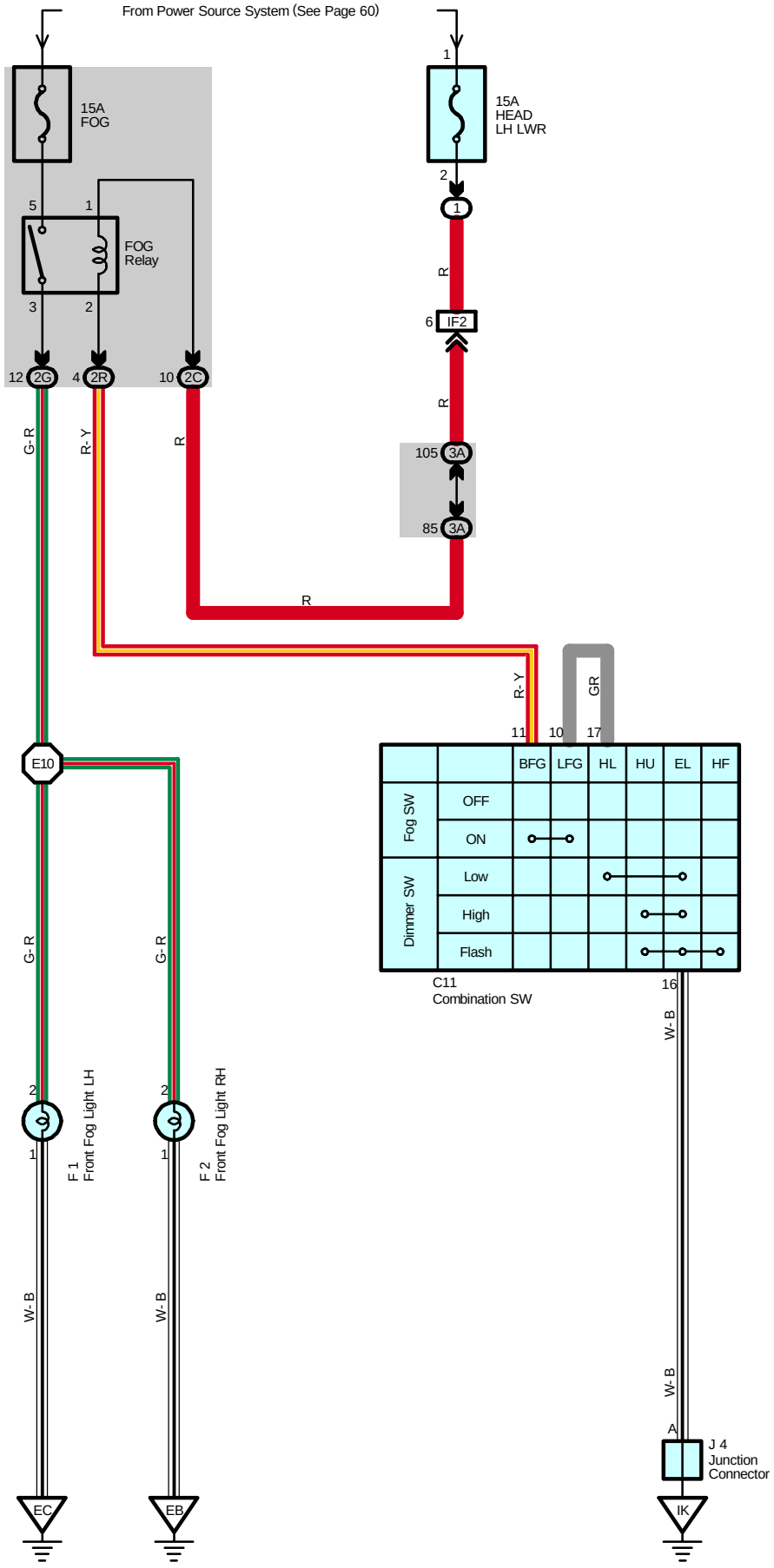
From Power Source System (See Page 60)
15A
FOG
5
1
FOG
Relay
3
2
12 2G
4 2R
10 2C
1
15A
HEAD
LH LWR
2
1
R
6 IF2
R
105 3A
85 3A
R
G-R
R-Y
R
R-Y
GR
11
10
17
E10
BFG
LFG
HL
HU
EL
HF
Fog SW
OFF
ON
Dimmer SW
Low
High
Flash
C11
Combination SW
16
W-B
G-R
G-R
2
1
F 1
Front Fog Light LH
2
1
F 2
Front Fog Light RH
W-B
W-B
W-B
A
J 4
Junction
Connector
EC
EB
IK

**Service Hints**

**FOG Relay**

5-3 : Closed with the light control SW at HEAD position, dimmer SW at LOW position and fog SW on

**: Parts Location**

| Code | See Page | Code | See Page | Code | See Page |
|---|---|---|---|---|---|
| C11 | 40 | F1 | 38 (*2) | F2 | 38 (*2) |
| F1 | 36 (*1) | F2 | 36 (*1) | J4 | 41 |

**: Relay Blocks**

| Code | See Page | Relay Blocks (Relay Block Location) |
|---|---|---|
| 1 | 22 | Engine Room R/B (Engine Compartment Left) |

**: Junction Block and Wire Harness Connector**

| Code | See Page | Junction Block and Wire Harness (Connector Location) |
|---|---|---|
| 2C | 28 | Instrument Panel Wire and Driver Side J/B (Lower Finish Panel) |
| 2G | 28 | Engine Room Main Wire and Driver Side J/B (Lower Finish Panel) |
| 2R | 29 | Instrument Panel Wire and Driver Side J/B (Lower Finish Panel) |
| 3A | 34 | Instrument Panel Wire and Passenger Side J/B (Instrument Panel Brace RH) |

**: Connector Joining Wire Harness and Wire Harness**

| Code | See Page | Joining Wire Harness and Wire Harness (Connector Location) |
|---|---|---|
| IF2 | 50 | Engine Room Main Wire and Instrument Panel Wire (Right Side of Steering Column Tube) |

**: Ground Points**

| Code | See Page | Ground Points Location |
|---|---|---|
| EB | 46 (*1)<br>48 (*2) | Right Fender |
| EC | 46 (*1)<br>48 (*2) | Left Fender |
| IK | 50 | Instrument Panel Brace LH |

**: Splice Points**

| Code | See Page | Wire Harness with Splice Points | Code | See Page | Wire Harness with Splice Points |
|---|---|---|---|---|---|
| E10 | 46 (*1) | Engine Room Main Wire | E10 | 48 (*2) | Engine Room Main Wire |

* 1 : 1MZ-FE, 3MZ-FE * 2 : 2AZ-FE * 3 : w/ Power Seat * 4 : w/o Power Seat

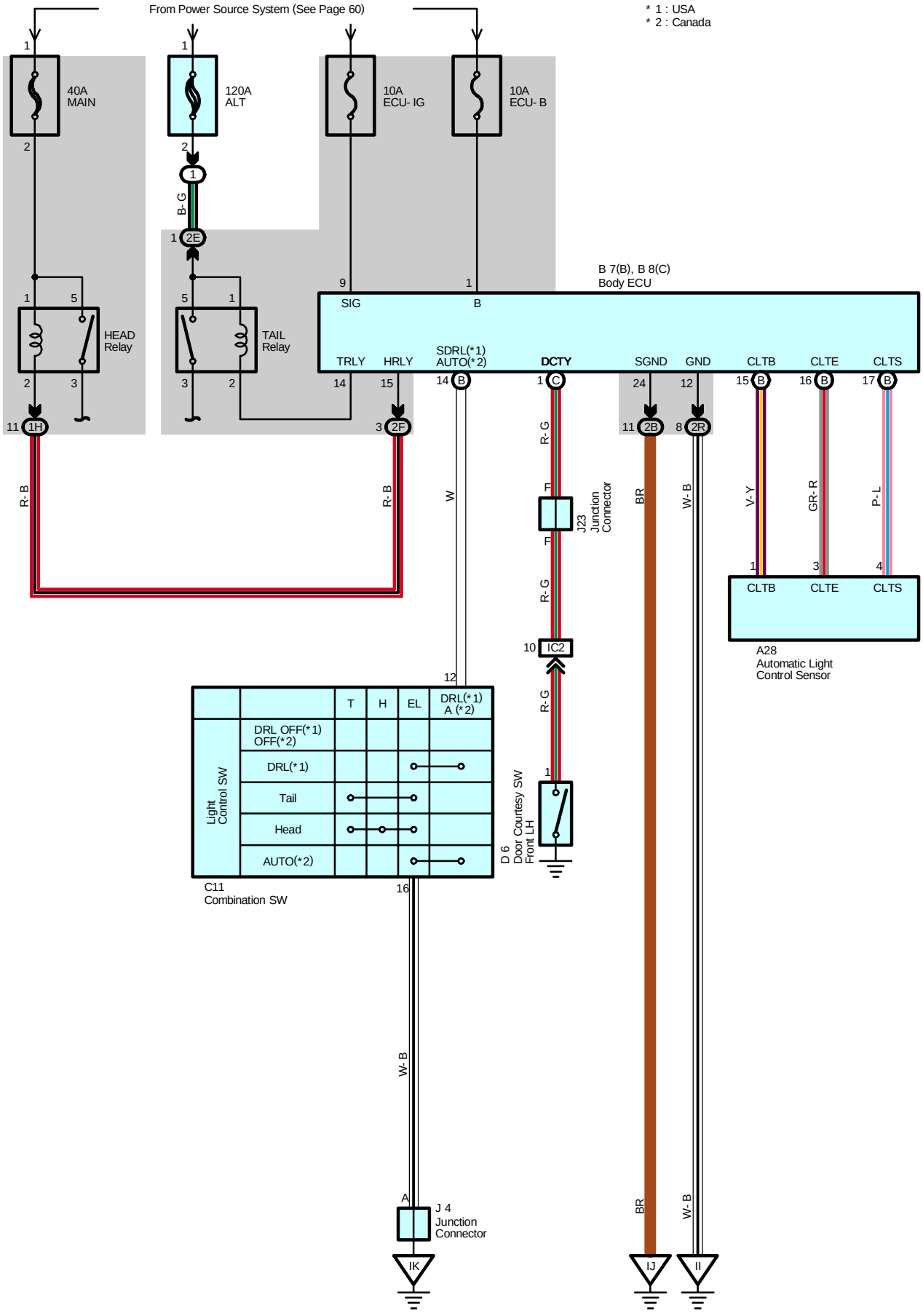
From Power Source System (See Page 60)
* 1 : USA
* 2 : Canada
40A MAIN
120A ALT
10A ECU- IG
10A ECU- B
B- G
HEAD Relay
TAIL Relay
B 7(B), B 8(C)
Body ECU
SIG
B
TRLY
HRLY
SDRL(*1) AUTO(*2)
DCTY
SGND
GND
CLTB
CLTE
CLTS
R- B
W
R- G
BR
W- B
V- Y
GR- R
P- L
J23 Junction Connector
A28 Automatic Light Control Sensor
IC2
C11 Combination SW
Light Control SW
DRL OFF(*1) OFF(*2)
DRL(*1)
Tail
Head
AUTO(*2)
T
H
EL
DRL(*1) A (*2)
D 6 Door Courtesy SW Front LH
J 4 Junction Connector
IK
IJ
II

## System Outline

The automatic light control system works when the light control SW is turned to AUTO. The automatic light control sensor detects the brightness around the vehicle. By this function, the system automatically turns the taillight and headlight on if the brightness is below the regular level and turns the taillight and headlight off when the surroundings become brighter than the regular level.

## Service Hints

**Body ECU**

9-Ground : Approx. 12 volts with the ignition SW at ON or ST position
12, 24-Ground : Always continuity
1-Ground : Always approx. 12 volts

**D6 Door Courtesy SW Front LH**

1-Ground : Continuity with the driver's door open

### : Parts Location

| Code | | See Page | Code | See Page | Code | See Page |
|---|---|---|---|---|---|---|
| A28 | | 40 | C11 | 40 | J23 | 41 |
| B7 | B | 40 | D6 | 42 | | |
| B8 | C | 40 | J4 | 41 | | |

### : Relay Blocks

| Code | See Page | Relay Blocks (Relay Block Location) |
|---|---|---|
| 1 | 22 | Engine Room R/B (Engine Compartment Left) |

### : Junction Block and Wire Harness Connector

| Code | See Page | Junction Block and Wire Harness (Connector Location) |
|---|---|---|
| 1H | 25 | Engine Room Main Wire and Engine Room J/B (Engine Compartment Left) |
| 2B | 28 | Instrument Panel Wire and Driver Side J/B (Lower Finish Panel) |
| 2E | 28 | Engine Room Main Wire and Driver Side J/B (Lower Finish Panel) |
| 2F | | |
| 2R | 29 | Instrument Panel Wire and Driver Side J/B (Lower Finish Panel) |

### : Connector Joining Wire Harness and Wire Harness

| Code | See Page | Joining Wire Harness and Wire Harness (Connector Location) |
|---|---|---|
| IC2 | 50 | Instrument Panel Wire and Floor Wire (Left Kick Panel) |

### : Ground Points

| Code | See Page | Ground Points Location |
|---|---|---|
| II | 50 | Cowl Side Panel LH |
| IJ | 50 | Instrument Panel Brace LH |
| IK | | |

# Light Auto Turn Off System

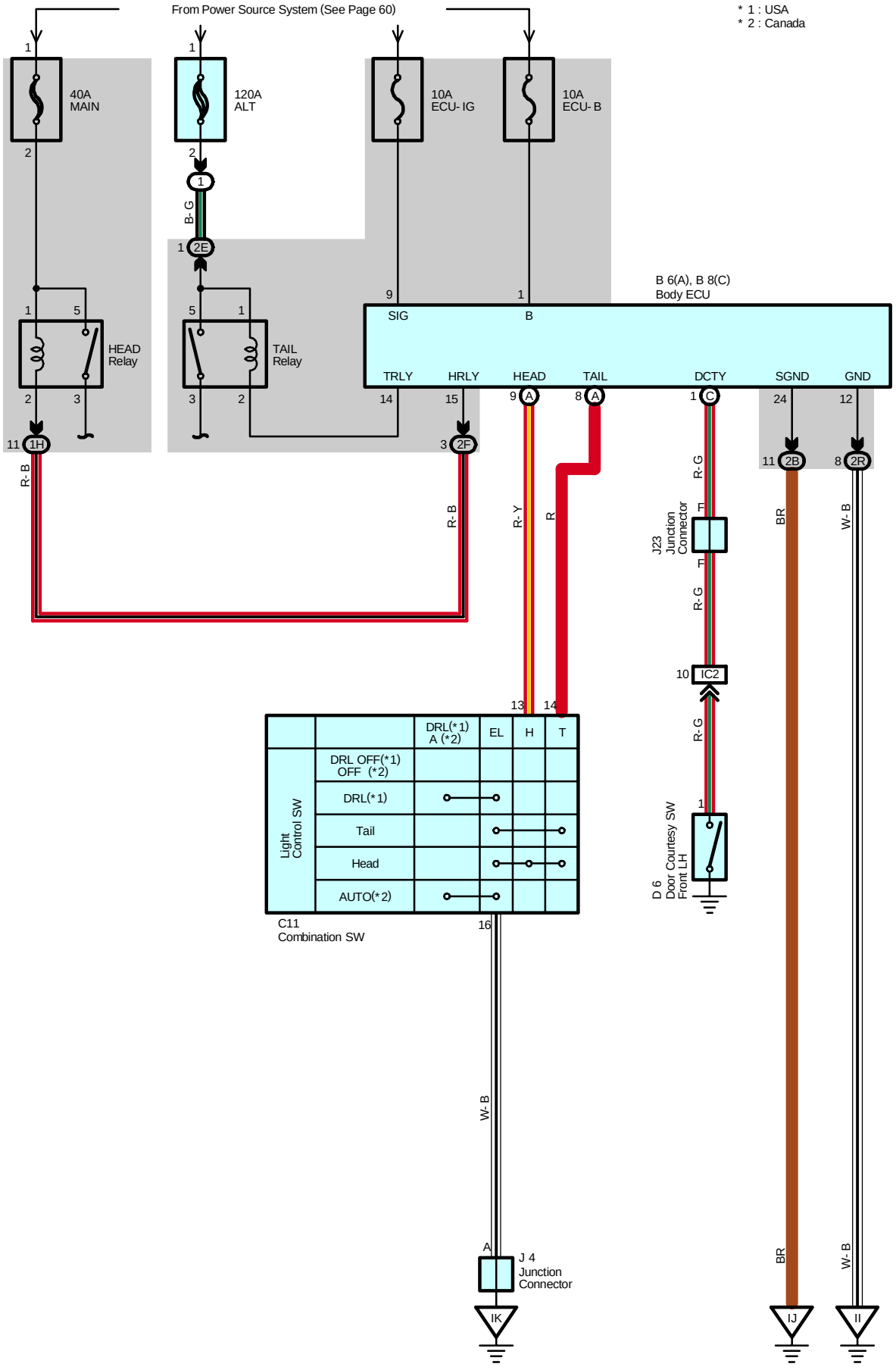

## System Outline

### 1. Normal Lighting Operation

<Turn taillight on>
With the light control SW turned to TAIL position, a signal is input into TERMINAL (A) 8 of the body ECU. Due to this signal, the current flowing to TERMINAL 14 of the ECU flows to TERMINAL (A) 8 to TERMINAL 14 of the light control SW to TERMINAL 16 to GROUND, and TAIL relay causes taillights to turn on.

<Turn headlight on>
With the light control SW turned to HEAD position, a signal is input into TERMINALS (A) 8 and (A) 9 of the body ECU. Due to this signal, the current flowing to TERMINAL 15 of the ECU flows to TERMINAL (A) 9 to TERMINAL 13 of the light control SW to TERMINAL 16 to GROUND in the headlight circuit, and causes taillight and HEAD relay to turn the lights on. The taillight circuit is same as above.

### 2. Light Auto Turn Off Operation

With light on and ignition SW turned off (Input signal goes to TERMINAL 9 of the ECU), when the driver's door is opened (Input signal goes to TERMINAL (C) 1 of the ECU), the body ECU operates and the current is cut off which flows from TERMINAL 14 of the ECU to TERMINAL (A) 8 In taillight circuit and from TERMINAL 15 to TERMINAL (A) 9 in headlight circuit.
As a result, all lights are turned off automatically.

## Service Hints

**TAIL Relay**

5-3 : Closed with the light control SW at HEAD or TAIL position

**HEAD Relay**

5-3 : Closed with the light control SW at HEAD position or dimmer SW at FLASH position
Closed with the engine running and parking brake released (Parking brake SW off)

**Body ECU**

9-Ground : Approx. 12 volts with the ignition SW at ON or ST position
12, 24-Ground : Always continuity
1-Ground : Always approx. 12 volts

**D6 Door Courtesy SW Front LH**

1-Ground : Closed with the driver door open

**: Parts Location**

| Code | | See Page | Code | See Page | Code | See Page |
|---|---|---|---|---|---|---|
| B6 | A | 40 | C11 | 40 | J4 | 41 |
| B8 | C | 40 | D6 | 42 | J23 | 41 |

**: Relay Blocks**

| Code | See Page | Relay Blocks (Relay Block Location) |
|---|---|---|
| 1 | 22 | Engine Room R/B (Engine Compartment Left) |

**: Junction Block and Wire Harness Connector**

| Code | See Page | Junction Block and Wire Harness (Connector Location) |
|---|---|---|
| 1H | 25 | Engine Room Main Wire and Engine Room J/B (Engine Compartment Left) |
| 2B | 28 | Instrument Panel Wire and Driver Side J/B (Lower Finish Panel) |
| 2E | 28 | Engine Room Main Wire and Driver Side J/B (Lower Finish Panel) |
| 2F | | |
| 2R | 29 | Instrument Panel Wire and Driver Side J/B (Lower Finish Panel) |

**: Connector Joining Wire Harness and Wire Harness**

| Code | See Page | Joining Wire Harness and Wire Harness (Connector Location) |
|---|---|---|
| IC2 | 50 | Instrument Panel Wire and Floor Wire (Left Kick Panel) |

▽ : **Ground Points**

| Code | See Page | Ground Points Location |
|---|---|---|
| II | 50 | Cowl Side Panel LH |
| IJ | 50 | Instrument Panel Brace LH |
| IK | | |

# Interior Light

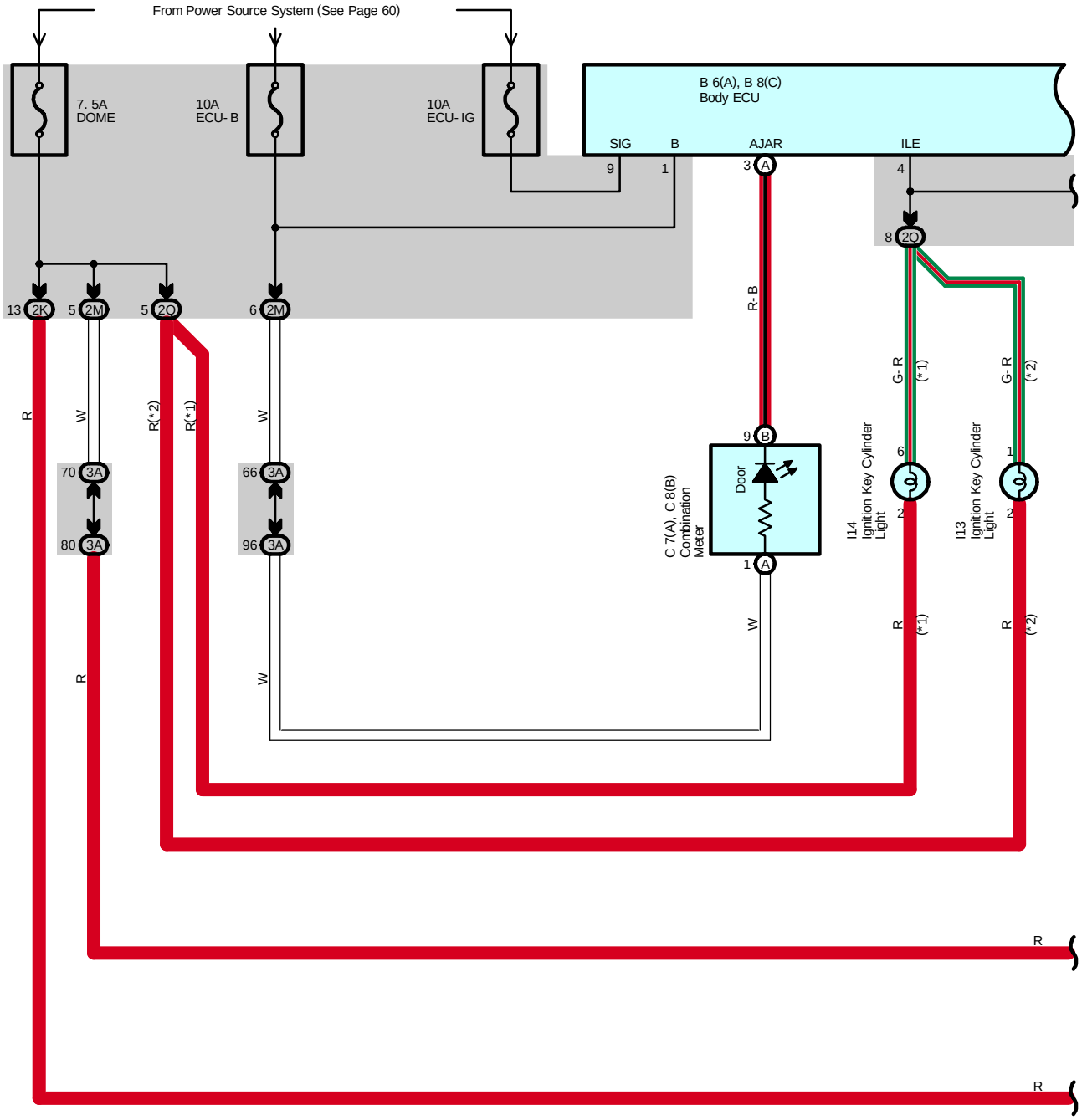

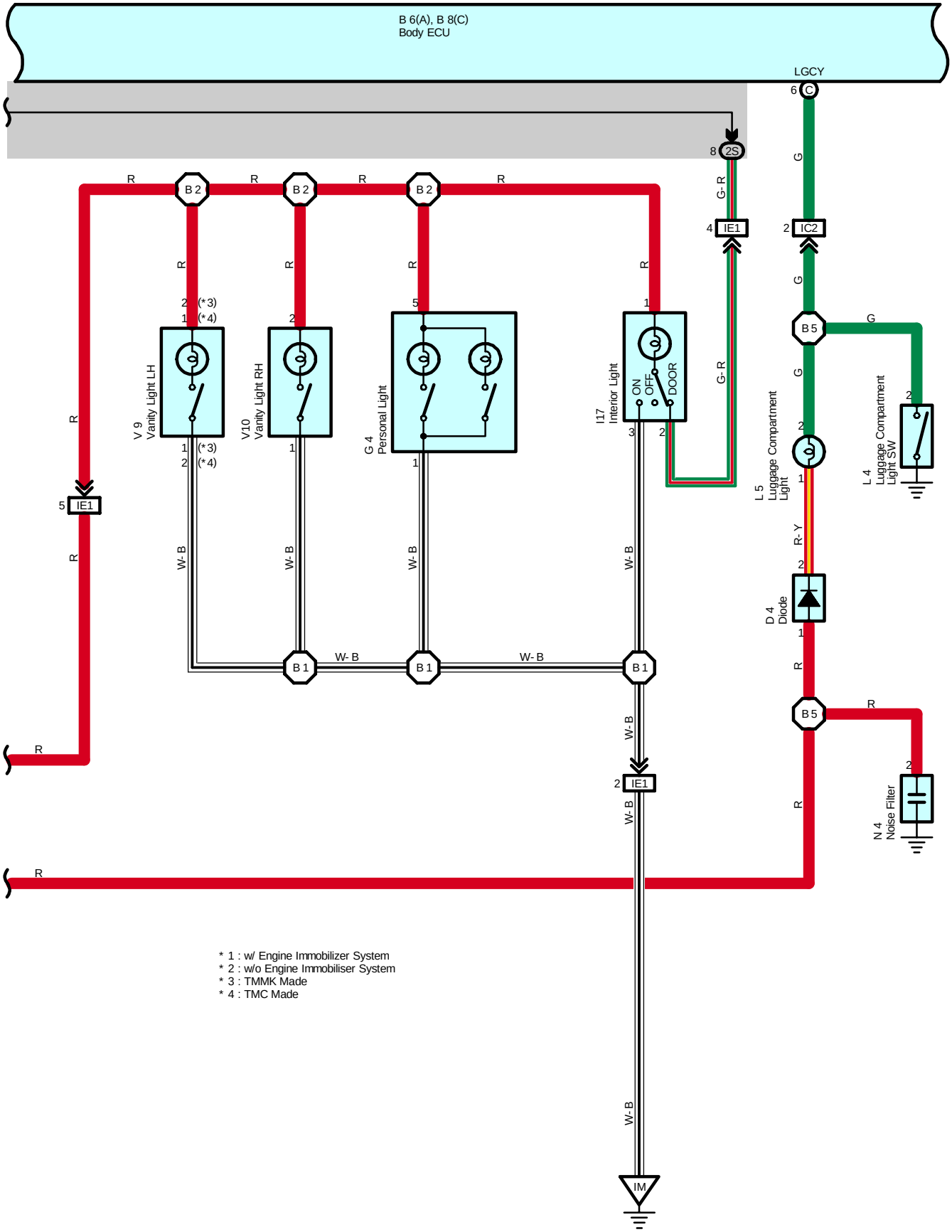


* 1 : w/ Engine Immobilizer System
* 2 : w/o Engine Immobiliser System
* 3 : TMMK Made
* 4 : TMC Made

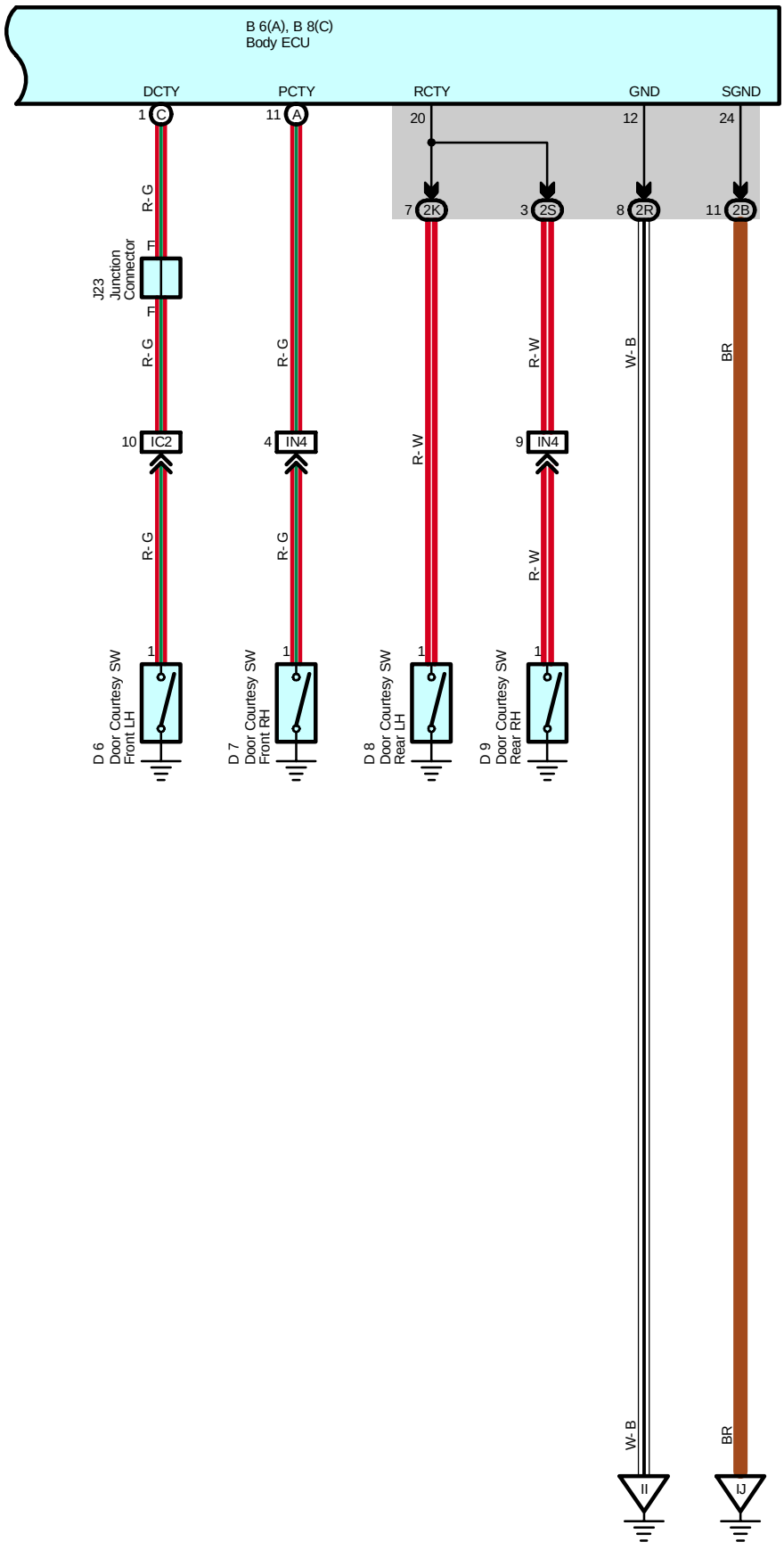
B 6(A), B 8(C)
Body ECU
DCTY
PCTY
RCTY
GND
SGND
1 C
11 A
20
12
24
7 2K
3 2S
8 2R
11 2B
R- G
J23
Junction
Connector
F
F
R- G
R- G
R- W
W- B
BR
10 IC2
4 IN4
9 IN4
R- W
R- G
R- G
R- W
D 6
Door Courtesy SW
Front LH
D 7
Door Courtesy SW
Front RH
D 8
Door Courtesy SW
Rear LH
D 9
Door Courtesy SW
Rear RH
W- B
BR
II
IJ

**Service Hints**

**Body ECU**

9-Ground : Approx. 12 volts with the ignition SW at ON or ST position
12, 24-Ground : Always continuity
1-Ground : Always approx. 12 volts

**D6, D7, D8, D9 Door Courtesy SW Front LH, RH, Rear LH, RH**

1-Ground : Closed with each of the door open

**: Parts Location**

| Code | | See Page | Code | See Page | Code | See Page |
|---|---|---|---|---|---|---|
| B6 | A | 40 | D8 | 42 | L4 | 43 |
| B8 | C | 40 | D9 | 42 | L5 | 43 |
| C7 | A | 40 | G4 | 42 | N4 | 43 |
| C8 | B | 40 | I13 | 41 | V9 | 43 |
| D4 | | 42 | I14 | 41 | V10 | 43 |
| D6 | | 42 | I17 | 42 | | |
| D7 | | 42 | J23 | 41 | | |

**: Junction Block and Wire Harness Connector**

| Code | See Page | Junction Block and Wire Harness (Connector Location) |
|---|---|---|
| 2B | 28 | Instrument Panel Wire and Driver Side J/B (Lower Finish Panel) |
| 2K | 28 | Floor Wire and Driver Side J/B (Lower Finish Panel) |
| 2M | 29 | Instrument Panel Wire and Driver Side J/B (Lower Finish Panel) |
| 2Q | | |
| 2R | | |
| 2S | | |
| 3A | 34 | Instrument Panel Wire and Passenger Side J/B (Instrument Panel Brace RH) |

**: Connector Joining Wire Harness and Wire Harness**

| Code | See Page | Joining Wire Harness and Wire Harness (Connector Location) |
|---|---|---|
| IC2 | 50 | Instrument Panel Wire and Floor Wire (Left Kick Panel) |
| IE1 | 50 | Instrument Panel Wire and Roof Wire (Inside of Front Left Pillar) |
| IN4 | 52 | Instrument Panel Wire and Floor No.2 Wire (Right Kick Panel) |

**: Ground Points**

| Code | See Page | Ground Points Location |
|---|---|---|
| II | 50 | Cowl Side Panel LH |
| IJ | 50 | Instrument Panel Brace LH |
| IM | 50 | Instrument Panel Reinforcement RH |

**: Splice Points**

| Code | See Page | Wire Harness with Splice Points | Code | See Page | Wire Harness with Splice Points |
|---|---|---|---|---|---|
| B1 | 54 | Roof Wire | B5 | 54 | Floor Wire |
| B2 | | | | | |

* 1 : 1MZ-FE, 3MZ-FE * 2 : 2AZ-FE * 3 : w/ Power Seat * 4 : w/o Power Seat

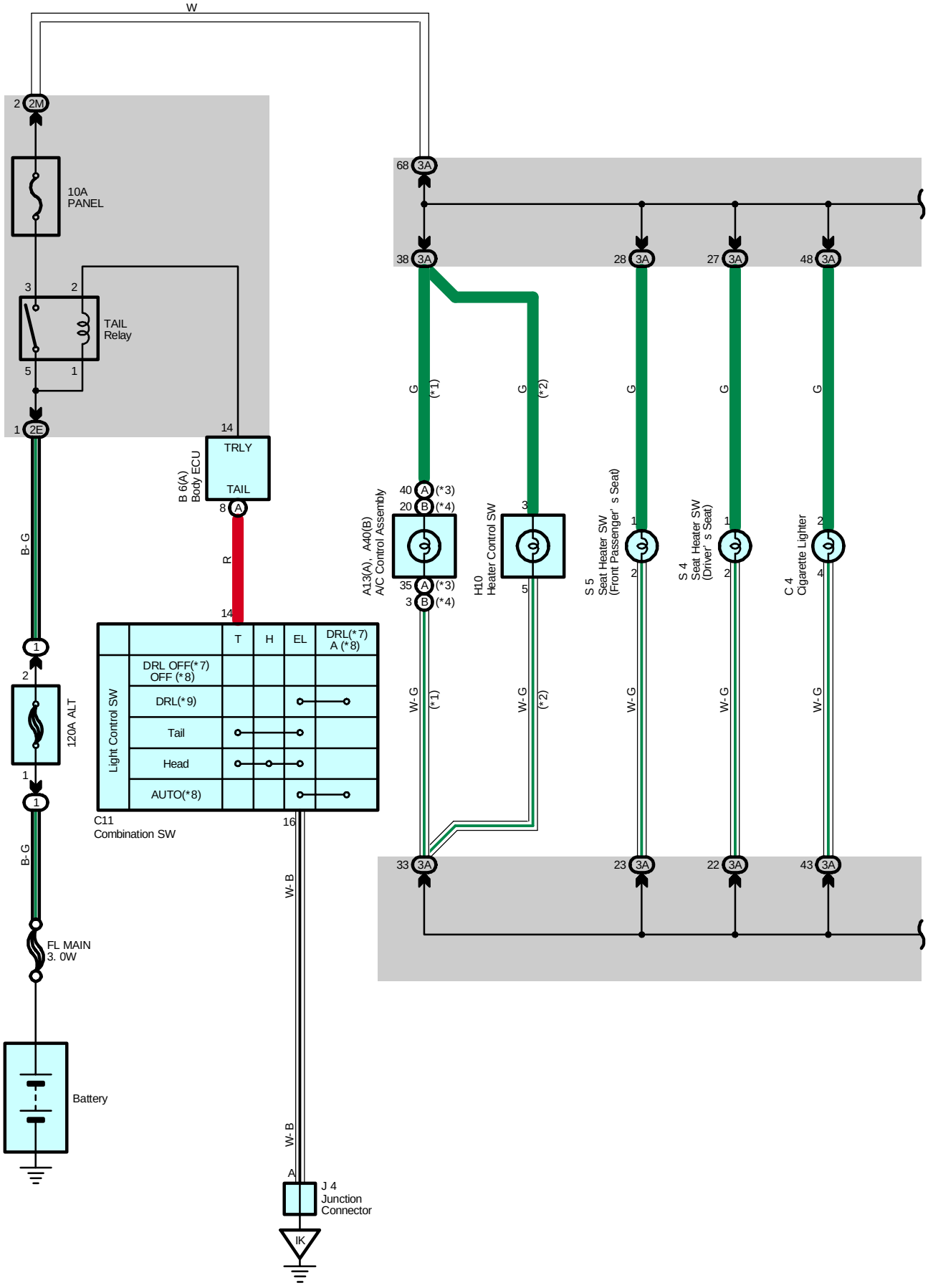
W
2 2M
10A
PANEL
3 2
TAIL
Relay
5 1
1 2E
14
TRLY
TAIL
B 6(A)
Body ECU
8 A
B-G
R
14
1
2
120A ALT
1
1
B-G
FL MAIN
3. 0W
Battery
T
H
EL
DRL(*7)
A (*8)
Light Control SW
DRL OFF(*7)
OFF (*8)
DRL(*9)
Tail
Head
AUTO(*8)
C11
Combination SW
16
W-B
W-B
A
J 4
Junction
Connector
IK
68 3A
38 3A
28 3A
27 3A
48 3A
G
(*1)
G
(*2)
G
G
G
40 A (*3)
20 B (*4)
35 A (*3)
3 B (*4)
A13(A), A40(B)
A/C Control Assembly
H10
Heater Control SW
S 5
Seat Heater SW
(Front Passenger' s Seat)
S 4
Seat Heater SW
(Driver' s Seat)
C 4
Cigarette Lighter
W-G
(*1)
W-G
(*2)
W-G
W-G
W-G
33 3A
23 3A
22 3A
43 3A

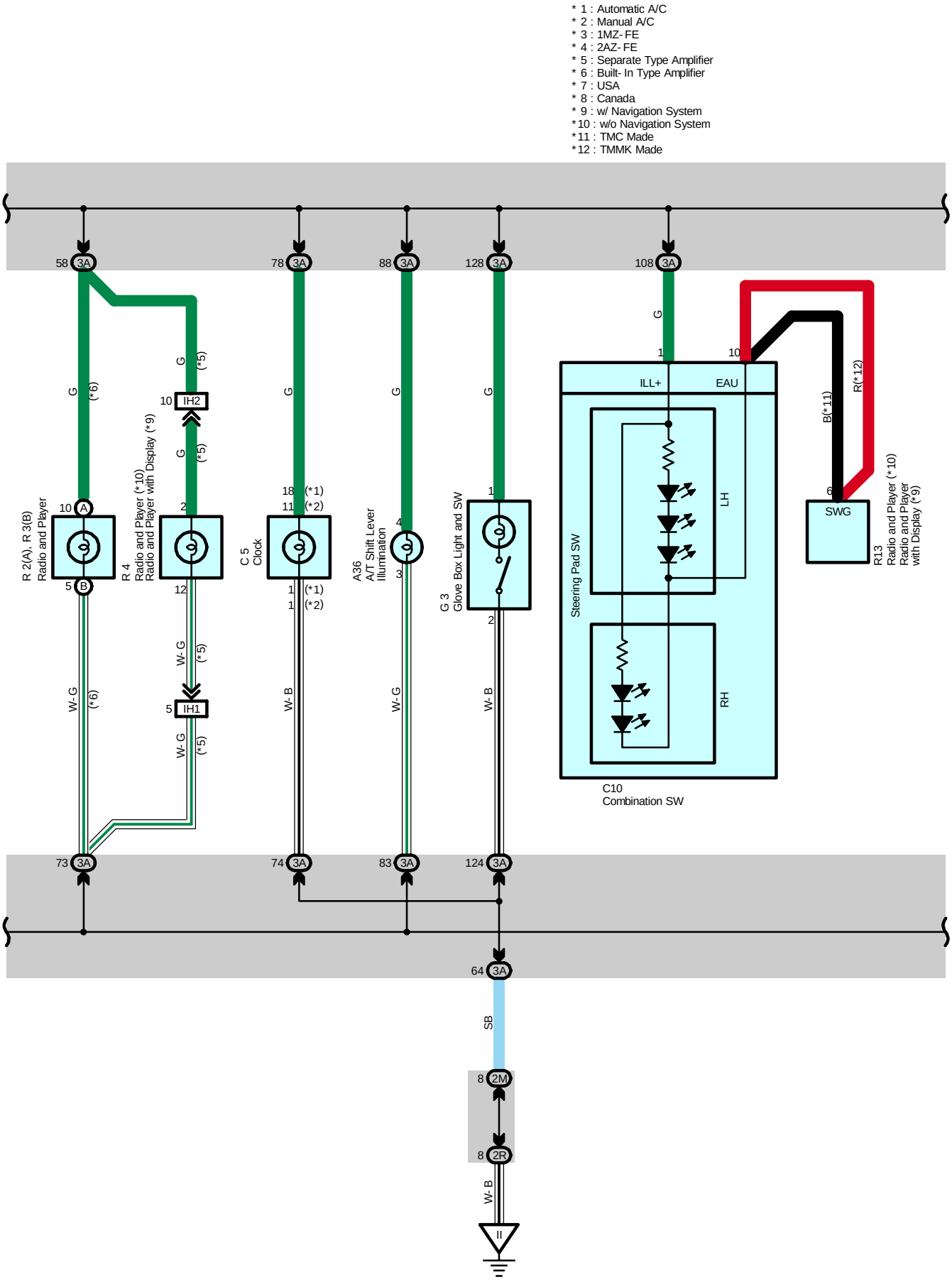
* 1 : Automatic A/C
* 2 : Manual A/C
* 3 : 1MZ- FE
* 4 : 2AZ- FE
* 5 : Separate Type Amplifier
* 6 : Built- In Type Amplifier
* 7 : USA
* 8 : Canada
* 9 : w/ Navigation System
*10 : w/o Navigation System
*11 : TMC Made
*12 : TMMK Made
58 3A
78 3A
88 3A
128 3A
108 3A
G
(*6)
(*5)
10 IH2
W- G
5 IH1
R 2(A), R 3(B)
Radio and Player
R 4
Radio and Player (*10)
Radio and Player with Display (*9)
C 5
Clock
A36
A/T Shift Lever Illumination
G 3
Glove Box Light and SW
W- B
(*1)
(*2)
ILL+
EAU
LH
RH
Steering Pad SW
C10
Combination SW
B(*11)
R(*12)
SWG
R13
Radio and Player (*10)
Radio and Player with Display (*9)
73 3A
74 3A
83 3A
124 3A
64 3A
SB
8 2M
8 2R
II

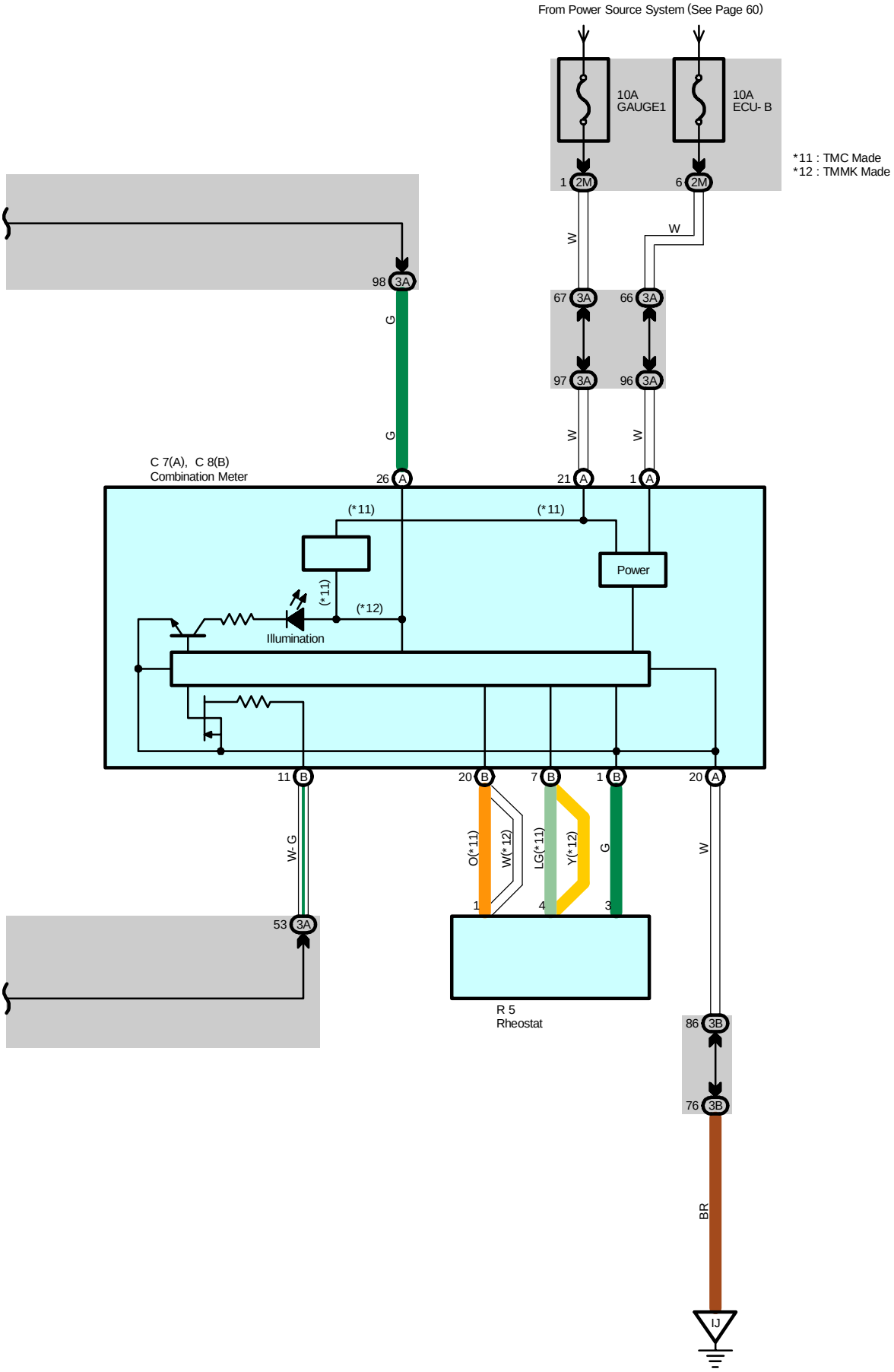
From Power Source System (See Page 60)
10A
GAUGE1
10A
ECU- B
*11 : TMC Made
*12 : TMMK Made
1 2M
6 2M
W
W
98 3A
67 3A
66 3A
97 3A
96 3A
G
G
W
W
C 7(A), C 8(B)
Combination Meter
26 A
21 A
1 A
(*11)
(*11)
Power
(*11)
(*12)
Illumination
11 B
20 B
7 B
1 B
20 A
W-G
O(*11)
W(*12)
LG(*11)
Y(*12)
G
W
1
4
3
53 3A
R 5
Rheostat
86 3B
76 3B
BR
IJ

**Service Hints**

**TAIL Relay**

5-3 : Closed with the light control SW at TAIL or HEAD position

**C11 Combination SW**

14-16 : Closed with the light control SW at TAIL or HEAD position

**: Parts Location**

| Code | See Page | Code | See Page | Code | See Page |
|---|---|---|---|---|---|
| A13 A | 40 | C8 B | 40 | R3 B | 41 |
| A36 | 40 | C10 | 40 | R4 | 41 |
| A40 B | 40 | C11 | 40 | R5 | 41 |
| B6 A | 40 | G3 | 41 | R13 | 41 |
| C4 | 40 | H10 | 41 | S4 | 41 |
| C5 | 40 | J4 | 41 | S5 | 41 |
| C7 A | 40 | R2 A | 41 | | |

**: Relay Blocks**

| Code | See Page | Relay Blocks (Relay Block Location) |
|---|---|---|
| 1 | 22 | Engine Room R/B (Engine Compartment Left) |

**: Junction Block and Wire Harness Connector**

| Code | See Page | Junction Block and Wire Harness (Connector Location) |
|---|---|---|
| 2E | 28 | Engine Room Main Wire and Driver Side J/B (Lower Finish Panel) |
| 2M | 29 | Instrument Panel Wire and Driver Side J/B (Lower Finish Panel) |
| 2R | | |
| 3A | 34 | Instrument Panel Wire and Passenger Side J/B (Instrument Panel Brace RH) |
| 3B | | |

**: Connector Joining Wire Harness and Wire Harness**

| Code | See Page | Joining Wire Harness and Wire Harness (Connector Location) |
|---|---|---|
| IH1 | 50 | Instrument Panel Wire and Instrument Panel No.2 Wire (Instrument Panel Brace RH) |
| IH2 | | |

**: Ground Points**

| Code | See Page | Ground Points Location |
|---|---|---|
| II | 50 | Cowl Side Panel LH |
| IJ | 50 | Instrument Panel Brace LH |
| IK | | |

* 1 : 1MZ-FE, 3MZ-FE * 2 : 2AZ-FE * 3 : w/ Power Seat * 4 : w/o Power Seat

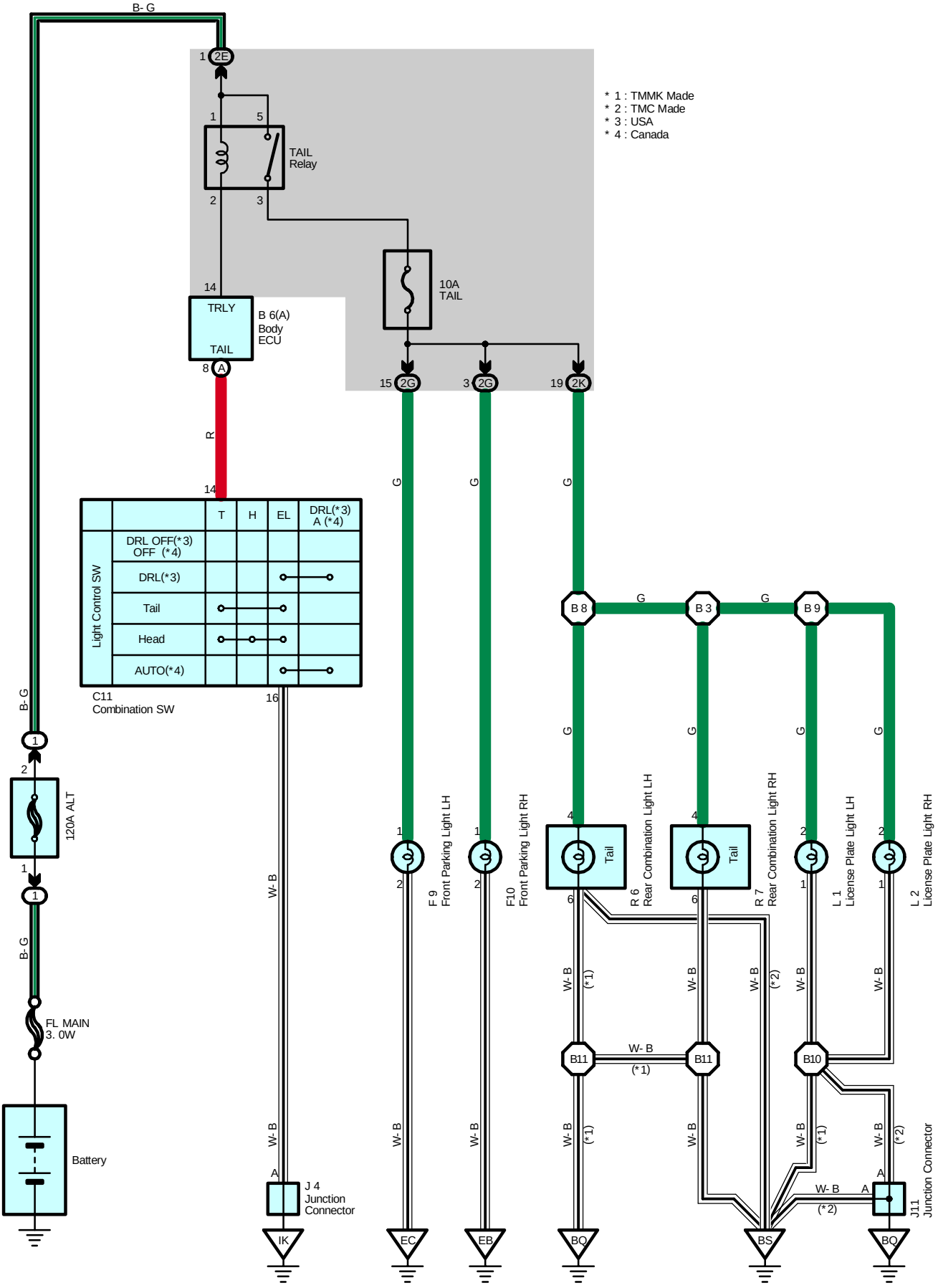
B- G
1 2E
1 5
TAIL Relay
2 3
14
TRLY
TAIL
B 6(A) Body ECU
8 A
R
14
10A TAIL
15 2G
3 2G
19 2K
* 1 : TMMK Made
* 2 : TMC Made
* 3 : USA
* 4 : Canada
T H EL DRL(*3) A (*4)
Light Control SW
DRL OFF(*3) OFF (*4)
DRL(*3)
Tail
Head
AUTO(*4)
C11 Combination SW
16
G
B 8
B 3
B 9
W- B
W- B (*1)
W- B (*2)
B11
B10
F 9 Front Parking Light LH
F10 Front Parking Light RH
R 6 Rear Combination Light LH
R 7 Rear Combination Light RH
L 1 License Plate Light LH
L 2 License Plate Light RH
Tail
J 4 Junction Connector
J11 Junction Connector
120A ALT
FL MAIN 3. 0W
Battery
EC
EB
BQ
BS
IK

**Service Hints**

**TAIL Relay**

5-3 : Closed with the light control SW at TAIL or HEAD position

**C11 Combination SW**

14-16 : Closed with the light control SW at TAIL or HEAD position

**: Parts Location**

| Code | See Page | Code | See Page | Code | See Page |
|---|---|---|---|---|---|
| B6 A | 40 | F10 | 36 (*1) | L1 | 43 |
| C11 | 40 | | 38 (*2) | L2 | 43 |
| F9 | 36 (*1) | J4 | 41 | R6 | 43 |
| | 38 (*2) | J11 | 42 | R7 | 43 |

**: Relay Blocks**

| Code | See Page | Relay Blocks (Relay Block Location) |
|---|---|---|
| 1 | 22 | Engine Room R/B (Engine Compartment Left) |

**: Junction Block and Wire Harness Connector**

| Code | See Page | Junction Block and Wire Harness (Connector Location) |
|---|---|---|
| 2E | 28 | Engine Room Main Wire and Driver Side J/B (Lower Finish Panel) |
| 2G | | |
| 2K | 28 | Floor Wire and Driver Side J/B (Lower Finish Panel) |

**: Ground Points**

| Code | See Page | Ground Points Location |
|---|---|---|
| EB | 46 (*1) | Right Fender |
| | 48 (*2) | |
| EC | 46 (*1) | Left Fender |
| | 48 (*2) | |
| IK | 50 | Instrument Panel Brace LH |
| BQ | 54 | Front Side of Rear Quarter Wheel House LH |
| BS | 54 | Lower Back Panel Center |

**: Splice Points**

| Code | See Page | Wire Harness with Splice Points | Code | See Page | Wire Harness with Splice Points |
|---|---|---|---|---|---|
| B3 | 54 | Floor Wire | B10 | 54 | Floor Wire |
| B8 | | | B11 | | |
| B9 | | | | | |

* 1 : 1MZ-FE, 3MZ-FE * 2 : 2AZ-FE * 3 : w/ Power Seat * 4 : w/o Power Seat

# Stop Light

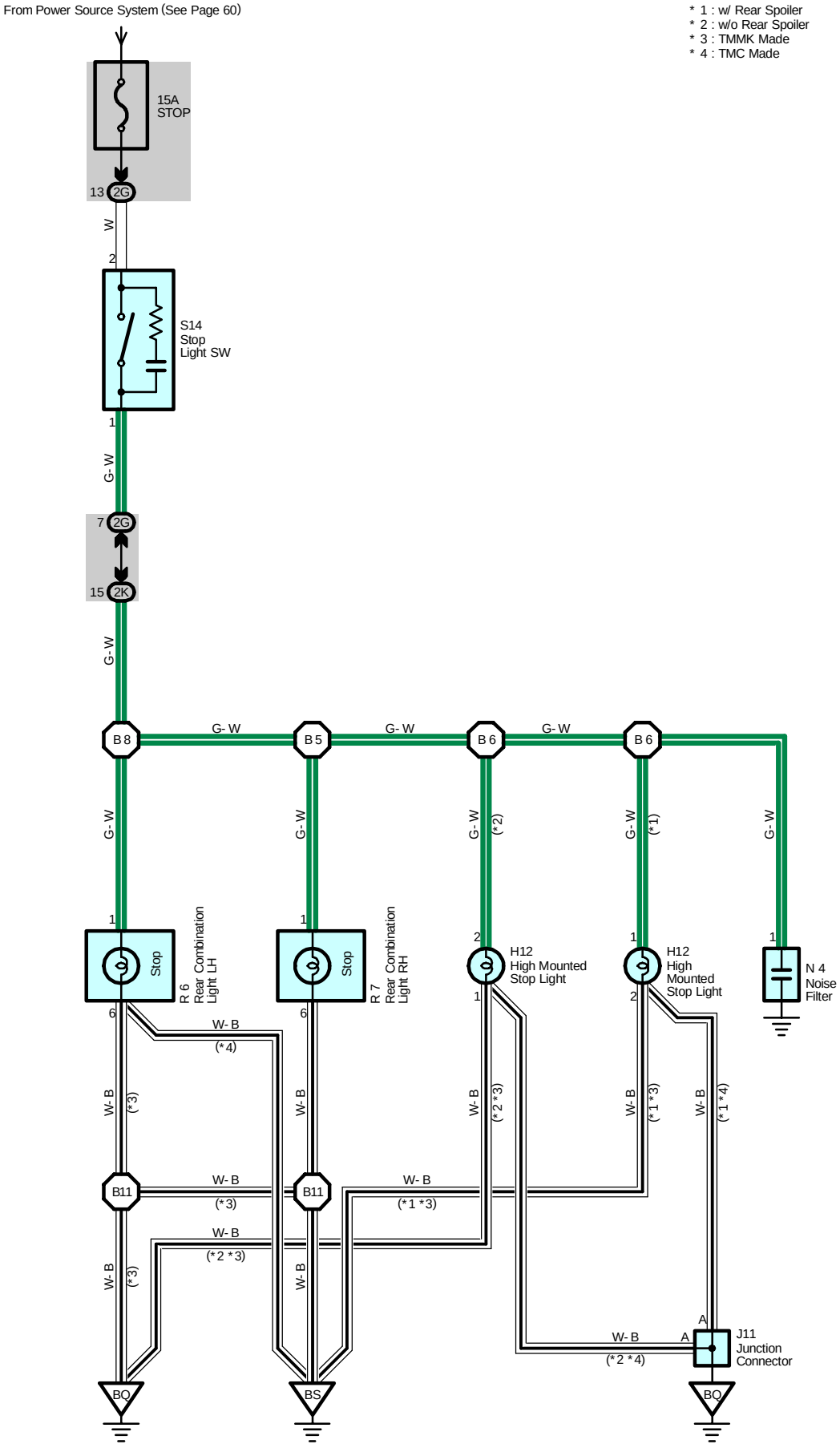
From Power Source System (See Page 60)
* 1 : w/ Rear Spoiler
* 2 : w/o Rear Spoiler
* 3 : TMMK Made
* 4 : TMC Made
15A
STOP
13 2G
W
2
S14
Stop
Light SW
1
G-W
7 2G
15 2K
G-W
B8
G-W
B5
G-W
B6
G-W
B6
G-W
G-W
G-W
(*2)
G-W
(*1)
G-W
1
Stop
R6
Rear Combination
Light LH
1
Stop
R7
Rear Combination
Light RH
2
H12
High Mounted
Stop Light
1
1
H12
High
Mounted
Stop Light
2
1
N4
Noise
Filter
6
6
W-B
(*4)
W-B
(*3)
W-B
(*3)
W-B
(*2*3)
W-B
(*1*3)
W-B
(*1*3)
W-B
(*1*4)
B11
B11
W-B
(*3)
W-B
(*1*3)
W-B
(*2*3)
W-B
(*3)
A
W-B
A
J11
Junction
Connector
(*2*4)
BQ
BS
BQ

**Service Hints**

**S14 Stop Light SW**

2-1 : Closed with the brake pedal depressed

**: Parts Location**

| Code | See Page | Code | See Page | Code | See Page |
|---|---|---|---|---|---|
| H12 | 42 | N4 | 43 | R7 | 43 |
| J11 | 42 | R6 | 43 | S14 | 41 |

**: Junction Block and Wire Harness Connector**

| Code | See Page | Junction Block and Wire Harness (Connector Location) |
|---|---|---|
| 2G | 28 | Engine Room Main Wire and Driver Side J/B (Lower Finish Panel) |
| 2K | 28 | Floor Wire and Driver Side J/B (Lower Finish Panel) |

**: Ground Points**

| Code | See Page | Ground Points Location |
|---|---|---|
| BQ | 54 | Front Side of Rear Quarter Wheel House LH |
| BS | 54 | Lower Back Panel Center |

**: Splice Points**

| Code | See Page | Wire Harness with Splice Points | Code | See Page | Wire Harness with Splice Points |
|---|---|---|---|---|---|
| B5 | 54 | Floor Wire | B8 | 54 | Floor Wire |
| B6 | | | B11 | | |

# Back-Up Light

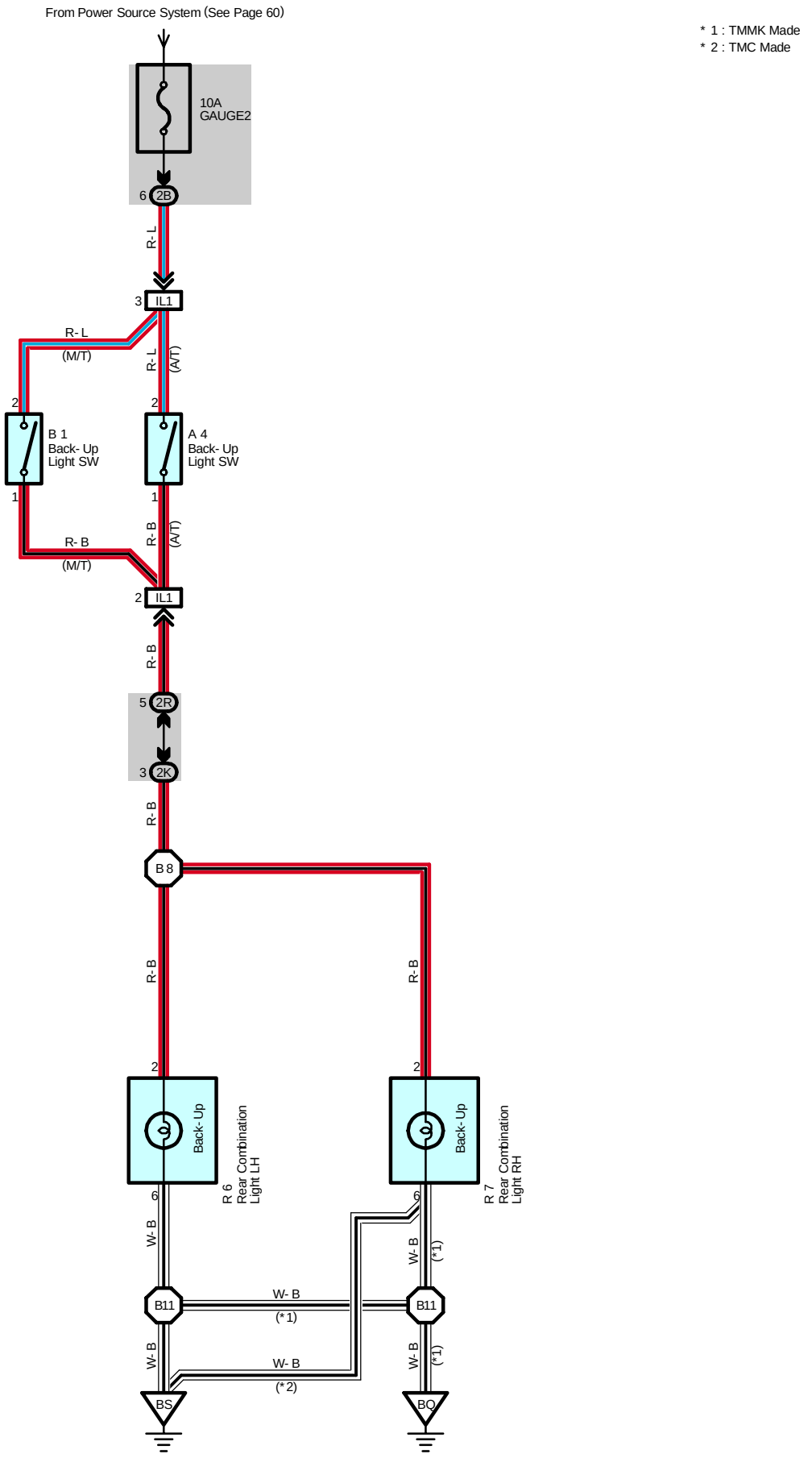

**Service Hints**

**B1 Back-Up Light SW (M/T)**

1-2 : Closed with the shift lever at R position

**A4 Back-Up Light SW (A/T)**

1-2 : Closed with the shift lever at R position

**: Parts Location**

| Code | See Page | Code | See Page | Code | See Page |
|---|---|---|---|---|---|
| A4 | 36 (*1) | B1 | 38 (*2) | R7 | 43 |
| | 38 (*2) | R6 | 43 | | |

**: Junction Block and Wire Harness Connector**

| Code | See Page | Junction Block and Wire Harness (Connector Location) |
|---|---|---|
| 2B | 28 | Instrument Panel Wire and Driver Side J/B (Lower Finish Panel) |
| 2K | 28 | Floor Wire and Driver Side J/B (Lower Finish Panel) |
| 2R | 29 | Instrument Panel Wire and Driver Side J/B (Lower Finish Panel) |

**: Connector Joining Wire Harness and Wire Harness**

| Code | See Page | Joining Wire Harness and Wire Harness (Connector Location) |
|---|---|---|
| IL1 | 52 | Engine Wire and Instrument Panel Wire (Behind the Glove Box) |

**: Ground Points**

| Code | See Page | Ground Points Location |
|---|---|---|
| BQ | 54 | Front Side of Rear Quarter Wheel House LH |
| BS | 54 | Lower Back Panel Center |

**: Splice Points**

| Code | See Page | Wire Harness with Splice Points | Code | See Page | Wire Harness with Splice Points |
|---|---|---|---|---|---|
| B8 | 54 | Floor Wire | B11 | 54 | Floor Wire |

* 1 : 1MZ-FE, 3MZ-FE * 2 : 2AZ-FE * 3 : w/ Power Seat * 4 : w/o Power Seat

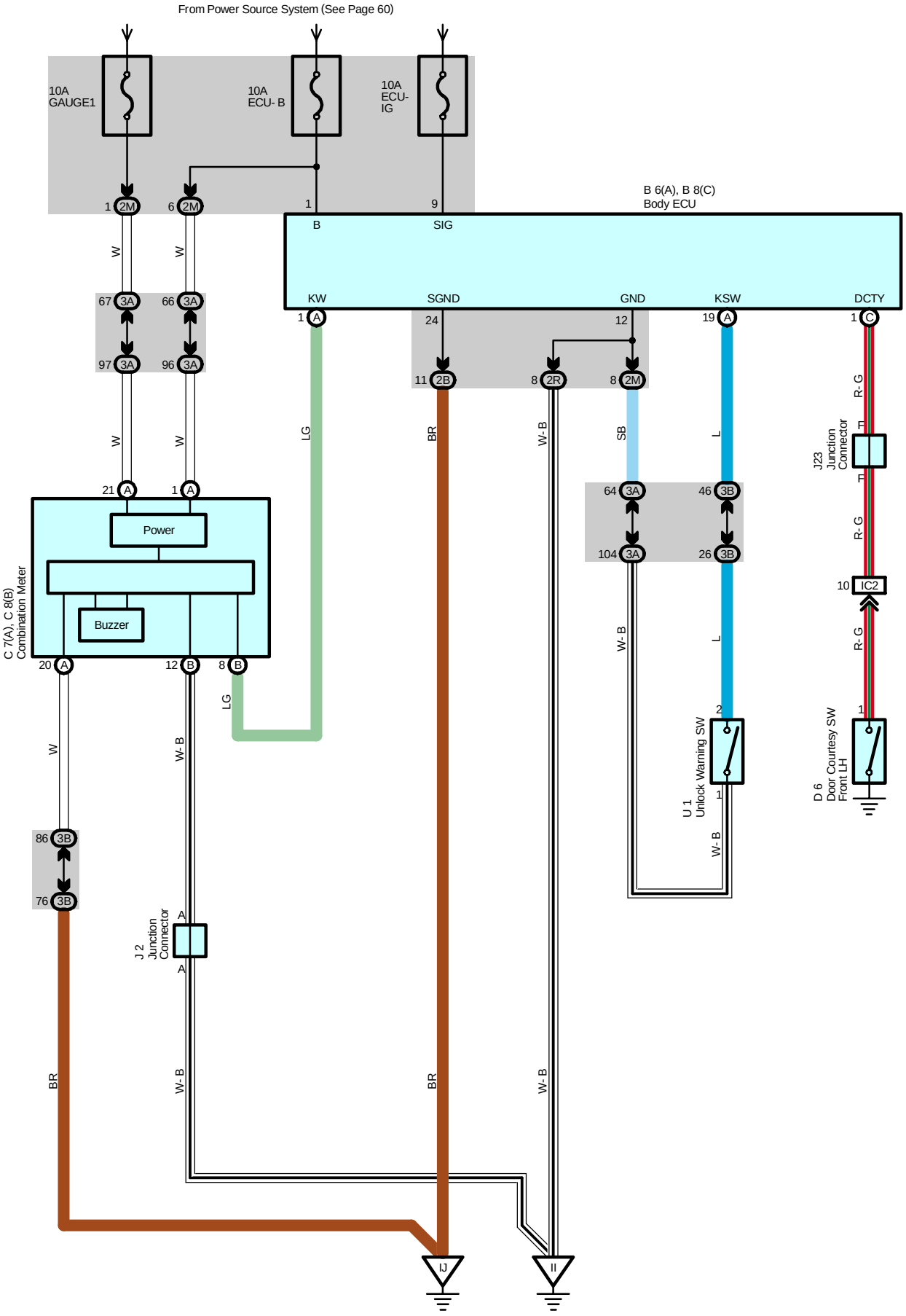
From Power Source System (See Page 60)
10A GAUGE1
10A ECU- B
10A ECU- IG
B 6(A), B 8(C) Body ECU
B
SIG
KW
SGND
GND
KSW
DCTY
Power
Buzzer
C 7(A), C 8(B) Combination Meter
J 2 Junction Connector
J23 Junction Connector
U 1 Unlock Warning SW
D 6 Door Courtesy SW Front LH
IC2
IJ
II

## System Outline

**Key Reminder System**

With the ignition key inserted in the key cylinder (Unlock warning SW on), the ignition SW still off and driver's door open (Door courtesy SW on), when a signal is input to TERMINAL (C) 1 of the body ECU, the body ECU operates, current flows from TERMINAL (A) 1 of the ECU to TERMINAL (B) 8 of the combination meter to GROUND and key reminder buzzer sounds.

## Service Hints

**Body ECU**

9-Ground : Approx. 12 volts with the ignition SW at ON or ST position
12, 24-Ground : Always continuity
1-Ground : Always approx. 12 volts

**D6 Door Courtesy SW Front LH**

1-Ground : Closed with the driver door open

**U1 Unlock Warning SW**

1-2 : Closed with the ignition key in cylinder

**: Parts Location**

| Code | | See Page | Code | | See Page | Code | See Page |
|---|---|---|---|---|---|---|---|
| B6 | A | 40 | C8 | B | 40 | J23 | 41 |
| B8 | C | 40 | D6 | | 42 | U1 | 41 |
| C7 | A | 40 | J2 | | 41 | | |

**: Junction Block and Wire Harness Connector**

| Code | See Page | Junction Block and Wire Harness (Connector Location) |
|---|---|---|
| 2B | 28 | Instrument Panel Wire and Driver Side J/B (Lower Finish Panel) |
| 2M | 29 | |
| 2R | | |
| 3A | 34 | Instrument Panel Wire and Passenger Side J/B (Instrument Panel Brace RH) |
| 3B | | |

**: Connector Joining Wire Harness and Wire Harness**

| Code | See Page | Joining Wire Harness and Wire Harness (Connector Location) |
|---|---|---|
| IC2 | 50 | Instrument Panel Wire and Floor Wire (Left Kick Panel) |

**: Ground Points**

| Code | See Page | Ground Points Location |
|---|---|---|
| II | 50 | Cowl Side Panel LH |
| IJ | 50 | Instrument Panel Brace LH |

* 1 : 1MZ-FE, 3MZ-FE * 2 : 2AZ-FE * 3 : w/ Power Seat * 4 : w/o Power Seat

# Theft Deterrent and Door Lock Control

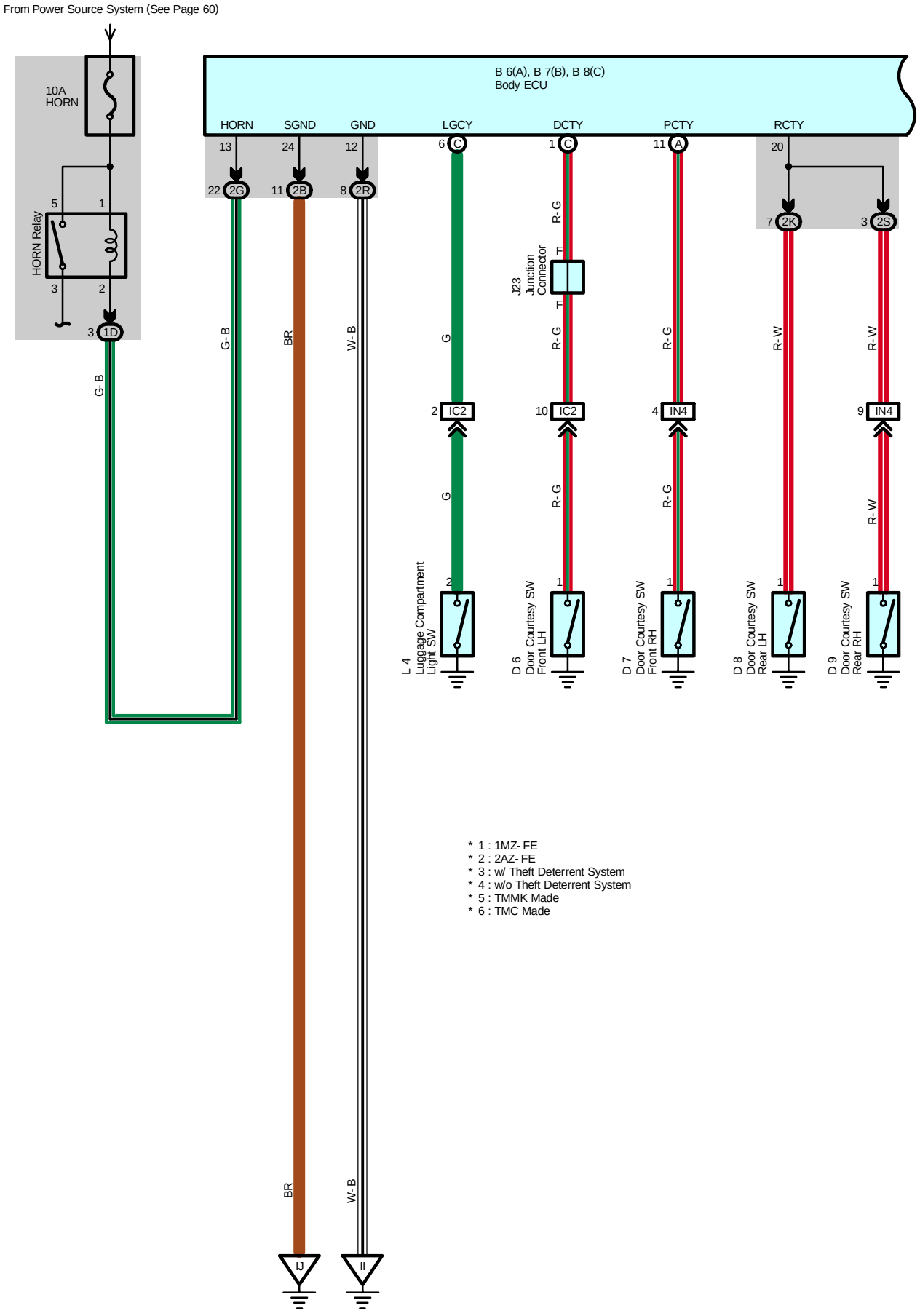

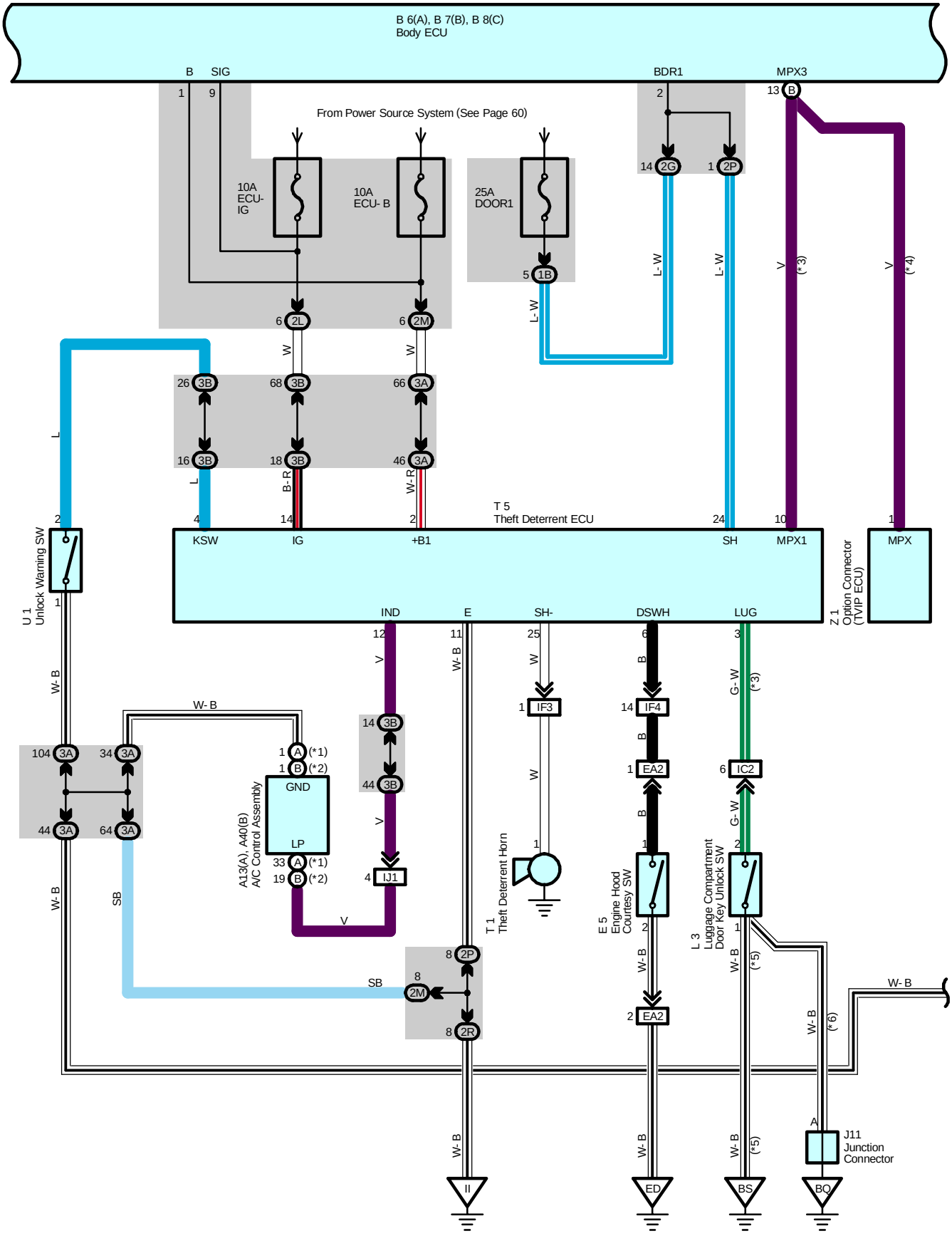
B 6(A), B 7(B), B 8(C)
Body ECU
B
SIG
BDR1
MPX3
From Power Source System (See Page 60)
10A ECU-IG
10A ECU- B
25A DOOR1
T 5
Theft Deterrent ECU
KSW
IG
+B1
SH
MPX1
MPX
U 1
Unlock Warning SW
Z 1
Option Connector (TVIP ECU)
IND
E
SH-
DSWH
LUG
GND
LP
A13(A), A40(B)
A/C Control Assembly
T 1
Theft Deterrent Horn
E 5
Engine Hood Courtesy SW
L 3
Luggage Compartment Door Key Unlock SW
J11
Junction Connector
II
ED
BS
BQ

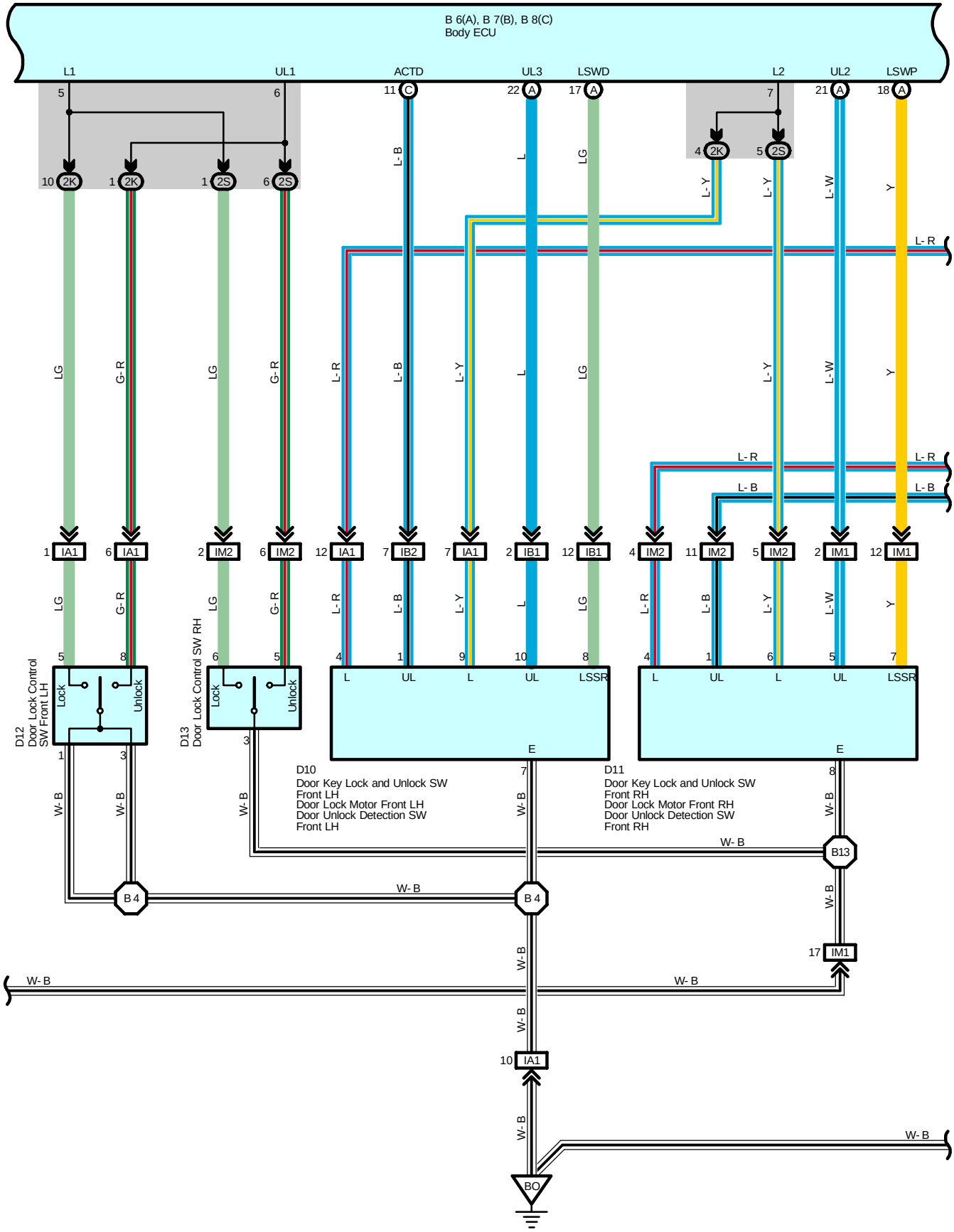
B 6(A), B 7(B), B 8(C)
Body ECU
L1
UL1
ACTD
UL3
LSWD
L2
UL2
LSWP
2K
2S
L- B
L
LG
L- Y
L- W
Y
L- R
G- R
W- B
IA1
IM2
IB2
IB1
IM1
D12
Door Lock Control SW Front LH
Lock
Unlock
D13
Door Lock Control SW RH
D10
Door Key Lock and Unlock SW Front LH
Door Lock Motor Front LH
Door Unlock Detection SW Front LH
D11
Door Key Lock and Unlock SW Front RH
Door Lock Motor Front RH
Door Unlock Detection SW Front RH
L
UL
LSSR
E
B 4
B13
BO

* 5 : TMMK Made
* 6 : TMC Made

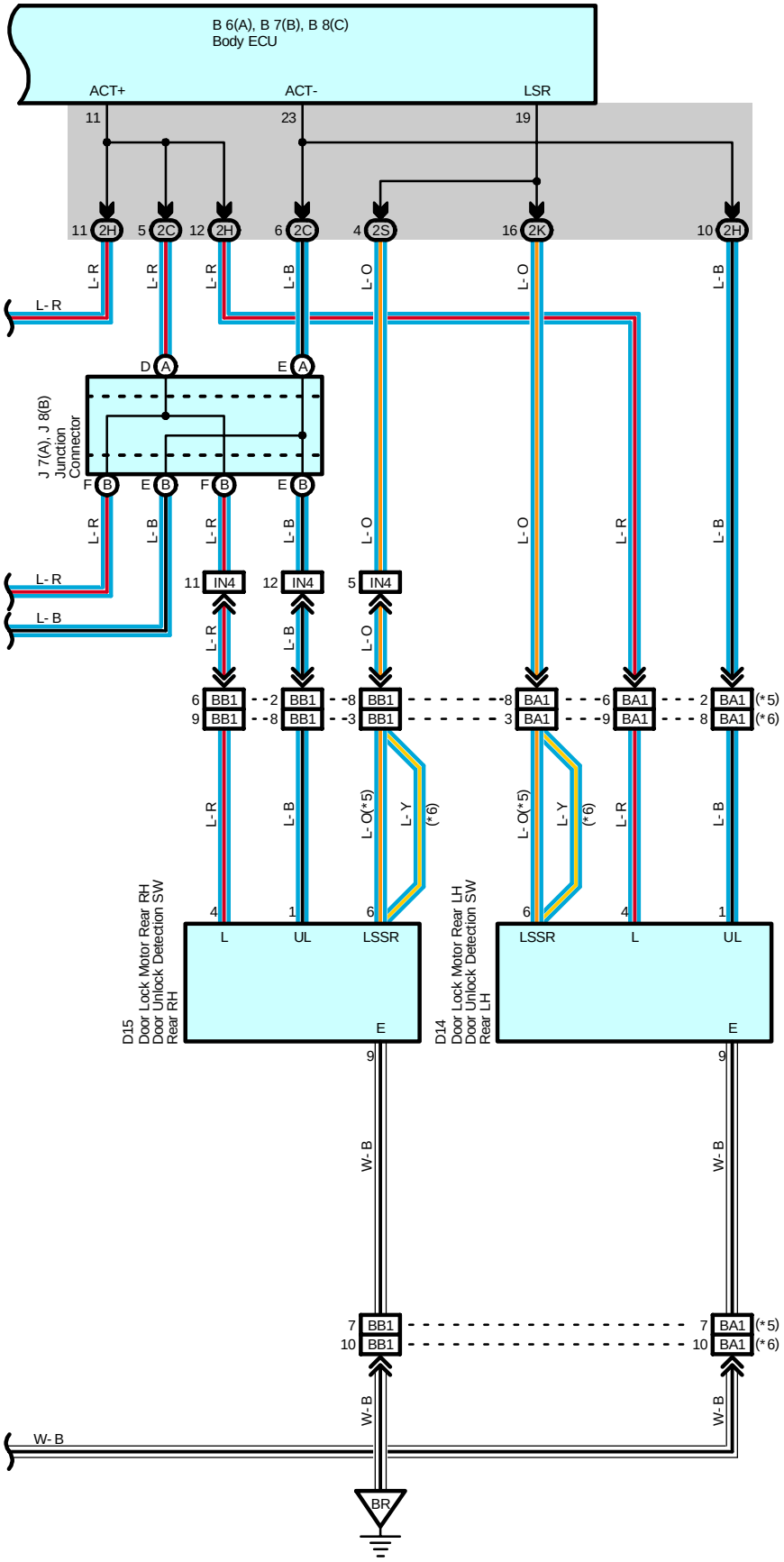

# Theft Deterrent and Door Lock Control

## System Outline

**1. Manual Unlock Operation**

When the door lock control SW of the driver's or front passenger's side door is pushed to UNLOCK, the door lock will unlock.

**2. Manual Lock Operation**

When the door lock control SW of the driver's or front passenger's side door is pushed to LOCK, the door lock will lock.

**3. Door Key Unlock Operation**

* Unlock operation from driver's side door

When the driver's side door is unlocked once using the ignition key, only the driver's side door is unlocked. If this operation is repeated within 3 seconds, all the other doors are unlocked.

* Unlock operation from front passenger's side door

When the front passenger's side door is unlocked using the ignition key, all the other doors are unlocked, too.

## Service Hints

**Body ECU**

9-Ground : Approx. 12 volts with the ignition SW at ON or ST position
12, 24-Ground : Always continuity
1, 2-Ground : Always approx. 12 volts

**○ : Parts Location**

| Code | | See Page | Code | | See Page | Code | See Page |
|---|---|---|---|---|---|---|---|
| A13 | A | 40 | D11 | | 42 | J23 | 41 |
| A40 | B | 40 | D12 | | 42 | L3 | 43 |
| B6 | A | 40 | D13 | | 42 | L4 | 43 |
| B7 | B | 40 | D14 | | 42 | T1 | 37 (*1) |
| B8 | C | 40 | D15 | | 42 | | 39 (*2) |
| D6 | | 42 | E5 | | 36 (*1) | T5 | 41 |
| D7 | | 42 | | | 38 (*2) | U1 | 41 |
| D8 | | 42 | J7 | A | 41 | Z1 | 41 |
| D9 | | 42 | J8 | B | 41 | | |
| D10 | | 42 | J11 | | 42 | | |

**⬭ : Junction Block and Wire Harness Connector**

| Code | See Page | Junction Block and Wire Harness (Connector Location) |
|---|---|---|
| 1B | 25 | Engine Room Main Wire and Engine Room J/B (Engine Compartment Left) |
| 1D | | |
| 2B | 28 | Instrument Panel Wire and Driver Side J/B (Lower Finish Panel) |
| 2C | | |
| 2G | 28 | Engine Room Main Wire and Driver Side J/B (Lower Finish Panel) |
| 2H | 28 | Floor Wire and Driver Side J/B (Lower Finish Panel) |
| 2K | | |
| 2L | 29 | Instrument Panel Wire and Driver Side J/B (Lower Finish Panel) |
| 2M | | |
| 2P | | |
| 2R | | |
| 2S | | |
| 3A | 34 | Instrument Panel Wire and Passenger Side J/B (Instrument Panel Brace RH) |
| 3B | | |

* 1 : 1MZ-FE, 3MZ-FE * 2 : 2AZ-FE * 3 : w/ Power Seat * 4 : w/o Power Seat

**: Connector Joining Wire Harness and Wire Harness**

| Code | See Page | Joining Wire Harness and Wire Harness (Connector Location) |
|---|---|---|
| EA2 | 46 (*1)<br>48 (*2) | Engine Room Main Wire and Engine Room No.2 Wire (Radiator Side Support LH) |
| IA1 | 50 | Front Door LH Wire and Floor Wire (Left Kick Panel) |
| IB1<br>IB2 | 50 | Front Door LH Wire and Instrument Panel Wire (Left Kick Panel) |
| IC2 | 50 | Instrument Panel Wire and Floor Wire (Left Kick Panel) |
| IF3<br>IF4 | 50 | Engine Room Main Wire and Instrument Panel Wire (Right Side of Steering Column Tube) |
| IJ1 | 52 | Instrument Panel Wire and Instrument Panel Wire (Instrument Panel Reinforcement RH) |
| IM1<br>IM2 | 52 | Front Door RH Wire and Instrument Panel Wire (Right Kick Panel) |
| IN4 | 52 | Instrument Panel Wire and Floor No.2 Wire (Right Kick Panel) |
| BA1 | 54 | Rear Door LH Wire and Floor Wire (Left Center Pillar) |
| BB1 | 54 | Rear Door RH Wire and Floor No.2 Wire (Right Center Pillar) |

**: Ground Points**

| Code | See Page | Ground Points Location |
|---|---|---|
| ED | 46 (*1)<br>48 (*2) | Left Fender |
| II | 50 | Cowl Side Panel LH |
| IJ | 50 | Instrument Panel Brace LH |
| BO | 54 | Under the Driver's Seat |
| BQ | 54 | Front Side of Rear Quarter Wheel House LH |
| BR | 54 | Front Side of Rear Quarter Wheel House RH |
| BS | 54 | Lower Back Panel Center |

**: Splice Points**

| Code | See Page | Wire Harness with Splice Points | Code | See Page | Wire Harness with Splice Points |
|---|---|---|---|---|---|
| B4 | 54 | Front Door LH Wire | B13 | 54 | Front Door RH Wire |

* 1 : 1MZ-FE, 3MZ-FE * 2 : 2AZ-FE * 3 : w/ Power Seat * 4 : w/o Power Seat

# Wireless Door Lock Control

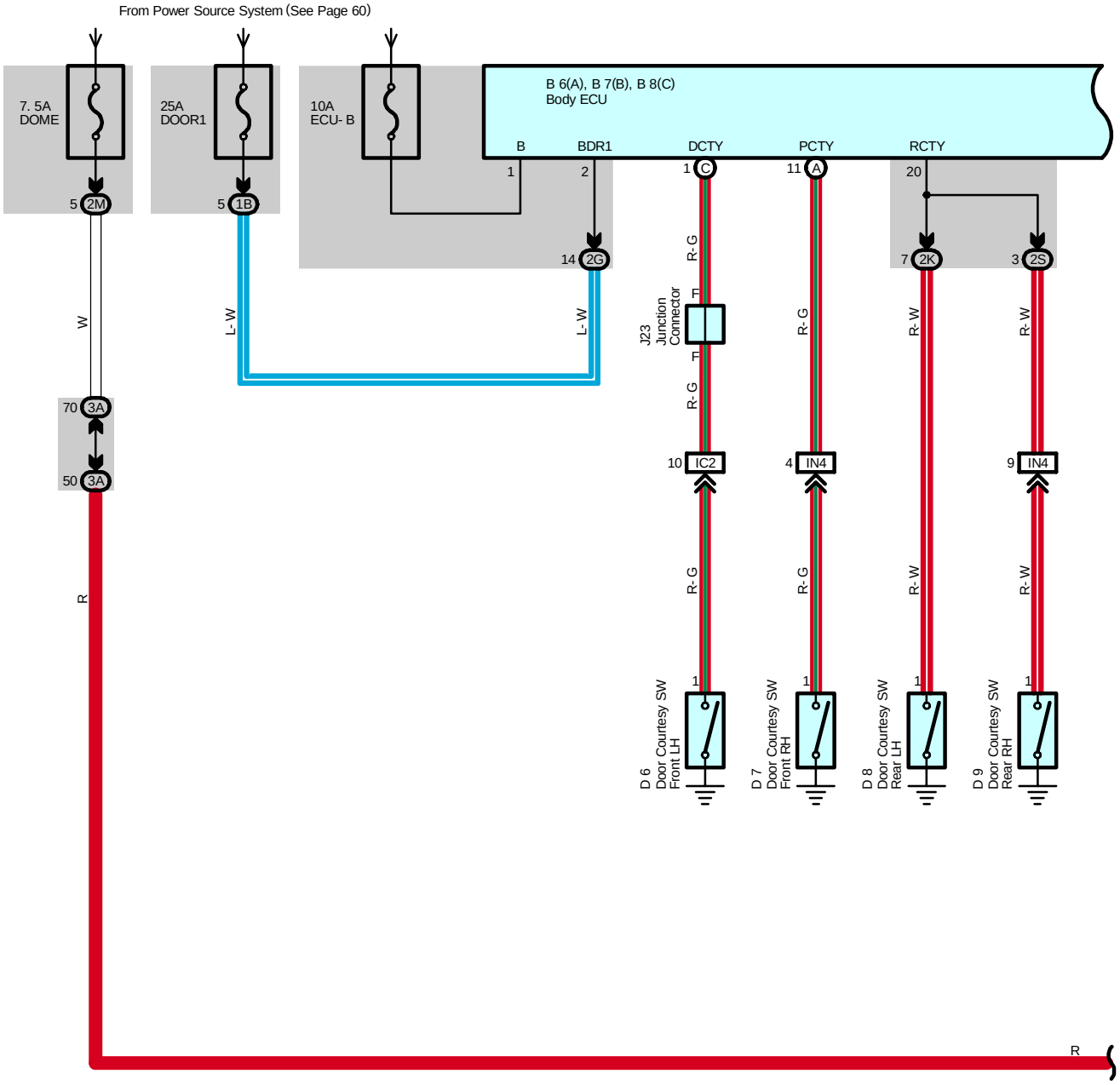

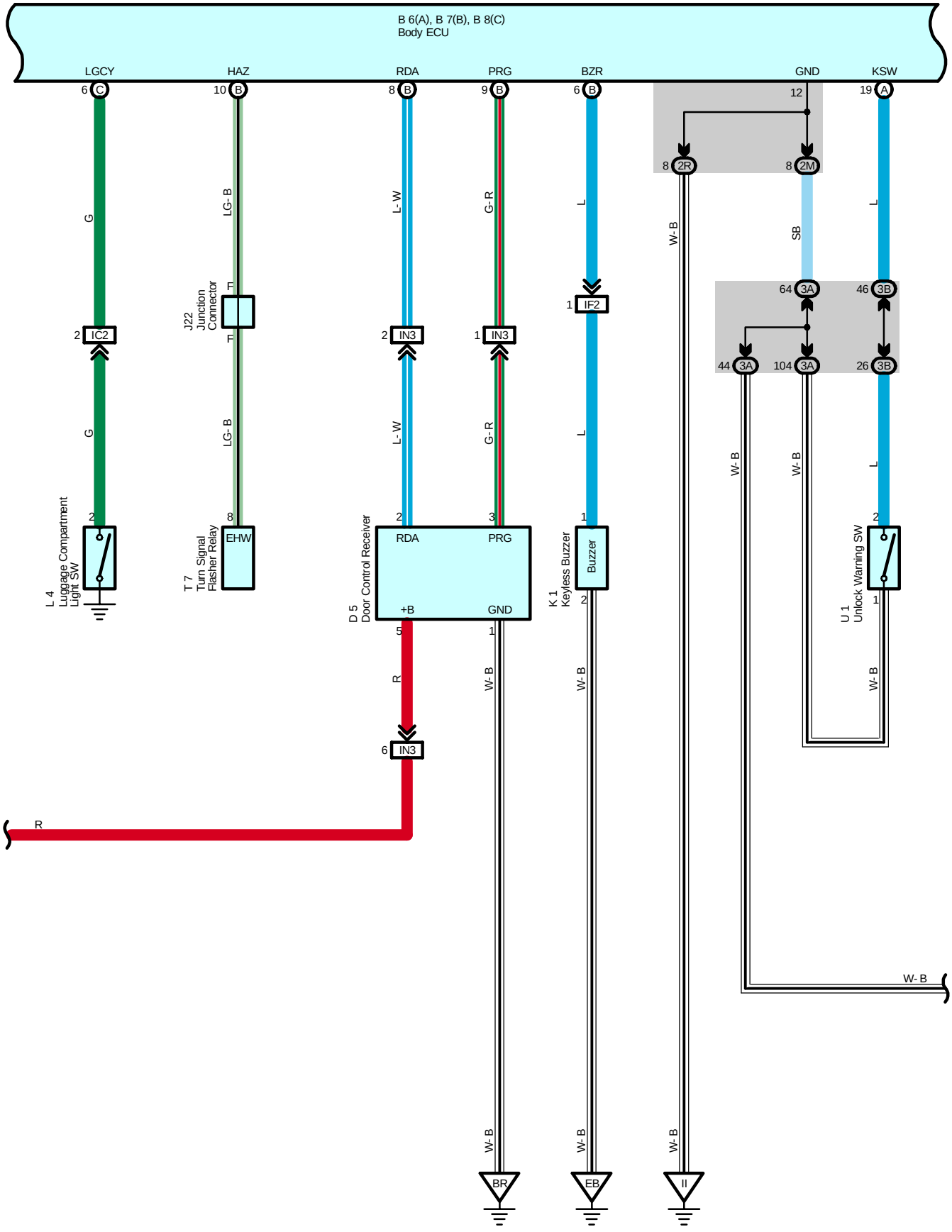
B 6(A), B 7(B), B 8(C)
Body ECU
LGCY
HAZ
RDA
PRG
BZR
GND
KSW
6 C
10 B
8 B
9 B
6 B
12
19 A
8 2R
8 2M
G
LG- B
L- W
G- R
L
W- B
SB
L
J22
Junction
Connector
F
F
2 IC2
2 IN3
1 IN3
1 IF2
64 3A
46 3B
44 3A
104 3A
26 3B
G
LG- B
L- W
G- R
L
W- B
W- B
L
2
8
2
3
1
2
1
L 4
Luggage Compartment
Light SW
T 7
Turn Signal
Flasher Relay
EHW
D 5
Door Control Receiver
RDA
PRG
+B
GND
K 1
Keyless Buzzer
Buzzer
U 1
Unlock Warning SW
5
1
2
1
R
W- B
W- B
W- B
W- B
6 IN3
R
W- B
BR
EB
II

# Wireless Door Lock Control

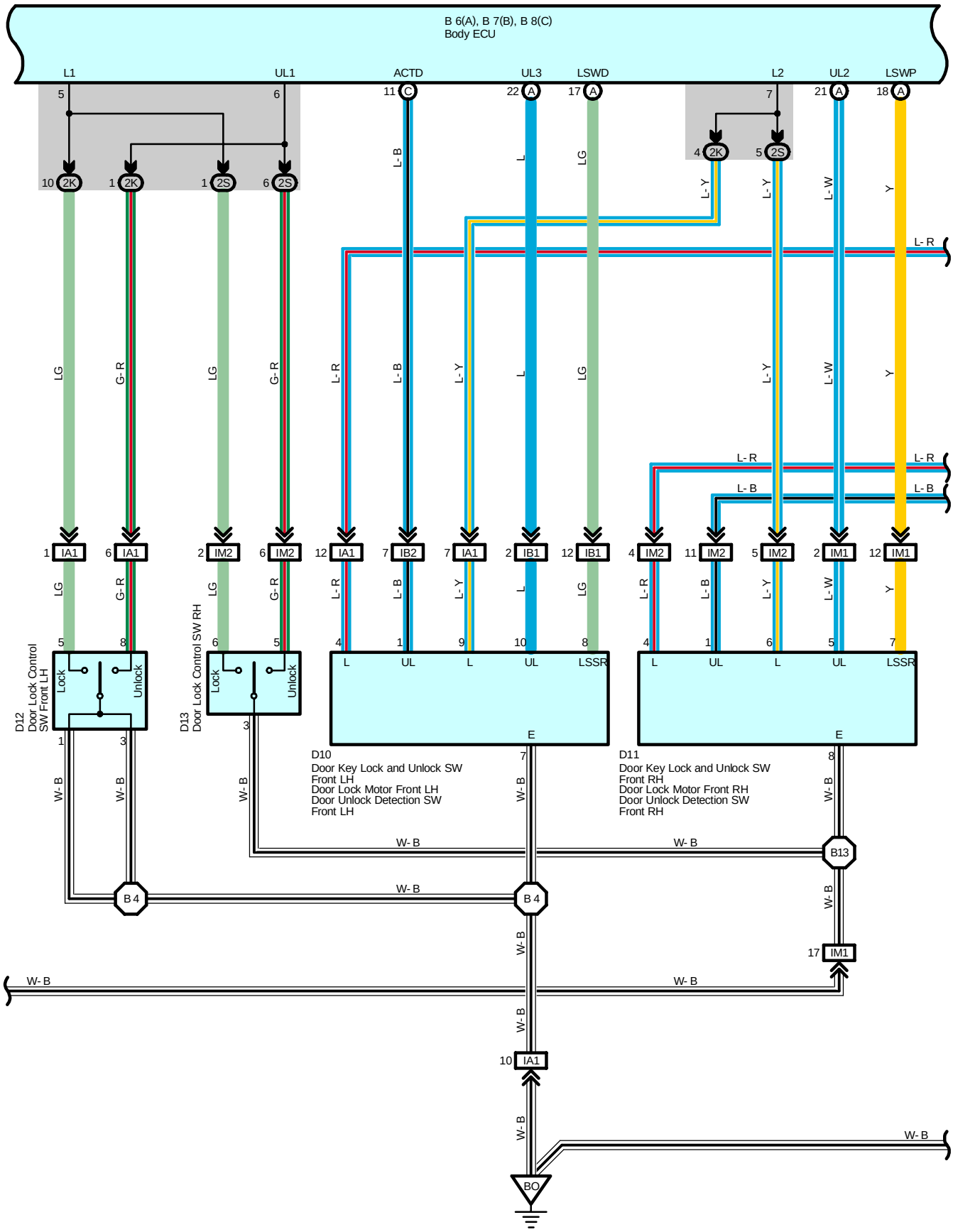

* 1 : TMMK Made
* 2 : TMC Made

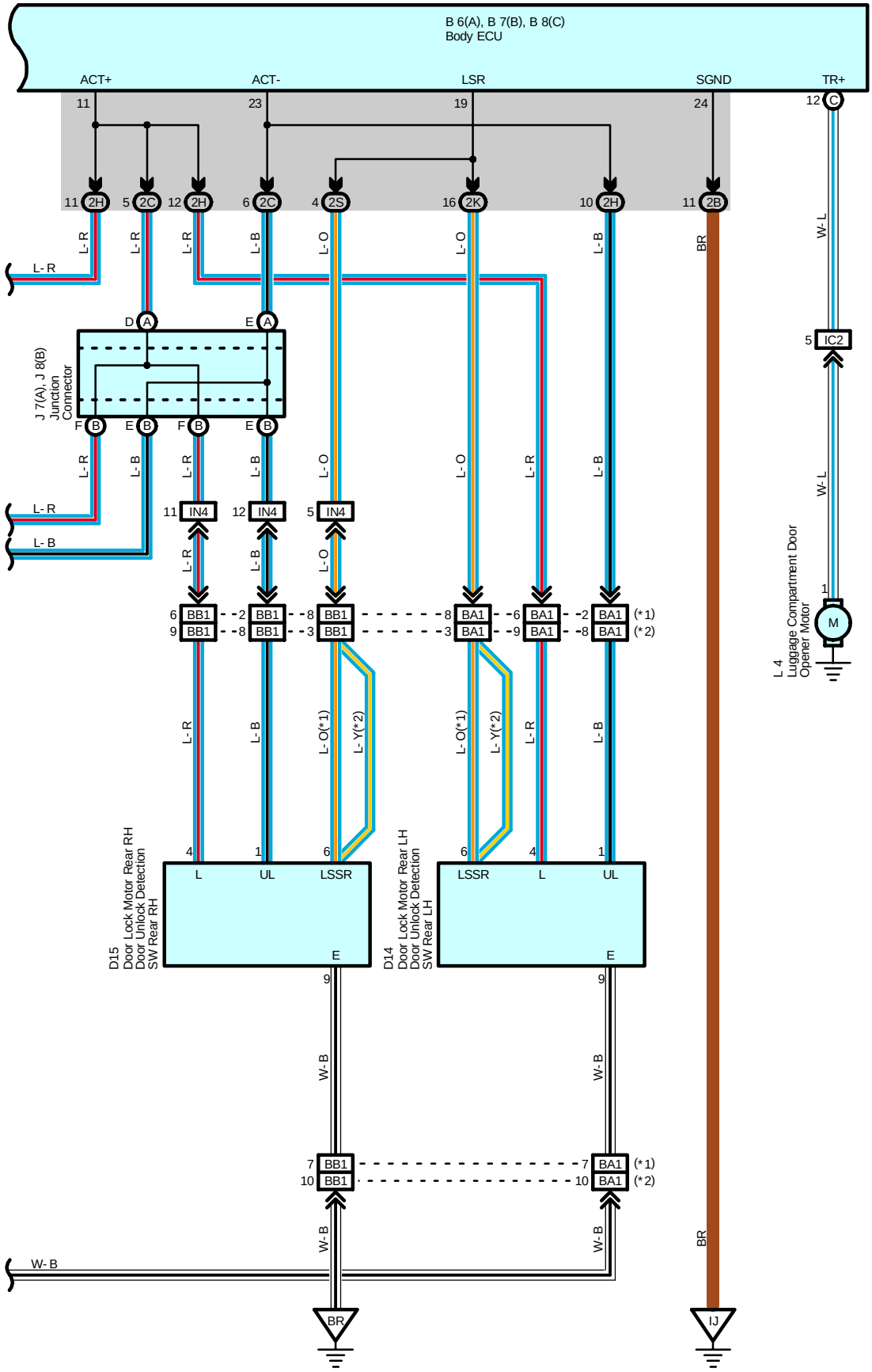

# Wireless Door Lock Control

**System Outline**

Door lock control (Lock and unlock) and panic control (Theft alarm and flash) is performed by remote control, without the ignition key inserted in the door key cylinder, using low-power electrical waves emitted by a transmitter.

**1. Wireless Door Lock or Unlock Normal Operation**

With the ignition key not inserted into the ignition key cylinder (Unlock warning SW off) and all the doors completely closed, when the lock or unlock button (Transmitter) is pushed, the door control receiver receives the electrical waves from the transmitter, and sends a signal to the body ECU, causing it to operate.
As a result, the body ECU judges whether the door is locked or unlocked based on the signal from the door lock motor and door unlock detection SW, and sends a signal to switch the condition from lock to unlock or vice versa, causing the door lock motor to operate.

**2. Visual Confirmation of Lock or Unlock**

If all doors indicate that they are locked after the lock command, turn signal light will flash once. If any door indicates that it is open after the unlock command, turn signal light will flash twice.

**3. Buzzer Sound Function**

If all doors indicate that they are locked after the lock command, the keyless buzzer goes on once. If any door indicates that it is open after the unlock command, the keyless buzzer goes on twice.

**4. Illuminated Entry Function**

When the body ECU detects the unlock state after the unlock operation has been made, it turns on the lights, such as the ignition key cylinder light and interior light for approx. 15 sec. If all the doors are locked during this operation, lighting is cancelled and the lights immediately fade out.

**5. Wireless Door Unlock Operation**

Pushing the unlock button (Transmitter) once, driver's door is unlocked. Furthermore, pushing the button again within 3 seconds, the other doors are unlocked.

**6. Automatic Lock Operation**

With the ignition key not inserted into the ignition key cylinder (Unlock warning SW off) and all the doors completely closed, after pushing the button (Transmitter) to unlock all the doors, if a door is not opened within 30 seconds, all the doors will be automatically relocked.

**7. Wireless Control Stop Function**

If a door is open (Door courtesy SW on), a signal is input from the door courtesy SW to the body ECU stopping wireless door lock or unlock.
If the ignition key is in the ignition key cylinder (Unlock warning SW on), the unlock warning SW inputs a signal to the body ECU stopping wireless door lock or unlock.

**8. Repeat Function**

If the door lock or unlock condition does not change after wireless door lock or unlock operation, 2 seconds later, the body ECU sends current again to the door lock motor.

**9. Remote Panic Operation**

Panic will function when doors are locked or unlocked, open or closed. When the panic button (Transmitter) is pushed once, theft alarm and horn sounds and turn signal light, headlights and taillight flash. Then, the panic or the unlock button (Transmitter) is pushed once more, sounding and flashing will stop. Panic will not function when ignition key is in ignition key cylinder.

**Service Hints**

**D6, D7, D8, D9 Door Courtesy SW Front LH, RH, Rear LH, RH**

1-Ground : Closed with the each door open

**U1 Unlock Warning SW**

2-1 : Continuity with the ignition key in the cylinder

**D5 Door Control Receiver**

5-Ground : Always approx. 12 volts
1-Ground : Always continuity

## : Parts Location

| Code | | See Page | Code | | See Page | Code | See Page |
|---|---|---|---|---|---|---|---|
| B6 | A | 40 | D10 | | 42 | J22 | 41 |
| B7 | B | 40 | D11 | | 42 | J23 | 41 |
| B8 | C | 40 | D12 | | 42 | K1 | 37 (*1) |
| D5 | | 42 | D13 | | 42 | | 39 (*2) |
| D6 | | 42 | D14 | | 42 | L4 | 43 |
| D7 | | 42 | D15 | | 42 | T7 | 41 |
| D8 | | 42 | J7 | A | 41 | U1 | 41 |
| D9 | | 42 | J8 | B | 41 | | |

## : Junction Block and Wire Harness Connector

| Code | See Page | Junction Block and Wire Harness (Connector Location) |
|---|---|---|
| 1B | 25 | Engine Room Main Wire and Engine Room J/B (Engine Compartment Left) |
| 2B | 28 | Instrument Panel Wire and Driver Side J/B (Lower Finish Panel) |
| 2C | | |
| 2G | 28 | Engine Room Main Wire and Driver Side J/B (Lower Finish Panel) |
| 2H | 28 | Floor Wire and Driver Side J/B (Lower Finish Panel) |
| 2K | | |
| 2M | 29 | Instrument Panel Wire and Driver Side J/B (Lower Finish Panel) |
| 2R | | |
| 2S | | |
| 3A | 34 | Instrument Panel Wire and Passenger Side J/B (Instrument Panel Brace RH) |
| 3B | | |

## : Connector Joining Wire Harness and Wire Harness

| Code | See Page | Joining Wire Harness and Wire Harness (Connector Location) |
|---|---|---|
| IA1 | 50 | Front Door LH Wire and Floor Wire (Left Kick Panel) |
| IB1 | 50 | Front Door LH Wire and Instrument Panel Wire (Left Kick Panel) |
| IB2 | | |
| IC2 | 50 | Instrument Panel Wire and Floor Wire (Left Kick Panel) |
| IF2 | 50 | Engine Room Main Wire and Instrument Panel Wire (Right Side of Steering Column Tube) |
| IM1 | 52 | Front Door RH Wire and Instrument Panel Wire (Right Kick Panel) |
| IM2 | | |
| IN3 | 52 | Instrument Panel Wire and Floor No.2 Wire (Right Kick Panel) |
| IN4 | | |
| BA1 | 54 | Rear Door LH Wire and Floor Wire (Left Center Pillar) |
| BB1 | 54 | Rear Door RH Wire and Floor No.2 Wire (Right Center Pillar) |

## : Ground Points

| Code | See Page | Ground Points Location |
|---|---|---|
| EB | 46 (*1) | Right Fender |
| | 48 (*2) | |
| II | 50 | Cowl Side Panel LH |
| IJ | 50 | Instrument Panel Brace LH |
| BO | 54 | Under the Driver's Seat |
| BR | 54 | Front Side of Rear Quarter Wheel House RH |

## : Splice Points

| Code | See Page | Wire Harness with Splice Points | Code | See Page | Wire Harness with Splice Points |
|---|---|---|---|---|---|
| B4 | 54 | Front Door LH Wire | B13 | 54 | Front Door RH Wire |

* 1 : 1MZ-FE, 3MZ-FE  * 2 : 2AZ-FE  * 3 : w/ Power Seat  * 4 : w/o Power Seat

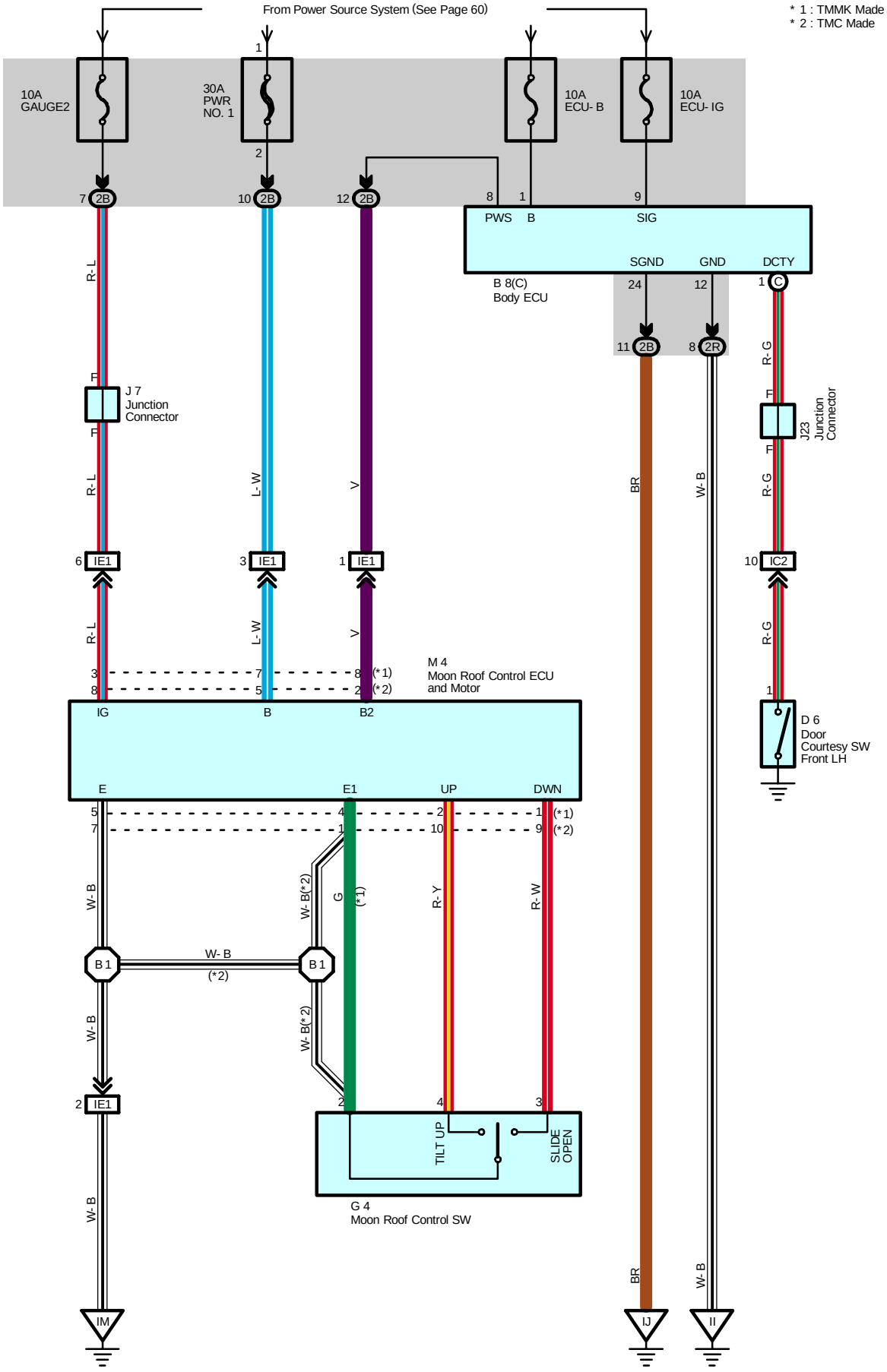
From Power Source System (See Page 60)
* 1 : TMMK Made
* 2 : TMC Made
10A GAUGE2
30A PWR NO. 1
10A ECU- B
10A ECU- IG
PWS
B
SIG
SGND
GND
DCTY
B 8(C) Body ECU
J 7 Junction Connector
J23 Junction Connector
D 6 Door Courtesy SW Front LH
M 4 Moon Roof Control ECU and Motor
IG
B
B2
E
E1
UP
DWN
G 4 Moon Roof Control SW
TILT UP
SLIDE OPEN
R- L
L- W
V
BR
W- B
R- G
R- Y
R- W
W- B(*2)
G
(*1)
(*2)
IM
IJ
II

**Service Hints**

**M4 Moon Roof Control ECU and Motor**

3 (TMMK Made), 8 (TMC Made)-Ground : Approx. 12 volts with the ignition SW at ON or ST position
7 (TMMK Made), 5 (TMC Made)-Ground : Always approx. 12 volts
5 (TMMK Made), 7 (TMC Made)-Ground : Always continuity

**: Parts Location**

| Code | See Page | Code | See Page | Code | See Page |
|---|---|---|---|---|---|
| B8 C | 40 | G4 | 42 | J23 | 41 |
| D6 | 42 | J7 | 41 | M4 | 43 |

**: Junction Block and Wire Harness Connector**

| Code | See Page | Junction Block and Wire Harness (Connector Location) |
|---|---|---|
| 2B | 28 | Instrument Panel Wire and Driver Side J/B (Lower Finish Panel) |
| 2R | 29 | |

**: Connector Joining Wire Harness and Wire Harness**

| Code | See Page | Joining Wire Harness and Wire Harness (Connector Location) |
|---|---|---|
| IC2 | 50 | Instrument Panel Wire and Floor Wire (Left Kick Panel) |
| IE1 | 50 | Instrument Panel Wire and Roof Wire (Inside of Front Left Pillar) |

**: Ground Points**

| Code | See Page | Ground Points Location |
|---|---|---|
| II | 50 | Cowl Side Panel LH |
| IJ | 50 | Instrument Panel Brace LH |
| IM | 50 | Instrument Panel Reinforcement RH |

**: Splice Points**

| Code | See Page | Wire Harness with Splice Points | Code | See Page | Wire Harness with Splice Points |
|---|---|---|---|---|---|
| B1 | 54 | Roof Wire | | | |

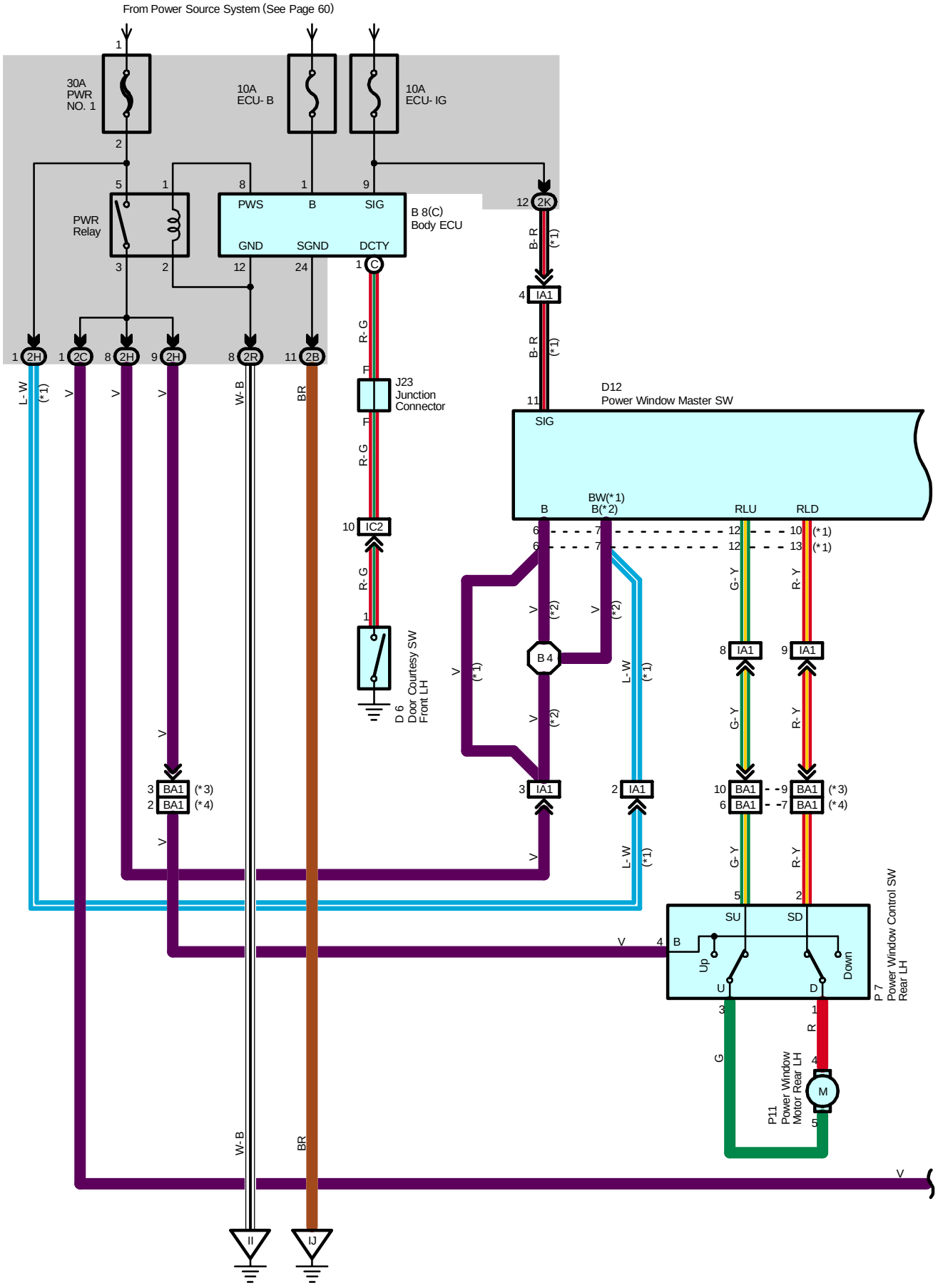
From Power Source System (See Page 60)
30A PWR NO. 1
10A ECU- B
10A ECU- IG
PWR Relay
PWS
B
SIG
GND
SGND
DCTY
B 8(C) Body ECU
J23 Junction Connector
D12 Power Window Master SW
SIG
BW(*1) B(*2)
RLU
RLD
B 4
D 6 Door Courtesy SW Front LH
P 7 Power Window Control SW Rear LH
SU
SD
Up
Down
P11 Power Window Motor Rear LH
M
W-B
BR
II
IJ

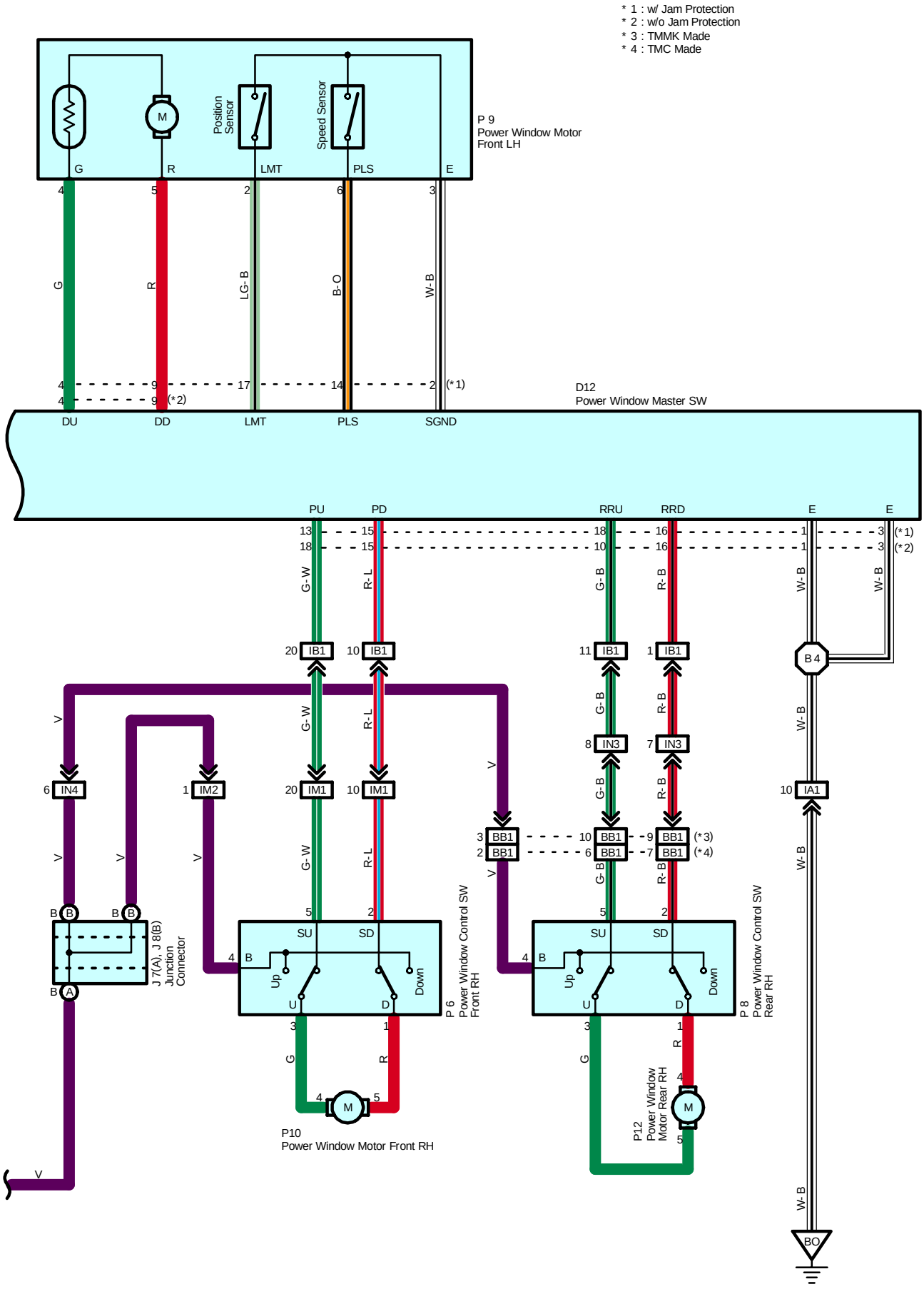
* 1 : w/ Jam Protection
* 2 : w/o Jam Protection
* 3 : TMMK Made
* 4 : TMC Made
P 9
Power Window Motor
Front LH
Position Sensor
Speed Sensor
G
R
LMT
PLS
E
G
R
LG-B
B-O
W-B
(*1)
(*2)
DU
DD
LMT
PLS
SGND
D12
Power Window Master SW
PU
PD
RRU
RRD
E
E
G-W
R-L
G-B
R-B
W-B
IB1
IN4
IM2
IM1
IN3
BB1
IA1
B4
BO
J 7(A), J 8(B)
Junction
Connector
P 6
Power Window Control SW
Front RH
P 8
Power Window Control SW
Rear RH
SU
SD
Up
Down
P10
Power Window Motor Front RH
P12
Power Window
Motor Rear RH

**System Outline**

**1. Manual Operation (Driver's Window)**

With the ignition SW turned on and with the power window master SW in UP position, the current flowing from TERMINAL B or BW of the power window master SW flows to TERMINAL DU of the master SW to TERMINAL 4 of the power window motor to TERMINAL 5 to TERMINAL DD of the master SW to TERMINAL E to GROUND and causes the power window motor to rotate in the up direction. The window ascends only while the SW is being pushed.

In down operation, the flow of current from TERMINAL B or BW of the power window master SW to TERMINAL DD of the master SW causes the flow of current from TERMINAL 5 of the power window motor to TERMINAL 4 to TERMINAL DU of the master SW to TERMINAL E to GROUND, flowing in the opposite detection to manual up operation and causing the motor to rotate in reverse, lowering the window.

**2. Auto Down Operation (Driver's Window)**

When the driver's window SW is pushed strongly to the down side, the current flowing to TERMINAL B or BW of the power window master SW flows to the down contact point and auto down contact point of the driver's SW.

This activates the relay (Down side) inside the power window master SW and the hold circuit also turns on at the same time, so the relay (Down side) remains activated even when the SW is released.

Current flows at this time from TERMINAL B or BW of the power window master SW to TERMINAL DD to TERMINAL 5 of the power window motor to TERMINAL 4 to TERMINAL DU of the power window master SW to TERMINAL E to GROUND, so the motor continues to operate until the driver's window is fully down.

When the driver's window finishes down operation and the hold circuit goes off, so the relay (Down side) also turns off. This stops the current flowing from TERMINAL B or BW of the power window master SW to TERMINAL DD is cut off, so the power window motor stops and auto down operation stops.

When the driver's SW is pulled to the up side during auto down operation, the hold circuit is turned off so the current flowing from TERMINAL B or BW of the power window master SW to TERMINAL DD is cut off and the power window motor stops. If the SW remains pulled up the relay (Up side) is activated, so current flows from TERMINAL B or BW of the power window master SW to TERMINAL DU to TERMINAL 4 of the power window motor to TERMINAL 5 to TERMINAL DD to TERMINAL E to GROUND, the power window motor rotates in the up direction and manual up operation occurs while the SW is pulled up.

**3. Manual Operation (Front RH Window)**

With the power window control SW front RH pulled to the up side, the current flowing from TERMINAL 4 of the power window control SW flows to TERMINAL 3 of the power window control SW to TERMINAL 4 of the power window motor to TERMINAL 5 to TERMINAL 1 of the power window control SW to TERMINAL 2 to TERMINAL PD of the master SW to TERMINAL E to GROUND and causes the power window motor front RH to rotate in the up direction. The up operation continues only while the power window control SW is pulled to the up side. When the window descends, the current flowing to the motor flows in the opposite direction, from TERMINAL 5 to TERMINAL 4, and the motor rotates in reverse. When the window lock SW is pushed to the lock side, the ground circuit to the front RH window becomes open.

As a result, even if Open/Close operation of the front RH window is tried, the current from TERMINAL E of the power window master SW is not grounded and the motor does not rotate, so the front RH window can not be operated and window lock occurs.

**4. Manual Operation (Rear LH, RH Window)**

With the power window control SW rear LH, RH pulled to the up side, the current flowing from TERMINAL 4 of the power window control SW flows to TERMINAL 3 of the power control SW to TERMINAL 5 of the power window motor to TERMINAL 4 to TERMINAL 1 of the power window control SW to TERMINAL 2 to TERMINAL RLD or RRD of the master SW to TERMINAL E to GROUND and causes the power window motor rear LH, RH to rotate in the up direction. The up operation continues only while the power window control SW is pulled to the up side. When the window descends, the current flowing to the motor flows in the opposite direction, from TERMINAL 4 to TERMINAL 5, and the motor rotates in reverse. When the window lock SW is pushed to the lock side, the ground circuit to the rear LH, RH window becomes open.

As a result, even if Open/Close operation of the rear LH, RH window is tried, the current from TERMINAL E of the power window master SW is not grounded and the motor does not rotate, so the rear LH, RH window can not be operated and window lock occurs.

**5. Key Off Power Window Operation**

With the ignition SW turned from on to off, the body ECU operates and current flows from the ECU-B fuse to TERMINAL 1 of the body ECU to TERMINAL 8 to TERMINAL 1 of the PWR relay to TERMINAL 2 to GROUND for about 43 seconds. The same as normal operation, the current flows from the PWR NO.1 fuse to TERMINAL 5 of the PWR relay to TERMINAL 3 to TERMINAL B or BW of the power window master SW and TERMINAL 4 (Front RH, Rear LH, RH) of the power window control SW. As a result, for about 43 seconds after the ignition SW is turned off, the functioning of this ECU makes it possible to raise and lower the power window. Also, by opening the front door LH (Door courtesy SW on) within about 43 seconds after turning the ignition SW to off, a signal is input to TERMINAL (C) 1 of the body ECU. As a result, the PWR relay turned off, and up and down movement of the power window stops.

**Service Hints**

**D12 Power Window Master SW**

B, BW-Ground : Approx. 12 volts with the ignition SW at ON position or key off power window operation (w/o jam protection)
: Always approx. 12 volts (w/ jam protection)
E-Ground : Always continuity
DU-Ground : Approx. 12 volts with the ignition SW on and the master SW (Driver's window) at UP position
DD-Ground : Approx. 12 volts with the ignition SW on and the master SW (Driver's window) at DOWN or AUTO DOWN position

**Window Lock SW**

Open with the window lock SW at LOCK position

**: Parts Location**

| Code | | See Page | Code | See Page | Code | See Page |
|---|---|---|---|---|---|---|
| B8 | C | 40 | J23 | 41 | P10 | 43 |
| D6 | | 42 | P6 | 43 | P11 | 43 |
| D12 | | 42 | P7 | 43 | P12 | 43 |
| J7 | A | 41 | P8 | 43 | | |
| J8 | B | 41 | P9 | 43 | | |

**: Junction Block and Wire Harness Connector**

| Code | See Page | Junction Block and Wire Harness (Connector Location) |
|---|---|---|
| 2B | 28 | Instrument Panel Wire and Driver Side J/B (Lower Finish Panel) |
| 2C | | |
| 2H | 28 | Floor Wire and Driver Side J/B (Lower Finish Panel) |
| 2K | | |
| 2R | 29 | Instrument Panel Wire and Driver Side J/B (Lower Finish Panel) |

**: Connector Joining Wire Harness and Wire Harness**

| Code | See Page | Joining Wire Harness and Wire Harness (Connector Location) |
|---|---|---|
| IA1 | 50 | Front Door LH Wire and Floor Wire (Left Kick Panel) |
| IB1 | 50 | Front Door LH Wire and Instrument Panel Wire (Left Kick Panel) |
| IC2 | 50 | Instrument Panel Wire and Floor Wire (Left Kick Panel) |
| IM1 | 52 | Front Door RH Wire and Instrument Panel Wire (Right Kick Panel) |
| IM2 | | |
| IN3 | 52 | Instrument Panel Wire and Floor No.2 Wire (Right Kick Panel) |
| IN4 | | |
| BA1 | 54 | Rear Door LH Wire and Floor Wire (Left Center Pillar) |
| BB1 | 54 | Rear Door RH Wire and Floor No.2 Wire (Right Center Pillar) |

**: Ground Points**

| Code | See Page | Ground Points Location |
|---|---|---|
| II | 50 | Cowl Side Panel LH |
| IJ | 50 | Instrument Panel Brace LH |
| BO | 54 | Under the Driver's Seat |

**: Splice Points**

| Code | See Page | Wire Harness with Splice Points | Code | See Page | Wire Harness with Splice Points |
|---|---|---|---|---|---|
| B4 | 54 | Front Door LH Wire | | | |

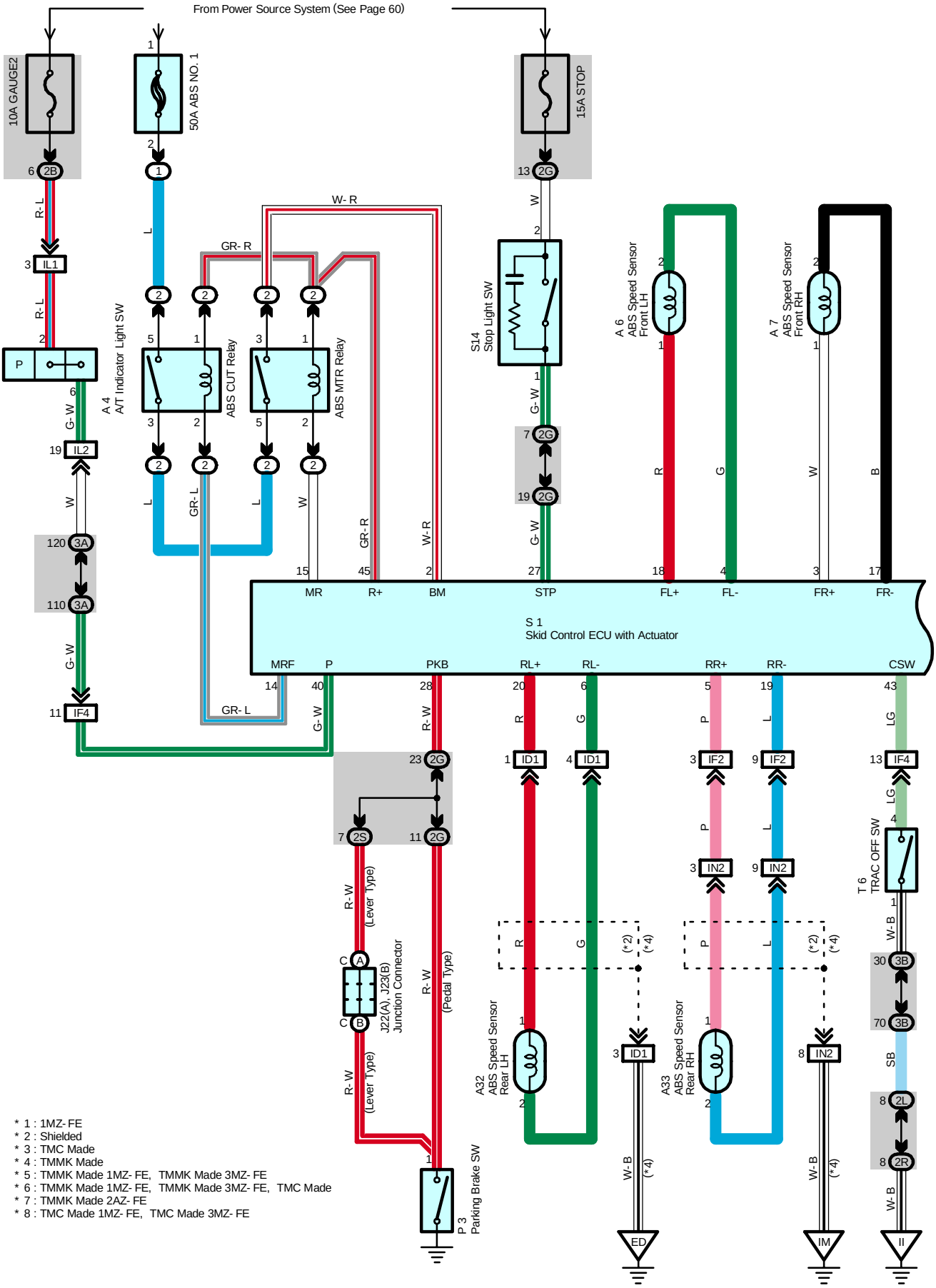
From Power Source System (See Page 60)
10A GAUGE2
50A ABS NO. 1
15A STOP
A 4
A/T Indicator Light SW
ABS CUT Relay
ABS MTR Relay
S14
Stop Light SW
A 6
ABS Speed Sensor
Front LH
A 7
ABS Speed Sensor
Front RH
S 1
Skid Control ECU with Actuator
MR
R+
BM
STP
FL+
FL-
FR+
FR-
MRF
P
PKB
RL+
RL-
RR+
RR-
CSW
J22(A), J23(B)
Junction Connector
(Lever Type)
(Pedal Type)
P 3
Parking Brake SW
A32
ABS Speed Sensor
Rear LH
A33
ABS Speed Sensor
Rear RH
T 6
TRAC OFF SW
ED
IM
II
* 1 : 1MZ- FE
* 2 : Shielded
* 3 : TMC Made
* 4 : TMMK Made
* 5 : TMMK Made 1MZ- FE, TMMK Made 3MZ- FE
* 6 : TMMK Made 1MZ- FE, TMMK Made 3MZ- FE, TMC Made
* 7 : TMMK Made 2AZ- FE
* 8 : TMC Made 1MZ- FE, TMC Made 3MZ- FE

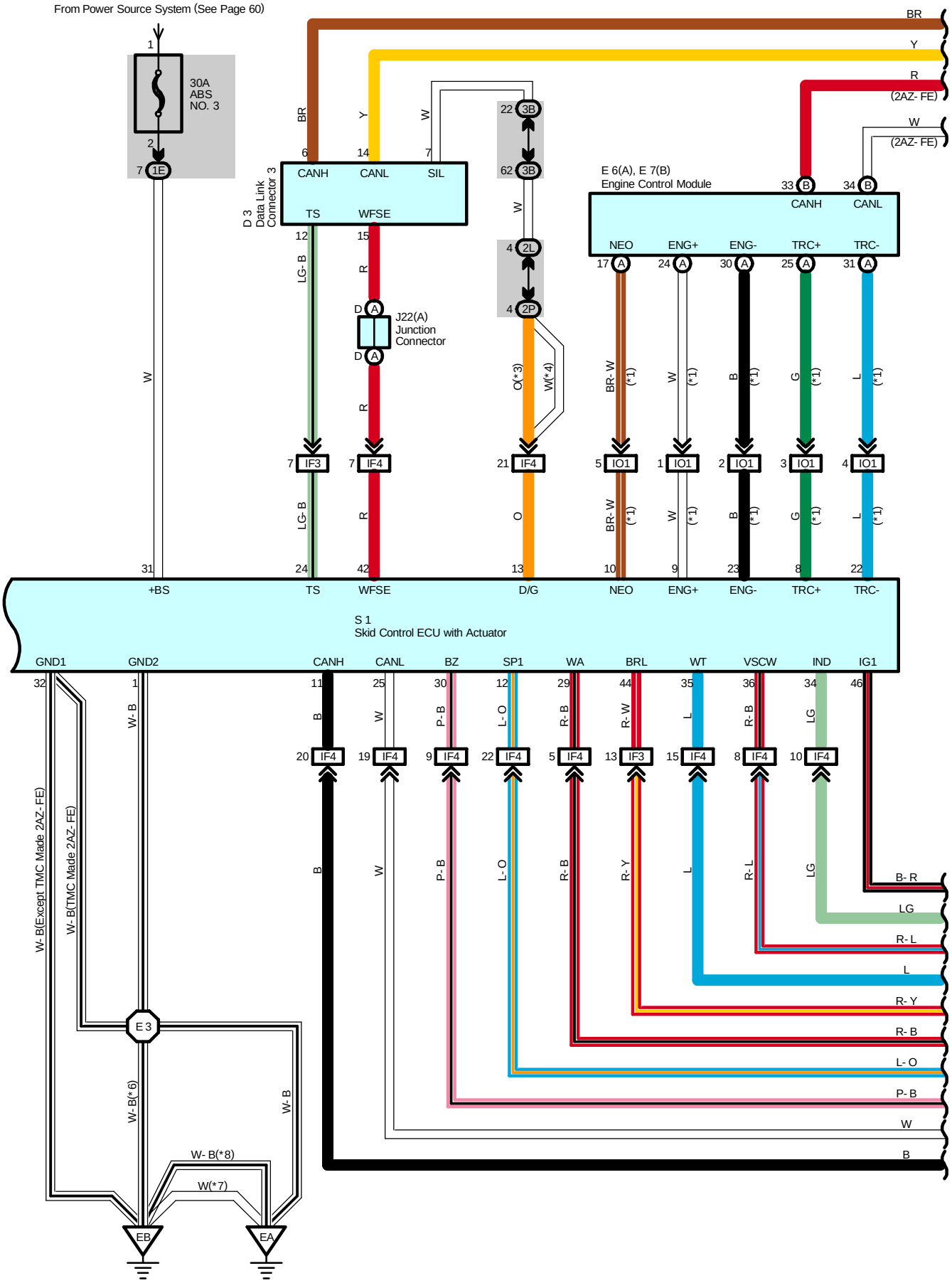
From Power Source System (See Page 60)
30A
ABS
NO. 3
D 3
Data Link
Connector 3
CANH
CANL
SIL
TS
WFSE
J22(A)
Junction
Connector
E 6(A), E 7(B)
Engine Control Module
NEO
ENG+
ENG-
TRC+
TRC-
S 1
Skid Control ECU with Actuator
GND1
GND2
CANH
CANL
BZ
SP1
WA
BRL
WT
VSCW
IND
IG1
+BS
TS
WFSE
D/G
NEO
ENG+
ENG-
TRC+
TRC-
E 3
EB
EA
W- B(Except TMC Made 2AZ- FE)
W- B(TMC Made 2AZ- FE)
W- B(*6)
W- B(*8)
W(*7)
(2AZ- FE)
(*1)
O(*3)
W(*4)

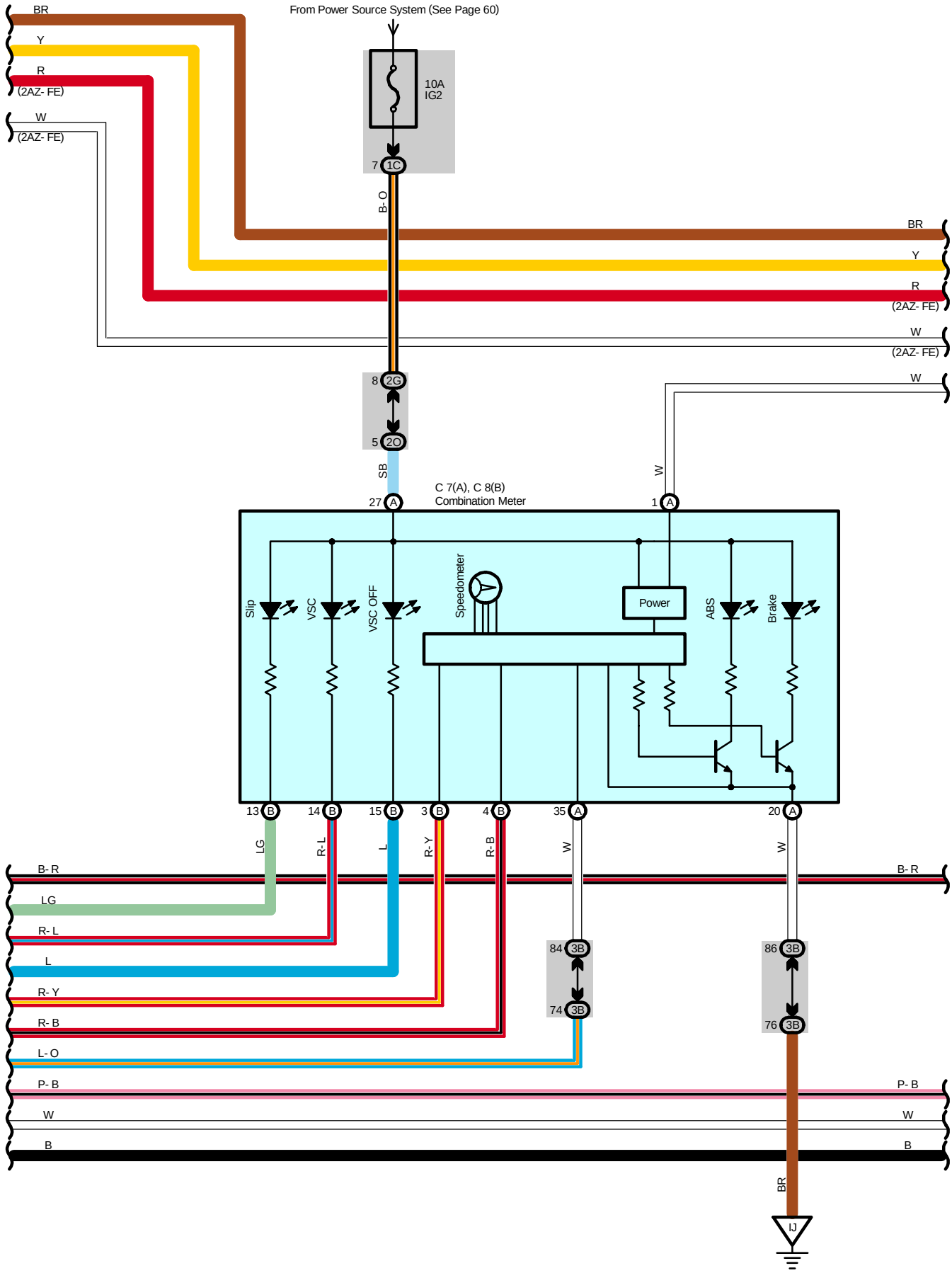
From Power Source System (See Page 60)
10A
IG2
7 1C
B-O
BR
Y
R
(2AZ- FE)
W
(2AZ- FE)
8 2G
5 2O
SB
27 A
C 7(A), C 8(B)
Combination Meter
1 A
W
Slip
VSC
VSC OFF
Speedometer
Power
ABS
Brake
13 B
14 B
15 B
3 B
4 B
35 A
20 A
LG
R-L
L
R-Y
R-B
W
B-R
L-O
P-B
84 3B
74 3B
86 3B
76 3B
IJ

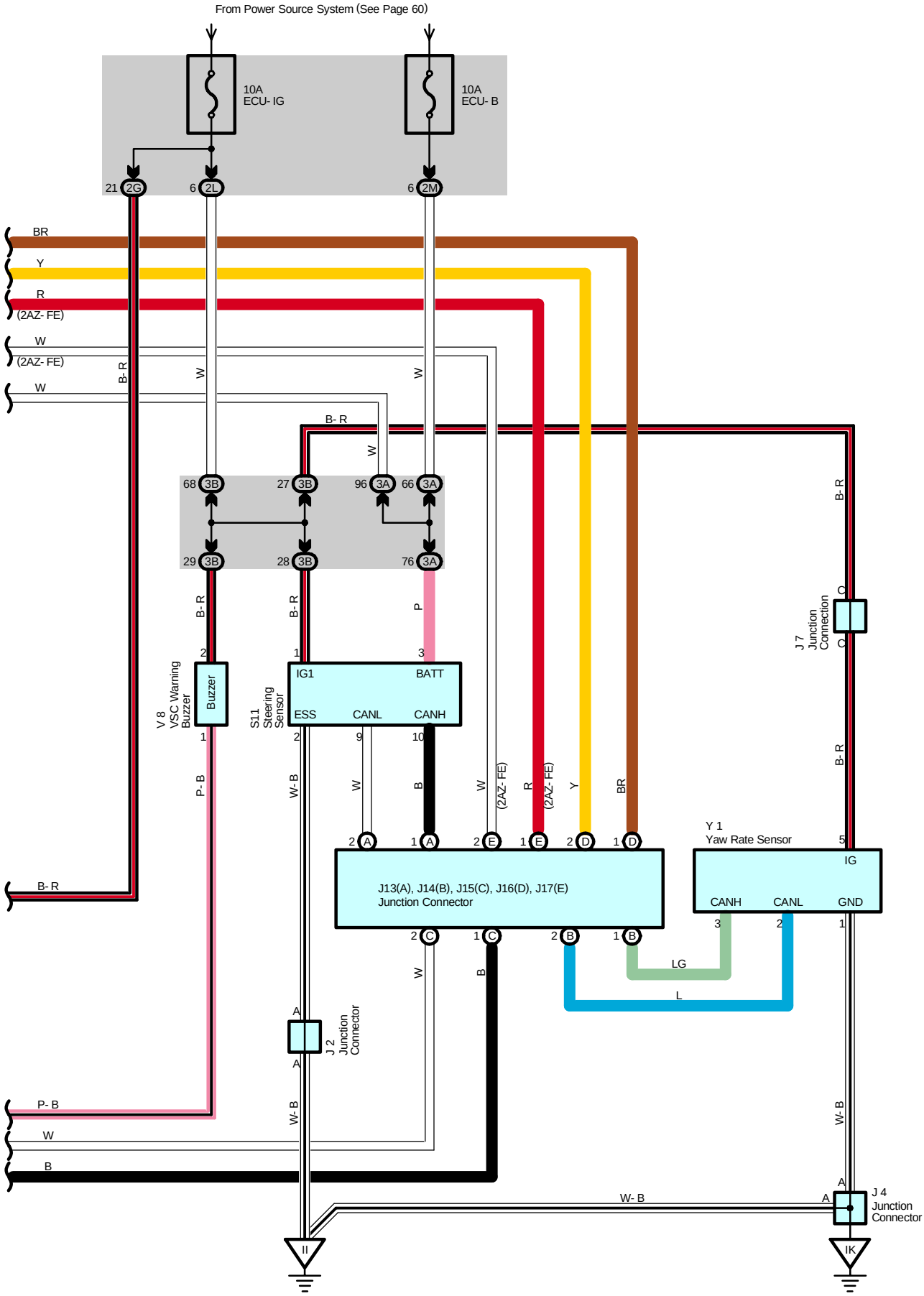
From Power Source System (See Page 60)
10A
ECU- IG
10A
ECU- B
21 2G
6 2L
6 2M
BR
Y
R
(2AZ- FE)
W
(2AZ- FE)
W
B- R
W
W
B- R
W
68 3B
27 3B
96 3A
66 3A
29 3B
28 3B
76 3A
B- R
B- R
P
2
1
3
V 8
VSC Warning
Buzzer
Buzzer
S11
Steering
Sensor
IG1
BATT
ESS
CANL
CANH
J 7
Junction
Connection
C
C
B- R
B- R
P- B
W- B
W
B
W
(2AZ- FE)
R
(2AZ- FE)
Y
BR
2 A
1 A
2 E
1 E
2 D
1 D
J13(A), J14(B), J15(C), J16(D), J17(E)
Junction Connector
Y 1
Yaw Rate Sensor
IG
CANH
CANL
GND
5
3
2
1
2 C
1 C
2 B
1 B
LG
L
W
B
A
A
J 2
Junction
Connector
P- B
W
B
W- B
W- B
A
A
J 4
Junction
Connector
II
IK
B- R

## System Outline

The vehicle could be in an extreme over steering or under steering tendency due to unexpected accidents, road conditions, vehicle speed, or by other external factors. In such a case, this system automatically controls the engine output and the braking to each wheel, to decrease the extreme over steering and under steering.

* To decrease extreme over steering tendency

When the system determines that the over steering tendency is large, the system applies brakes to the outer wheels according to the degree of over steering, and crates a moment towards the outer side of the vehicle, to decrease the tendency of over steering. Also, when the brakes are applied, the vehicle speed decreases while the stability increases.

* To decrease extreme under steering tendency

When the system determines that the under steering tendency is large, the system applies brakes to the front or rear wheels according to the degree of under steering, to decrease the tendency of under steering.

* TRAC off SW

TRAC off SW is only for two-wheel drive models. Four-wheel drive models is needless this SW.

The SW to send the traction control system into OFF mode. When the SW is pushed after starting the engine, the system will be in OFF mode, and the TRAC OFF indicator light will turn on. When the SW is pushed again, the system will be in standby mode. When the engine is stopped and re-started, regardless of the TRAC off SW, the system will be in standby mode.

Information to the driver

The VSC system informs the driver when the tire grip is about to exceed its grip capacity, by blinking the slip indicator light and emiting an intermittent sound of the buzzer. Accordingly, the driver is informed to drive more gently.

## Service Hints

**S1 Skid Control ECU with Actuator**

31-Ground : Always approx. 12 volts
46-Ground : Approx. 12 volts with the ignition SW at ON or ST position
1, 32-Ground : Always continuity

**S14 Stop Light SW**

2-1 : Closed with the brake pedal depressed

**○ : Parts Location**

| Code | See Page | Code | See Page | Code | See Page |
|---|---|---|---|---|---|
| A4 | 36 (*1) | E6 A | 40 | J23 B | 41 |
| | 38 (*2) | E7 B | 40 | P3 | 41 |
| A6 | 36 (*1) | J2 | 41 | S1 | 37 (*1) |
| | 38 (*2) | J4 | 41 | | 39 (*2) |
| A7 | 36 (*1) | J7 | 41 | S11 | 41 |
| | 38 (*2) | J13 A | 41 | S14 | 41 |
| A32 | 42 | J14 B | 41 | T6 | 41 |
| A33 | 42 | J15 C | 41 | V8 | 41 |
| C7 A | 40 | J16 D | 41 | Y1 | 41 |
| C8 B | 40 | J17 E | 41 | | |
| D3 | 40 | J22 A | 41 | | |

**▭ : Relay Blocks**

| Code | See Page | Relay Blocks (Relay Block Location) |
|---|---|---|
| 1 | 22 | Engine Room R/B (Engine Compartment Left) |
| 2 | 23 | ABS R/B (Radiator Side Support LH) |

* 1 : 1MZ-FE, 3MZ-FE * 2 : 2AZ-FE * 3 : w/ Power Seat * 4 : w/o Power Seat

## : Junction Block and Wire Harness Connector

| Code | See Page | Junction Block and Wire Harness (Connector Location) |
|---|---|---|
| 1C | 25 | Engine Room Main Wire and Engine Room J/B (Engine Compartment Left) |
| 1E | | |
| 2B | 28 | Instrument Panel Wire and Driver Side J/B (Lower Finish Panel) |
| 2G | 28 | Engine Room Main Wire and Driver Side J/B (Lower Finish Panel) |
| 2L | 29 | Instrument Panel Wire and Driver Side J/B (Lower Finish Panel) |
| 2M | | |
| 2O | | |
| 2P | | |
| 2R | | |
| 2S | | |
| 3A | 34 | Instrument Panel Wire and Passenger Side J/B (Instrument Panel Brace RH) |
| 3B | | |

## : Connector Joining Wire Harness and Wire Harness

| Code | See Page | Joining Wire Harness and Wire Harness (Connector Location) |
|---|---|---|
| ID1 | 50 | Engine Room Main Wire and Floor Wire (Left Side of Driver Side J/B) |
| IF2 | 50 | Engine Room Main Wire and Instrument Panel Wire (Right Side of Steering Column Tube) |
| IF3 | | |
| IF4 | | |
| IL1 | 52 | Engine Wire and Instrument Panel Wire (Behind the Glove Box) |
| IL2 | | |
| IN2 | 52 | Instrument Panel Wire and Floor No.2 Wire (Right Kick Panel) |
| IO1 | 52 | Engine Room Main Wire and Engine Room Main Wire (Right Side of the Instrument Panel ) |

## : Ground Points

| Code | See Page | Ground Points Location |
|---|---|---|
| EA | 46 (*1) | Right Fender |
| | 48 (*2) | |
| EB | 46 (*1) | |
| | 48 (*2) | |
| ED | 46 (*1) | Left Fender |
| | 48 (*2) | |
| II | 50 | Cowl Side Panel LH |
| IJ | 50 | Instrument Panel Brace LH |
| IK | | |
| IM | 50 | Instrument Panel Reinforcement RH |

## : Splice Points

| Code | See Page | Wire Harness with Splice Points | Code | See Page | Wire Harness with Splice Points |
|---|---|---|---|---|---|
| E3 | 46 (*1) | Engine Room Main Wire | E3 | 48 (*2) | Engine Room Main Wire |

* 1 : 1MZ-FE, 3MZ-FE * 2 : 2AZ-FE * 3 : w/ Power Seat * 4 : w/o Power Seat

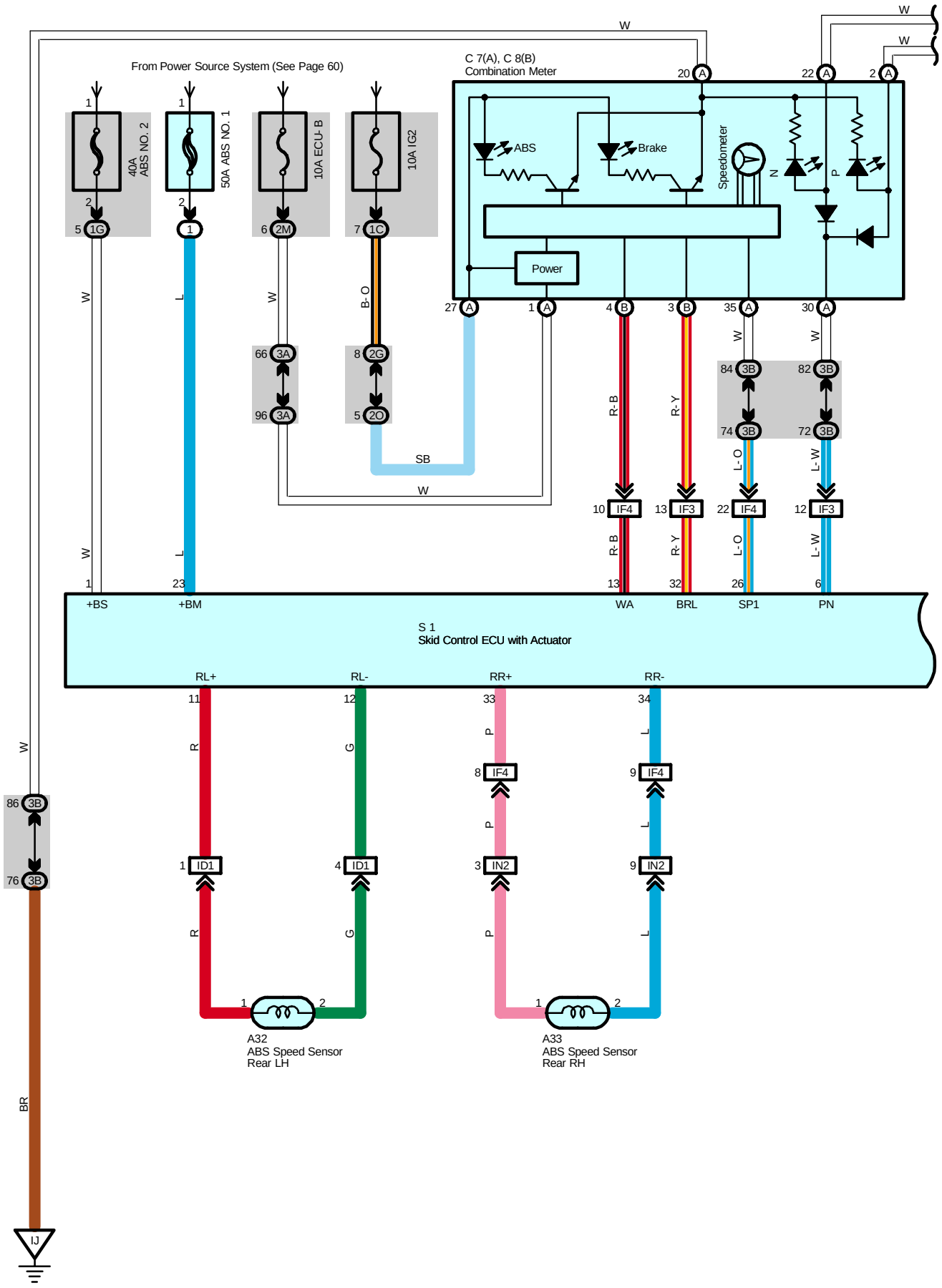
From Power Source System (See Page 60)
C 7(A), C 8(B)
Combination Meter
40A ABS NO. 2
50A ABS NO. 1
10A ECU-B
10A IG2
ABS
Brake
Speedometer
Power
+BS
+BM
WA
BRL
SP1
PN
S 1
Skid Control ECU with Actuator
RL+
RL-
RR+
RR-
A32
ABS Speed Sensor
Rear LH
A33
ABS Speed Sensor
Rear RH
IJ

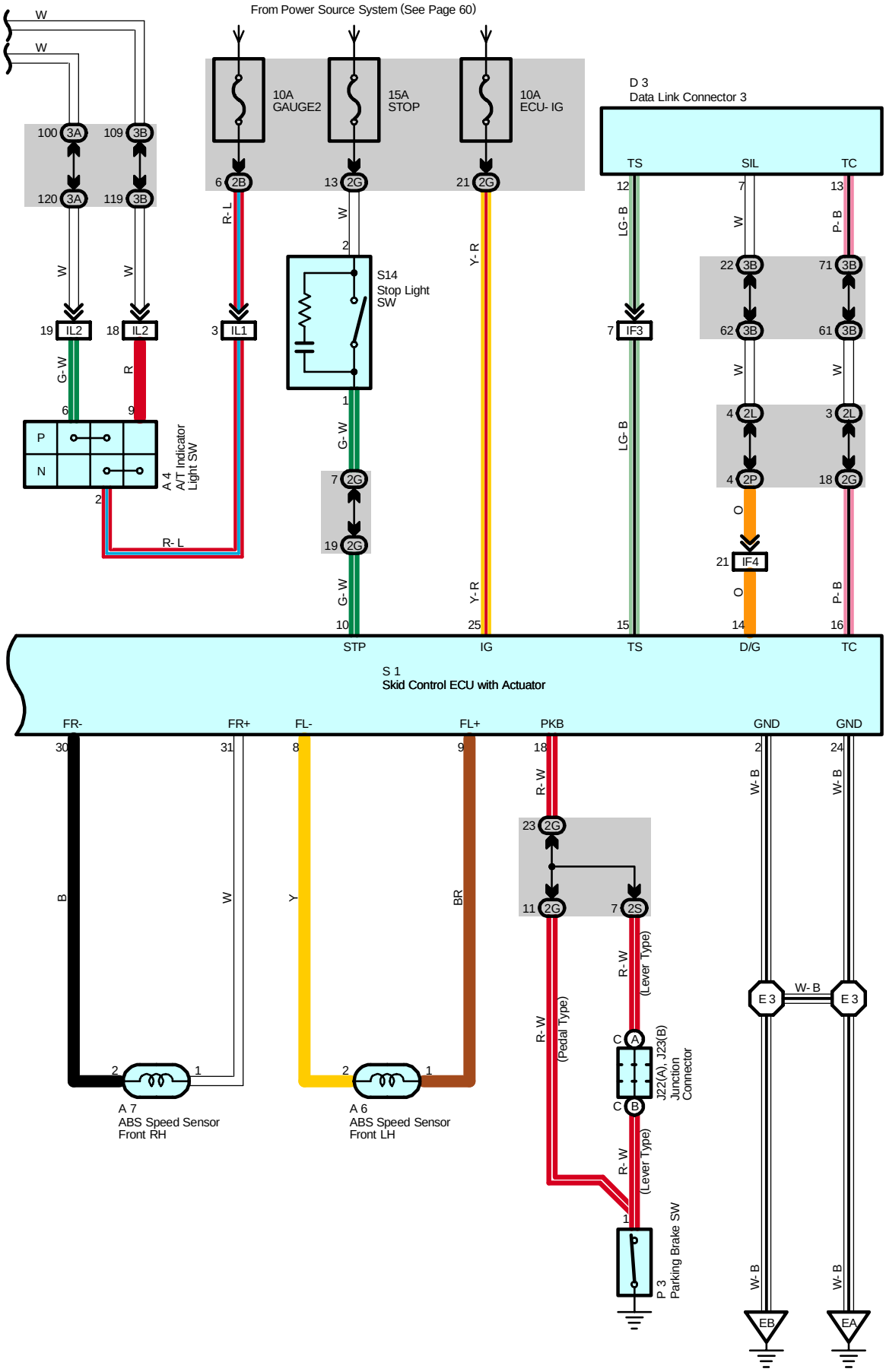
From Power Source System (See Page 60)
W
W
100 3A
109 3B
120 3A
119 3B
10A GAUGE2
15A STOP
10A ECU- IG
6 2B
13 2G
21 2G
D 3
Data Link Connector 3
TS
SIL
TC
12
7
13
LG- B
W
P- B
22 3B
71 3B
62 3B
61 3B
19 IL2
18 IL2
3 IL1
7 IF3
R- L
W
W
W
W
G- W
R
S14
Stop Light SW
Y- R
LG- B
4 2L
3 2L
6
9
1
4 2P
18 2G
O
21 IF4
A 4
A/T Indicator Light SW
P
N
2
R- L
7 2G
19 2G
G- W
Y- R
O
P- B
10
25
15
14
16
STP
IG
TS
D/G
TC
S 1
Skid Control ECU with Actuator
FR-
FR+
FL-
FL+
PKB
GND
GND
30
31
8
9
18
2
24
B
W
Y
BR
R- W
W- B
W- B
23 2G
11 2G
7 2S
R- W
(Lever Type)
E 3
W- B
E 3
C A
C B
J22(A), J23(B) Junction Connector
R- W
(Pedal Type)
R- W
(Lever Type)
1
2
1
2
1
2
A 7
ABS Speed Sensor Front RH
A 6
ABS Speed Sensor Front LH
P 3
Parking Brake SW
W- B
W- B
EB
EA

# ABS (TMC Made)

## System Outline

This system controls the respective brake fluid pressures acting on the disc brake cylinders of the right front wheel, left front wheel and rear wheels when the brakes are applied in a panic stop so that the wheels do not lock. This results in improved directional stability and steerability during panic braking.

**1. Input Signals**

(1) Speed sensor signal

The speed of the wheels is detected and input to TERMINALS 9, 11, 31 and 33 of the skid control ECU with actuator.

(2) Stop light SW signal

A signal is input to TERMINAL 10 of the skid control ECU with actuator when the brake pedal is depressed.

**2. System Operation**

During sudden braking the skid control ECU with actuator has signals input from each sensor, which controls the current to the solenoid inside the actuator and lets the hydraulic pressure acting on each wheel cylinder escape to the reservoir. The pump inside the actuator is also operating at this time and it returns the brake fluid from the reservoir to the master cylinder, thus preventing locking of the vehicle wheels.

If the skid control ECU with actuator judges that the hydraulic pressure acting on the wheel cylinder is insufficient, the current on the solenoid is controlled and the hydraulic pressure is increased. Holding of the hydraulic pressure is also controlled by the skid control ECU with actuator, by the same method as above. Pressure reduction, holding and increase are repeated to maintain vehicle stability and to improve steerability during sudden braking.

## Service Hints

**A6, A7 ABS Speed Sensor Front LH, RH**

2-1 : Approx. 1.6 kΩ

**A32, A33 ABS Speed Sensor Rear LH, RH**

2-1 : Approx. 2.2 kΩ

**S1 Skid Control ECU with Actuator**

2, 24-Ground : Always continuity

25-Ground : Approx. 12 volts with the ignition SW at ON or ST position

10-Ground : Approx. 12 volts with the brake pedal depressed

1, 23-Ground : Always approx. 12 volts

**: Parts Location**

| Code | See Page | Code | See Page | Code | See Page |
|---|---|---|---|---|---|
| A4 | 36 (*1) | A32 | 42 | J23 B | 41 |
| | 38 (*2) | A33 | 42 | P3 | 41 |
| A6 | 36 (*1) | C7 A | 40 | S1 | 37 (*1) |
| | 38 (*2) | C8 B | 40 | | 39 (*2) |
| A7 | 36 (*1) | D3 | 40 | S14 | 41 |
| | 38 (*2) | J22 A | 41 | | |

**: Relay Blocks**

| Code | See Page | Relay Blocks (Relay Block Location) |
|---|---|---|
| 1 | 22 | Engine Room R/B (Engine Compartment Left) |

* 1 : 1MZ-FE, 3MZ-FE * 2 : 2AZ-FE * 3 : w/ Power Seat * 4 : w/o Power Seat

### : Junction Block and Wire Harness Connector

| Code | See Page | Junction Block and Wire Harness (Connector Location) |
|---|---|---|
| 1C | 25 | Engine Room Main Wire and Engine Room J/B (Engine Compartment Left) |
| 1G | | |
| 2B | 28 | Instrument Panel Wire and Driver Side J/B (Lower Finish Panel) |
| 2G | 28 | Engine Room Main Wire and Driver Side J/B (Lower Finish Panel) |
| 2L | 29 | Instrument Panel Wire and Driver Side J/B (Lower Finish Panel) |
| 2M | | |
| 2O | | |
| 2P | | |
| 2S | | |
| 3A | 34 | Instrument Panel Wire and Passenger Side J/B (Instrument Panel Brace RH) |
| 3B | | |

### : Connector Joining Wire Harness and Wire Harness

| Code | See Page | Joining Wire Harness and Wire Harness (Connector Location) |
|---|---|---|
| ID1 | 50 | Engine Room Main Wire and Floor Wire (Left Side of Driver Side J/B) |
| IF3 | 50 | Engine Room Main Wire and Instrument Panel Wire (Right Side of Steering Column Tube) |
| IF4 | | |
| IL1 | 52 | Engine Wire and Instrument Panel Wire (Behind the Glove Box) |
| IL2 | | |
| IN2 | 52 | Instrument Panel Wire and Floor No.2 Wire (Right Kick Panel) |

### : Ground Points

| Code | See Page | Ground Points Location |
|---|---|---|
| EA | 46 (*1) | Right Fender |
| | 48 (*2) | |
| EB | 46 (*1) | |
| | 48 (*2) | |
| IJ | 50 | Instrument Panel Brace LH |

### : Splice Points

| Code | See Page | Wire Harness with Splice Points | Code | See Page | Wire Harness with Splice Points |
|---|---|---|---|---|---|
| E3 | 46 (*1) | Engine Room Main Wire | E3 | 48 (*2) | Engine Room Main Wire |

* 1 : 1MZ-FE, 3MZ-FE * 2 : 2AZ-FE * 3 : w/ Power Seat * 4 : w/o Power Seat

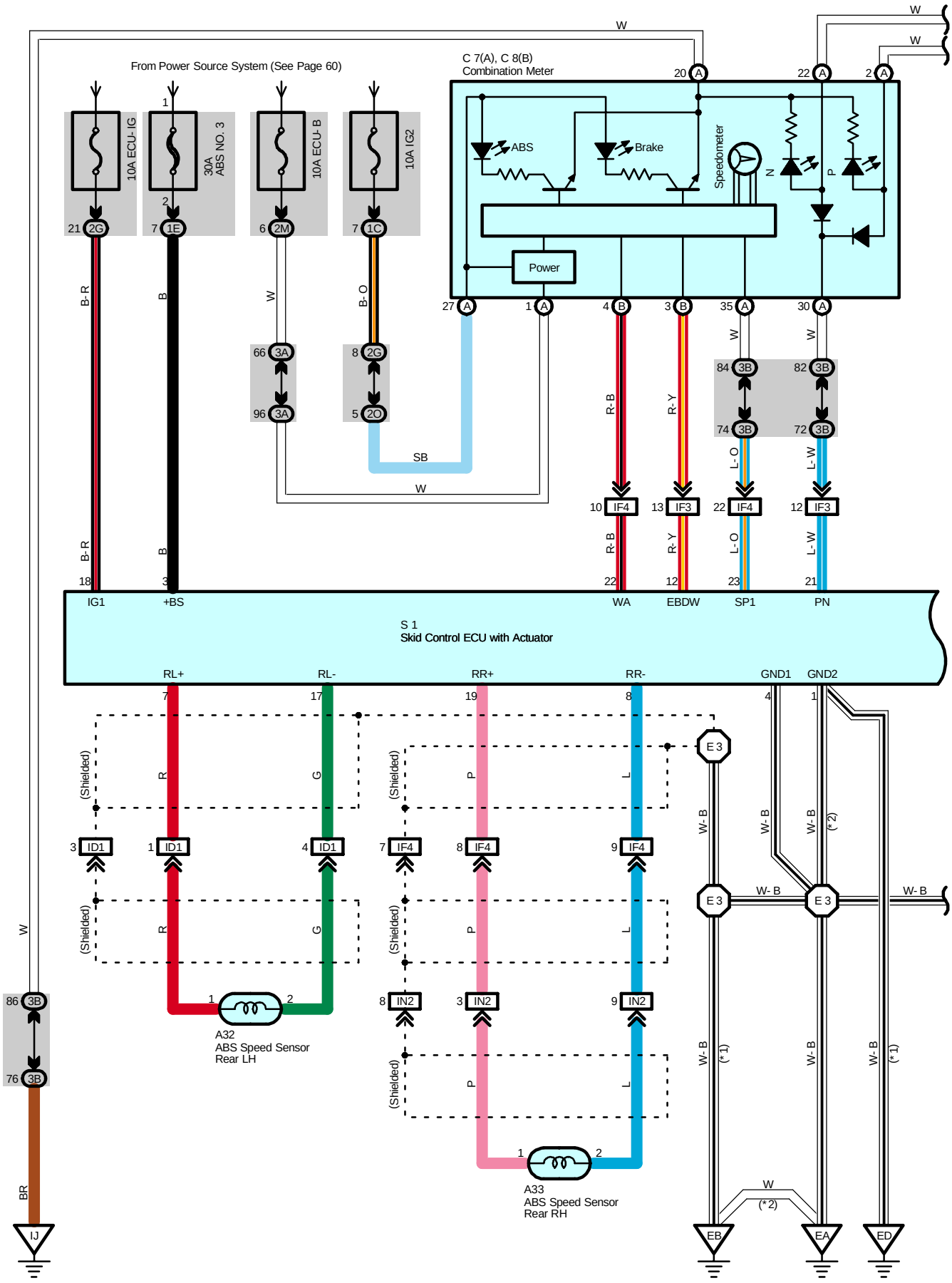
From Power Source System (See Page 60)
C 7(A), C 8(B)
Combination Meter
10A ECU-IG
30A ABS NO. 3
10A ECU-B
10A IG2
ABS
Brake
Speedometer
Power
IG1
+BS
WA
EBDW
SP1
PN
S 1
Skid Control ECU with Actuator
RL+
RL-
RR+
RR-
GND1
GND2
A32
ABS Speed Sensor
Rear LH
A33
ABS Speed Sensor
Rear RH
(Shielded)
IJ
EB
EA
ED

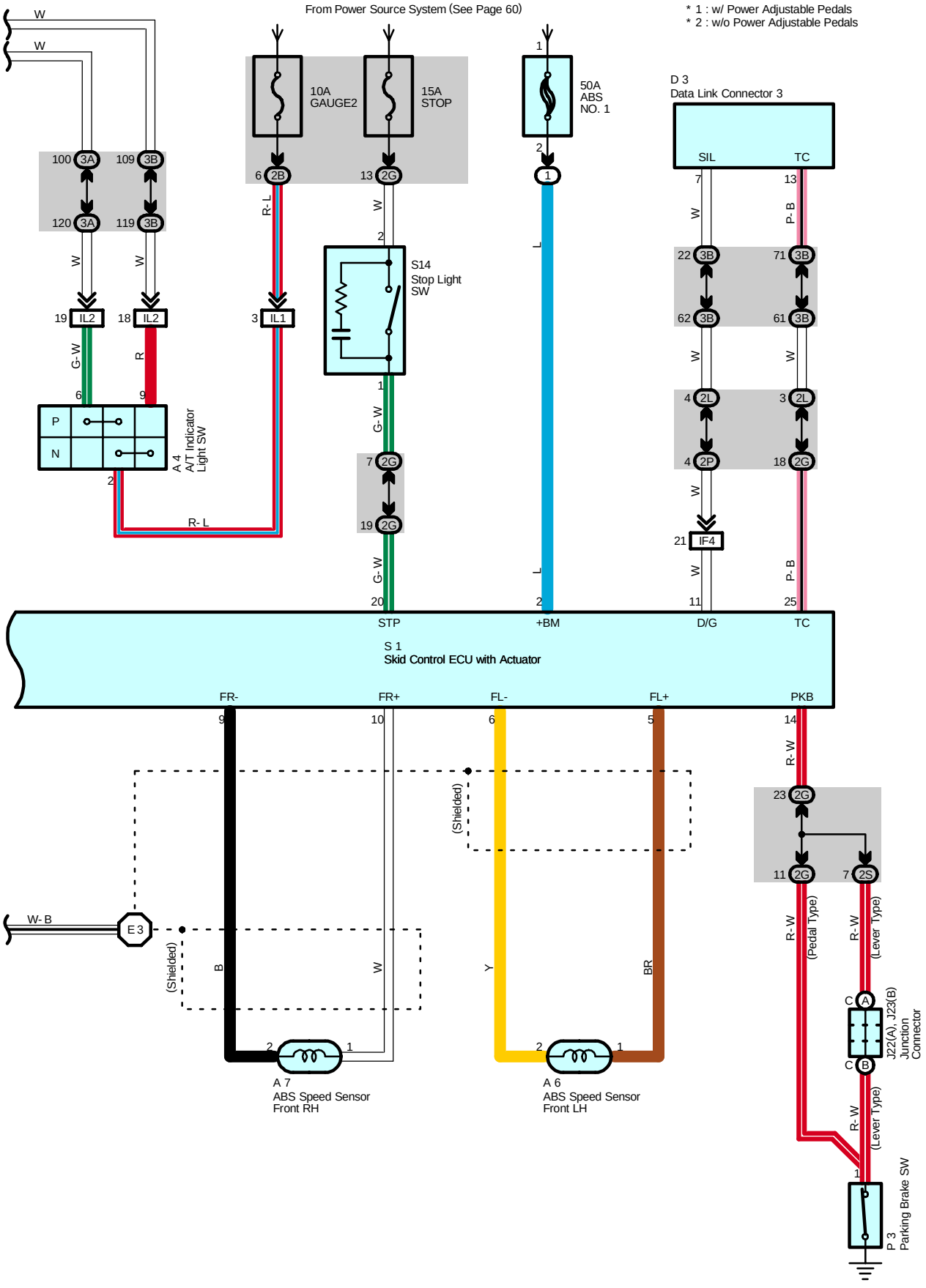
From Power Source System (See Page 60)
* 1 : w/ Power Adjustable Pedals
* 2 : w/o Power Adjustable Pedals
10A GAUGE2
15A STOP
50A ABS NO. 1
D 3
Data Link Connector 3
SIL
TC
S14
Stop Light SW
A 4
A/T Indicator Light SW
STP
+BM
D/G
TC
S 1
Skid Control ECU with Actuator
FR-
FR+
FL-
FL+
PKB
(Shielded)
(Pedal Type)
(Lever Type)
J22(A), J23(B) Junction Connector
A 7
ABS Speed Sensor Front RH
A 6
ABS Speed Sensor Front LH
P 3
Parking Brake SW

# ABS (TMMK Made)

## System Outline

This system controls the respective brake fluid pressures acting on the disc brake cylinders of the right front wheel, left front wheel and rear wheels when the brakes are applied in a panic stop so that the wheels do not lock. This results in improved directional stability and steerability during panic braking.

**1. Input Signals**

(1) Speed sensor signal

The speed of the wheels is detected and input to TERMINALS 5, 7, 10 and 19 of the skid control ECU with actuator.

(2) Stop light SW signal

A signal is input to TERMINAL 20 of the skid control ECU with actuator when the brake pedal is depressed.

**2. System Operation**

During sudden braking the skid control ECU with actuator has signals input from each sensor, which controls the current to the solenoid inside the actuator and lets the hydraulic pressure acting on each wheel cylinder escape to the reservoir. The pump inside the actuator is also operating at this time and it returns the brake fluid from the reservoir to the master cylinder, thus preventing locking of the vehicle wheels.

If the skid control ECU with actuator judges that the hydraulic pressure acting on the wheel cylinder is insufficient, the current on the solenoid is controlled and the hydraulic pressure is increased. Holding of the hydraulic pressure is also controlled by the skid control ECU with actuator, by the same method as above. Pressure reduction, holding and increase are repeated to maintain vehicle stability and to improve steerability during sudden braking.

## Service Hints

**A6, A7 ABS Speed Sensor Front LH, RH**

2-1 : Approx. 1.07 kΩ

**A32, A33 ABS Speed Sensor Rear LH, RH**

2-1 : Approx. 2.2 kΩ

**S1 Skid Control ECU with Actuator**

1, 4-Ground : Always continuity

2-Ground : Approx. 12 volts with the ignition SW at ON position

20-Ground : Approx. 12 volts with the brake pedal depressed

3, 18-Ground : Always approx. 12 volts

**○ : Parts Location**

| Code | See Page | Code | See Page | Code | See Page |
|---|---|---|---|---|---|
| A4 | 36 (*1) | A32 | 42 | J23 B | 41 |
| | 38 (*2) | A33 | 42 | P3 | 41 |
| A6 | 36 (*1) | C7 A | 40 | S1 | 37 (*1) |
| | 38 (*2) | C8 B | 40 | | 39 (*2) |
| A7 | 36 (*1) | D3 | 40 | S14 | 41 |
| | 38 (*2) | J22 A | 41 | | |

**▭ : Relay Blocks**

| Code | See Page | Relay Blocks (Relay Block Location) |
|---|---|---|
| 1 | 22 | Engine Room R/B (Engine Compartment Left) |

* 1 : 1MZ-FE, 3MZ-FE * 2 : 2AZ-FE * 3 : w/ Power Seat * 4 : w/o Power Seat

### : Junction Block and Wire Harness Connector

| Code | See Page | Junction Block and Wire Harness (Connector Location) |
|---|---|---|
| 1C | 25 | Engine Room Main Wire and Engine Room J/B (Engine Compartment Left) |
| 1E | | |
| 2B | 28 | Instrument Panel Wire and Driver Side J/B (Lower Finish Panel) |
| 2G | 28 | Engine Room Main Wire and Driver Side J/B (Lower Finish Panel) |
| 2L | 29 | Instrument Panel Wire and Driver Side J/B (Lower Finish Panel) |
| 2M | | |
| 2O | | |
| 2P | | |
| 2S | | |
| 3A | 34 | Instrument Panel Wire and Passenger Side J/B (Instrument Panel Brace RH) |
| 3B | | |

### : Connector Joining Wire Harness and Wire Harness

| Code | See Page | Joining Wire Harness and Wire Harness (Connector Location) |
|---|---|---|
| ID1 | 50 | Engine Room Main Wire and Floor Wire (Left Side of Driver Side J/B) |
| IF3 | 50 | Engine Room Main Wire and Instrument Panel Wire (Right Side of Steering Column Tube) |
| IF4 | | |
| IL1 | 52 | Engine Wire and Instrument Panel Wire (Behind the Glove Box) |
| IL2 | | |
| IN2 | 52 | Instrument Panel Wire and Floor No.2 Wire (Right Kick Panel) |

### : Ground Points

| Code | See Page | Ground Points Location |
|---|---|---|
| EA | 46 (*1) | Right Fender |
| | 48 (*2) | |
| EB | 46 (*1) | |
| | 48 (*2) | |
| ED | 46 (*1) | Left Fender |
| | 48 (*2) | |
| IJ | 50 | Instrument Panel Brace LH |

### : Splice Points

| Code | See Page | Wire Harness with Splice Points | Code | See Page | Wire Harness with Splice Points |
|---|---|---|---|---|---|
| E3 | 46 (*1) | Engine Room Main Wire | E3 | 48 (*2) | Engine Room Main Wire |

* 1 : 1MZ-FE, 3MZ-FE * 2 : 2AZ-FE * 3 : w/ Power Seat * 4 : w/o Power Seat

## Memo

NOTICE: When inspecting or repairing the SRS, perform service in accordance with the following precautionary instructions and the procedure, and precautions in the Repair Manual applicable for the model year.

- Malfunction symptoms of the SRS are difficult to confirm, so the DTCs become the most important source of information when troubleshooting. When troubleshooting the SRS, always inspect the DTCs before disconnecting the battery.
- **Work must be started more than 90 seconds after the ignition SW is turned to the "LOCK" position and the negative (-) terminal cable is disconnected from the battery.**
  **(The SRS is equipped with a back-up power source so that if work is started within 90 seconds from disconnecting the negative (-) terminal cable of the battery, the SRS may deploy.)**
- When the negative (-) terminal cable is disconnected from the battery, the memory of the clock and audio system will be cleared. So before starting work, make a record of the contents in the audio memory system. When work is finished, reset the audio systems as they were before and adjust the clock. Some vehicles have power tilt steering, power telescopic steering, power seat and power outside rear view mirror which are all equipped with memory function. However, it is not possible to make a record of these memory contents. So when the work is finished, it will be necessary to explain it to your customer, and ask the customer to adjust the features and reset the memory. To avoid erasing the memory in each system, never use a back-up power supply from outside the vehicle.
- Before repair, remove the airbag sensor if shocks are likely to be applied to the sensor during repair.
- Do not expose the following parts directly to hot air or flame;
- Even in cases of a minor collision where the SRS does not deploy, the following parts should be inspected;
- Never use SRS parts from another vehicle. When replacing parts, replace with new parts.
- For the purpose of reuse, never disassemble and repair the following parts.
- If the following parts have been dropped, or have cracks, dents and other defects in their case, bracket, and connector, replace with new one.
- Use a volt/ohmmeter with high impedance (10 kΩ/V minimum) for troubleshooting electrical circuits of the system.
- Information labels are attached to the periphery of the SRS components. Follow the instructions of the notice.
- After work on the SRS is completed, check the SRS warning light.
- If the vehicle is equipped with a mobile communication system, refer to the precaution in the IN section of the Repair Manual.

* Steering wheel pad
* Front passenger airbag assembly
* Side airbag assembly
* Curtain shield airbag assembly
* Seat belt pretensioner
* Center airbag sensor assembly
* Front airbag sensor assembly
* Side airbag sensor assembly

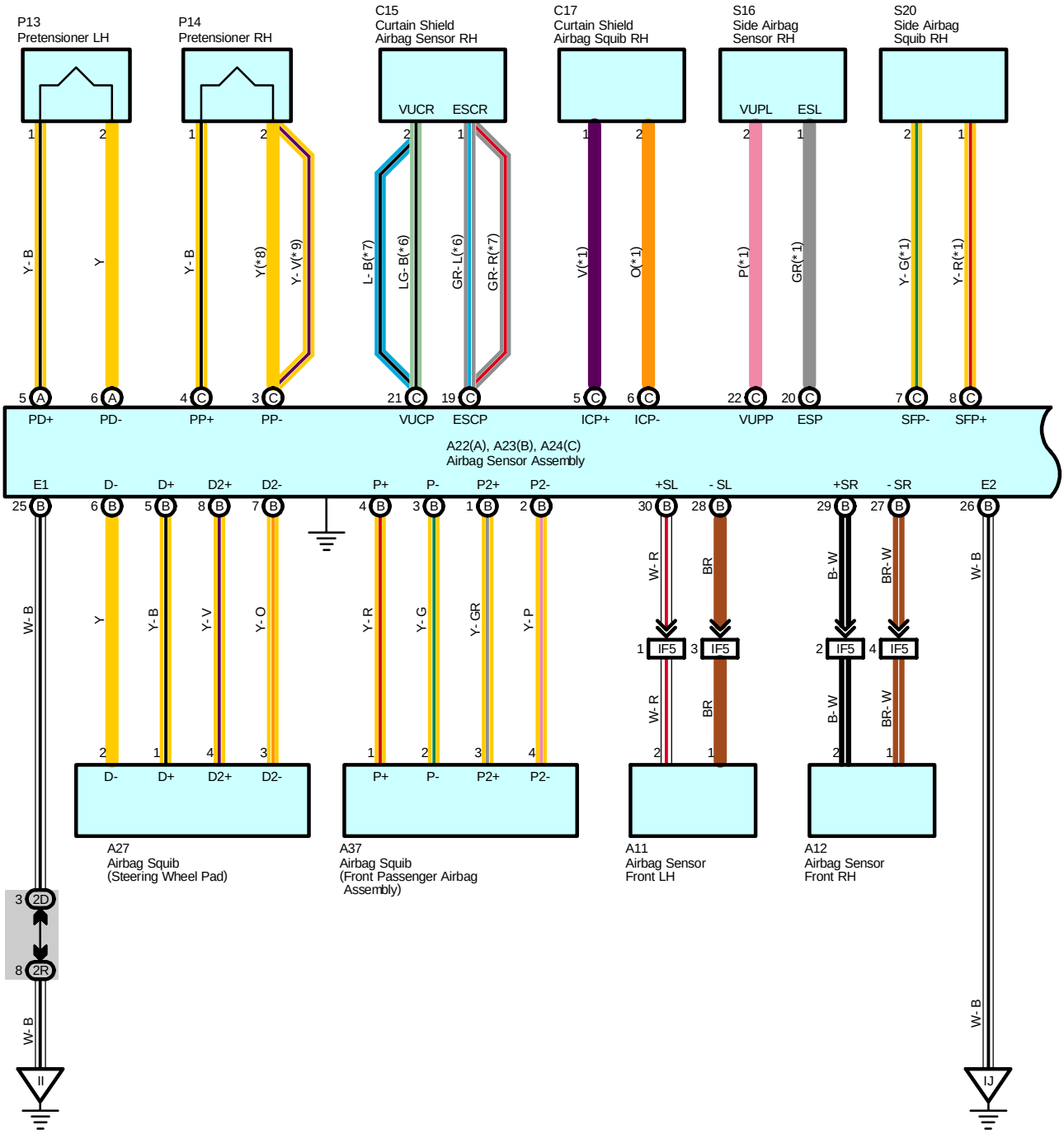
P13
Pretensioner LH
P14
Pretensioner RH
C15
Curtain Shield
Airbag Sensor RH
C17
Curtain Shield
Airbag Squib RH
S16
Side Airbag
Sensor RH
S20
Side Airbag
Squib RH
VUCR
ESCR
VUPL
ESL
Y- B
Y
Y- B
Y(*8)
Y- V(*9)
L- B(*7)
LG- B(*6)
GR- L(*6)
GR- R(*7)
V(*1)
O(*1)
P(*1)
GR(*1)
Y- G(*1)
Y- R(*1)
PD+
PD-
PP+
PP-
VUCP
ESCP
ICP+
ICP-
VUPP
ESP
SFP-
SFP+
A22(A), A23(B), A24(C)
Airbag Sensor Assembly
E1
D-
D+
D2+
D2-
P+
P-
P2+
P2-
+SL
- SL
+SR
- SR
E2
W- B
Y
Y- B
Y- V
Y- O
Y- R
Y- G
Y- GR
Y- P
W- R
BR
B- W
BR- W
IF5
A27
Airbag Squib
(Steering Wheel Pad)
A37
Airbag Squib
(Front Passenger Airbag
Assembly)
A11
Airbag Sensor
Front LH
A12
Airbag Sensor
Front RH
2D
2R
II
IJ

* 1 : w/ Curtain Shield Airbag
* 2 : 1MZ- FE, 3MZ- FE
* 3 : 2AZ- FE
* 4 : w/ Power Seat
* 5 : w/o Power Seat
* 6 : TMC Made w/ Curtain Shield Airbag
* 7 : TMMK Made w/ Curtain Shield Airbag
* 8 : TMC Made
* 9 : TMMK Made

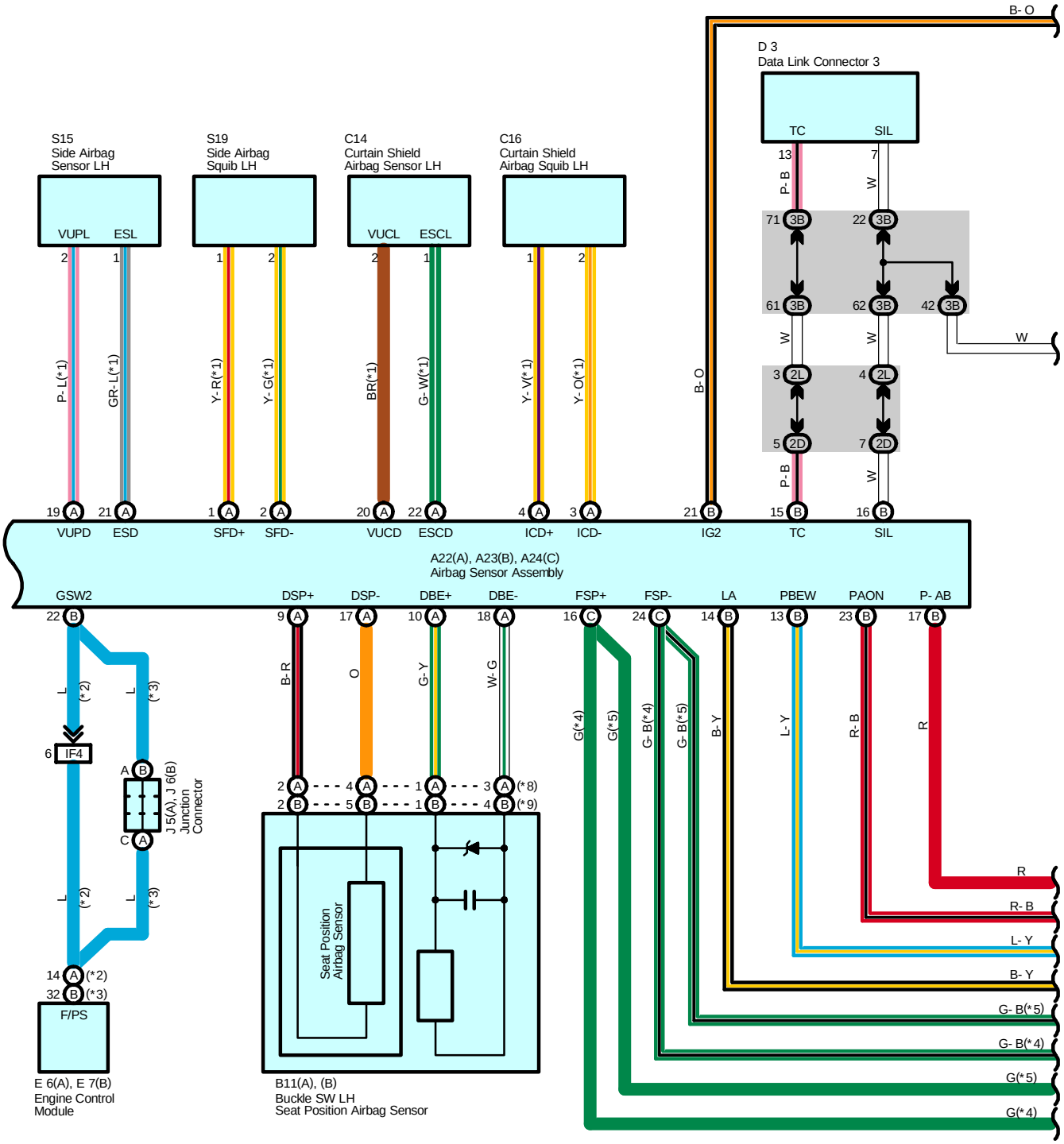

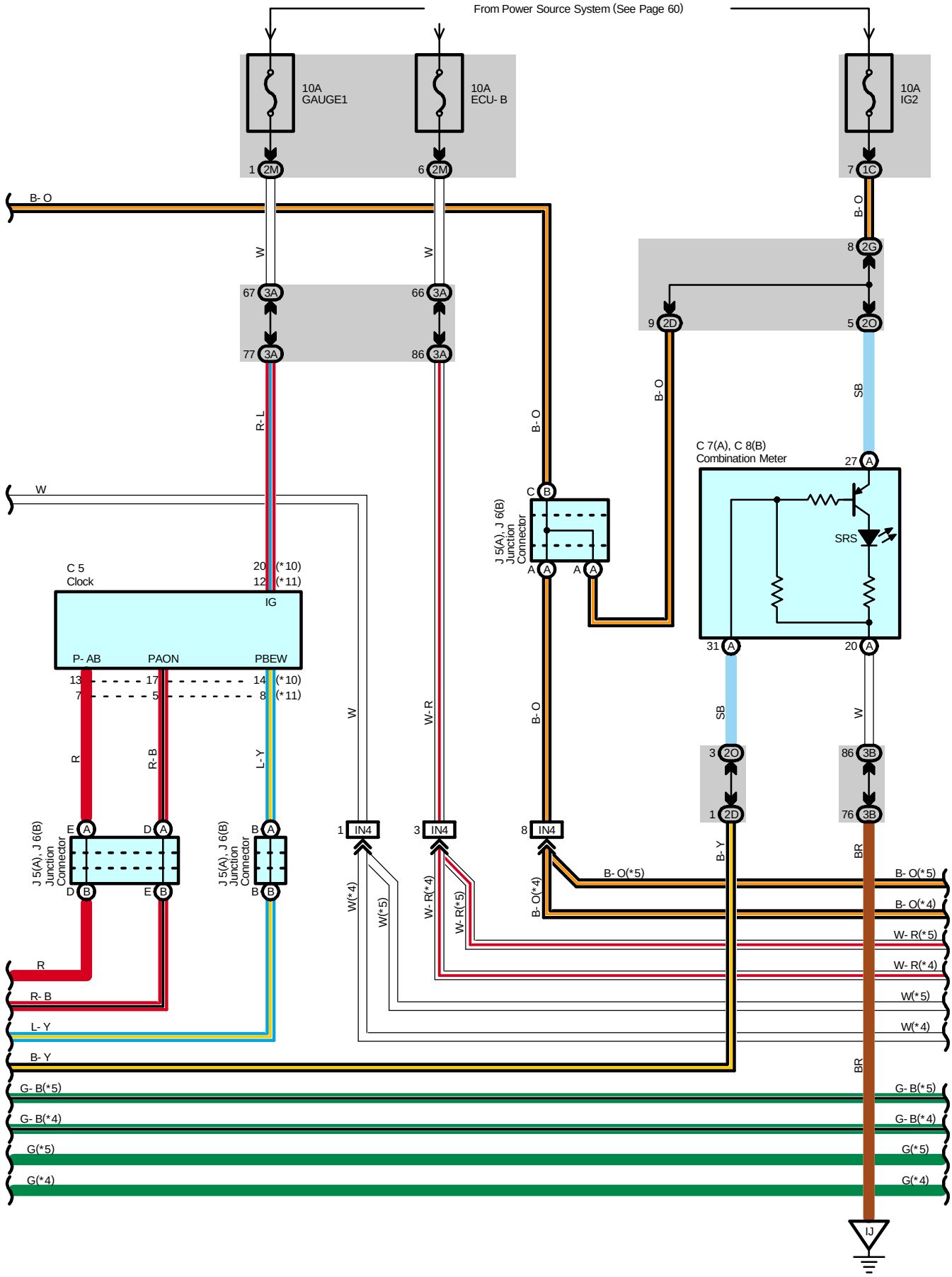
From Power Source System (See Page 60)
10A GAUGE1
10A ECU- B
10A IG2
1 2M
6 2M
7 1C
B- O
W
8 2G
67 3A
66 3A
9 2D
5 2O
77 3A
86 3A
R- L
B- O
SB
C 7(A), C 8(B) Combination Meter
27 A
C 5 Clock
20 (*10)
12 (*11)
IG
P- AB
PAON
PBEW
13
17
14 (*10)
7
5
8 (*11)
SRS
31 A
20 A
W
W- R
SB
W
R
R- B
L- Y
3 2O
86 3B
1 2D
76 3B
B- Y
BR
J 5(A), J 6(B) Junction Connector
1 IN4
3 IN4
8 IN4
B- O(*5)
B- O(*4)
W(*4)
W(*5)
W- R(*4)
W- R(*5)
R
R- B
L- Y
B- Y
G- B(*5)
G- B(*4)
G(*5)
G(*4)
IJ

* 4 : w/ Power Seat
* 5 : w/o Power Seat
*10 : Automatic A/C
*11 : Manual A/C
*12 : TMC Made w/ Power Seat
*13 : TMMK Made w/ Power Seat

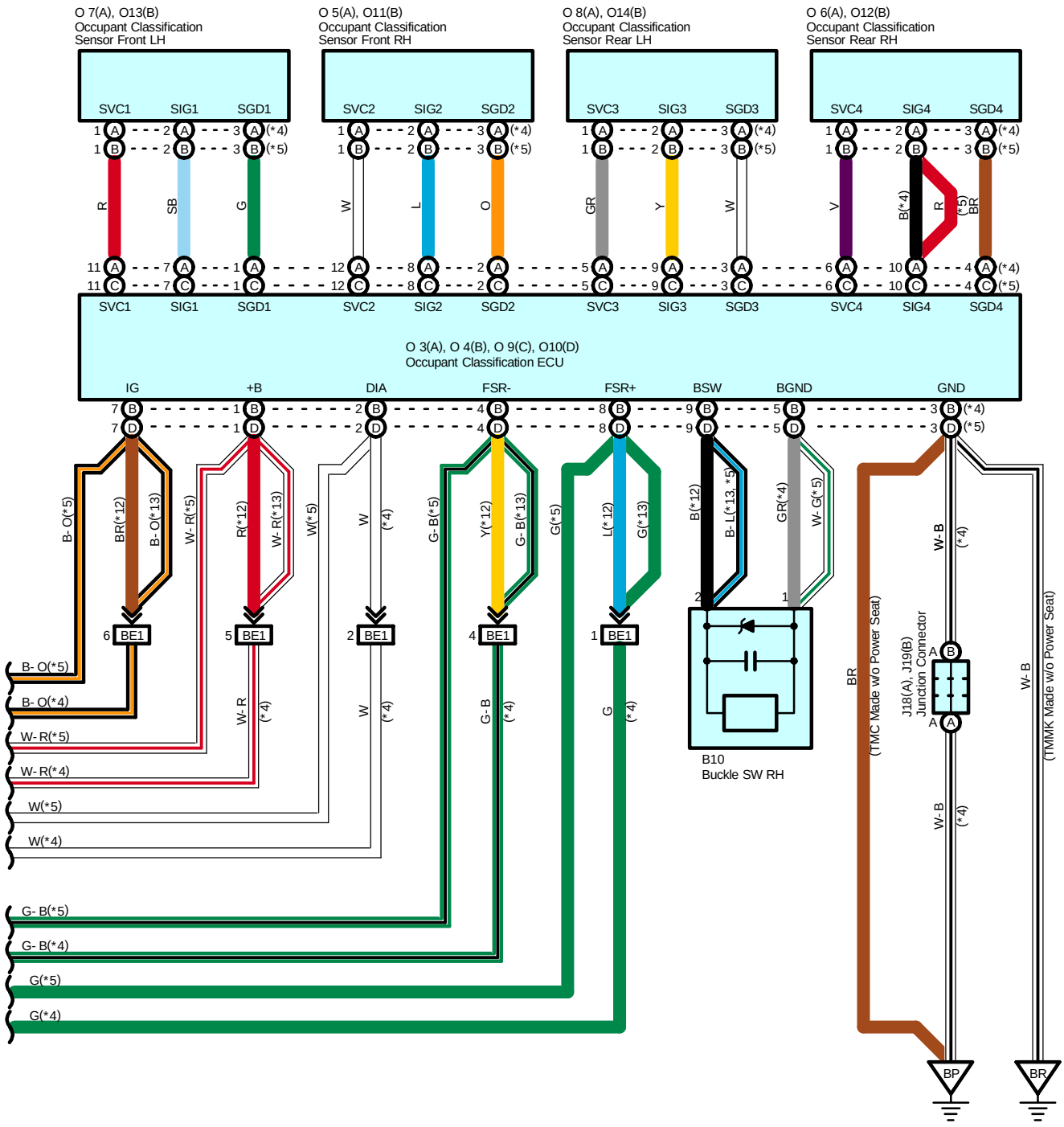

### System Outline

The SRS is a driver and front passenger protection device which has a supplemental role to the seat belts.
When the ignition SW is turned to ON, the current from the IG2 fuse to TERMINAL (B) 21 of the airbag sensor assembly.
If an accident occurs while driving, when the frontal impact exceeds a set level, the current from the IG2 fuse flows to TERMINALS (B) 5, (B) 8, (B) 4, (B) 1, (A) 5 and (C) 4 of the airbag sensor assembly to the airbag squibs and the pretensioners to TERMINALS (B) 6, (B) 7, (B) 3, (B) 2, (A) 6 and (C) 3 of the airbag sensor assembly to TERMINAL (B) 25, (B) 26 or BODY GROUND to GROUND, so that current flows to the airbag squibs and the pretensioners and causes them to operate.
When the side impact also exceeds a set level, the current from the IG2 fuse flows to TERMINALS (A) 1, (C) 8, (A) 4 and (C) 5 of the airbag sensor assembly to the side airbag squibs and the curtain shield airbag squibs TERMINALS (A) 2, (C) 7, (A) 3 and (C) 6 of the airbag sensor assembly to TERMINAL (B) 25, (B) 26 or BODY GROUND to GROUND, causing side airbag squibs and curtain shield airbag squibs to operate.
The airbag stored inside the steering wheel pad is instantaneously expanded to soften the shock to the driver.
The airbag stored inside the passenger's instrument panel is instantaneously expanded to soften the shock to the front passenger.
Side airbags are instantaneously expanded to soften the shock of side to the driver and front passenger.
The curtain shield airbag can ease an impact on the head of the front and rear passengers and reduce risks of injury.
The pretensioners make sure of the seat belt restrainability.
If occupant classification ECU detects the presence of a child in the front passenger seat, it prohibits the deployment of the SRS airbag to prevent the child from being injured by the airbag.

### ○ : Parts Location

| Code | See Page | Code | See Page | Code | See Page |
|---|---|---|---|---|---|
| A11 | 36 (*1) | C8 B | 40 | O8 A | 44 (*3) |
| | 38 (*2) | C14 | 42 | O9 C | 45 (*4) |
| A12 | 36 (*1) | C15 | 42 | O10 D | 45 (*4) |
| | 38 (*2) | C16 | 42 | O11 B | 45 (*4) |
| A22 A | 40 | C17 | 42 | O12 B | 45 (*4) |
| A23 B | 40 | D3 | 40 | O13 B | 45 (*4) |
| A24 C | 40 | E6 A | 40 | O14 B | 45 (*4) |
| A27 | 40 | E7 B | 40 | P13 | 43 |
| A37 | 40 | J5 A | 41 | P14 | 43 |
| B10 | 44 (*3) | J6 B | 41 | S15 | 43 |
| | 45 (*4) | J18 A | 44 (*3) | S16 | 43 |
| B11 A | 44 (*3) | J19 B | 44 (*3) | S19 | 44 (*3) |
| | 45 (*4) | O3 A | 44 (*3) | | 45 (*4) |
| B11 B | 44 (*3) | O4 B | 44 (*3) | S20 | 44 (*3) |
| | 45 (*4) | O5 A | 44 (*3) | | 45 (*4) |
| C5 | 40 | O6 A | 44 (*3) | | |
| C7 A | 40 | O7 A | 44 (*3) | | |

### ⬭ : Junction Block and Wire Harness Connector

| Code | See Page | Junction Block and Wire Harness (Connector Location) |
|---|---|---|
| 1C | 25 | Engine Room Main Wire and Engine Room J/B (Engine Compartment Left) |
| 2D | 28 | Instrument Panel Wire and Driver Side J/B (Lower Finish Panel) |
| 2G | 28 | Engine Room Main Wire and Driver Side J/B (Lower Finish Panel) |
| 2L | 29 | Instrument Panel Wire and Driver Side J/B (Lower Finish Panel) |
| 2M | | |
| 2O | | |
| 2R | | |
| 3A | 34 | Instrument Panel Wire and Passenger Side J/B (Instrument Panel Brace RH) |
| 3B | | |

* 1 : 1MZ-FE, 3MZ-FE  * 2 : 2AZ-FE  * 3 : w/ Power Seat  * 4 : w/o Power Seat

: **Connector Joining Wire Harness and Wire Harness**

| Code | See Page | Joining Wire Harness and Wire Harness (Connector Location) |
|---|---|---|
| IF4 | 50 | Engine Room Main Wire and Instrument Panel Wire (Right Side of Steering Column Tube) |
| IF5 | | |
| IN4 | 52 | Instrument Panel Wire and Floor No.2 Wire (Right Kick Panel) |
| BE1 | 56 | Floor No.2 Wire and Front Seat RH Wire (Under the Front Passenger's Seat) |

: **Ground Points**

| Code | See Page | Ground Points Location |
|---|---|---|
| II | 50 | Cowl Side Panel LH |
| IJ | 50 | Instrument Panel Brace LH |
| BP | 54 | Under the Front Passenger's Seat |
| BR | 54 | Front Side of Rear Quarter Wheel House RH |

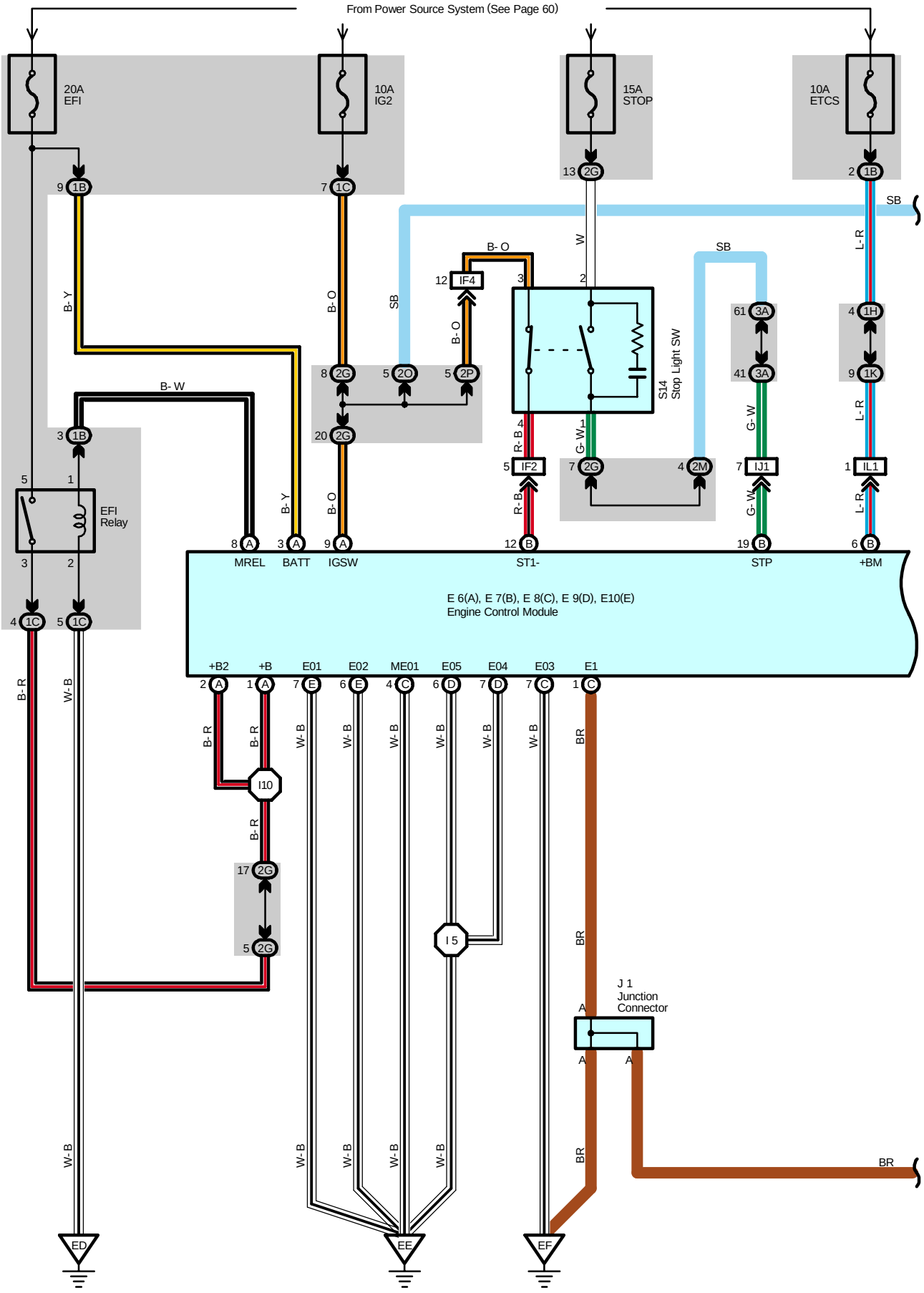
From Power Source System (See Page 60)
20A EFI
10A IG2
15A STOP
10A ETCS
EFI Relay
S14 Stop Light SW
J 1 Junction Connector
E 6(A), E 7(B), E 8(C), E 9(D), E10(E) Engine Control Module
MREL
BATT
IGSW
ST1-
STP
+BM
+B2
+B
E01
E02
ME01
E05
E04
E03
E1
ED
EE
EF

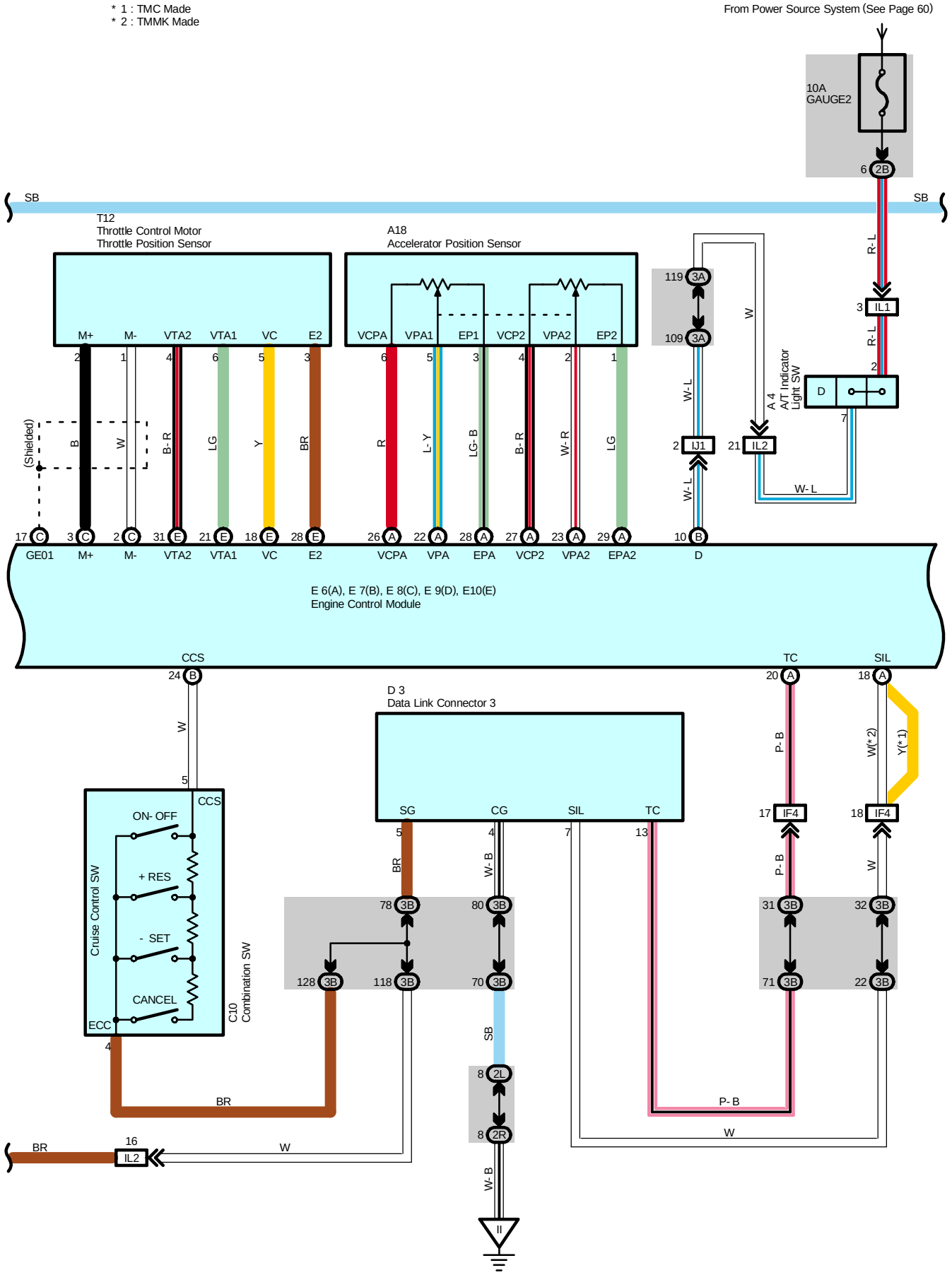
* 1 : TMC Made
* 2 : TMMK Made
From Power Source System (See Page 60)
10A
GAUGE2
SB
SB
T12
Throttle Control Motor
Throttle Position Sensor
A18
Accelerator Position Sensor
M+
M-
VTA2
VTA1
VC
E2
VCPA
VPA1
EP1
VCP2
VPA2
EP2
(Shielded)
B
W
B-R
LG
Y
BR
R
L-Y
LG-B
B-R
W-R
LG
R-L
W
W-L
A 4
A/T Indicator
Light SW
D
W-L
W-L
GE01
M+
M-
VTA2
VTA1
VC
E2
VCPA
VPA
EPA
VCP2
VPA2
EPA2
D
E 6(A), E 7(B), E 8(C), E 9(D), E10(E)
Engine Control Module
CCS
TC
SIL
D 3
Data Link Connector 3
SG
CG
SIL
TC
P-B
W(*2)
Y(*1)
W
BR
W-B
P-B
W
SB
P-B
W
BR
W
W-B
Cruise Control SW
ON- OFF
+ RES
- SET
CANCEL
ECC
CCS
C10
Combination SW

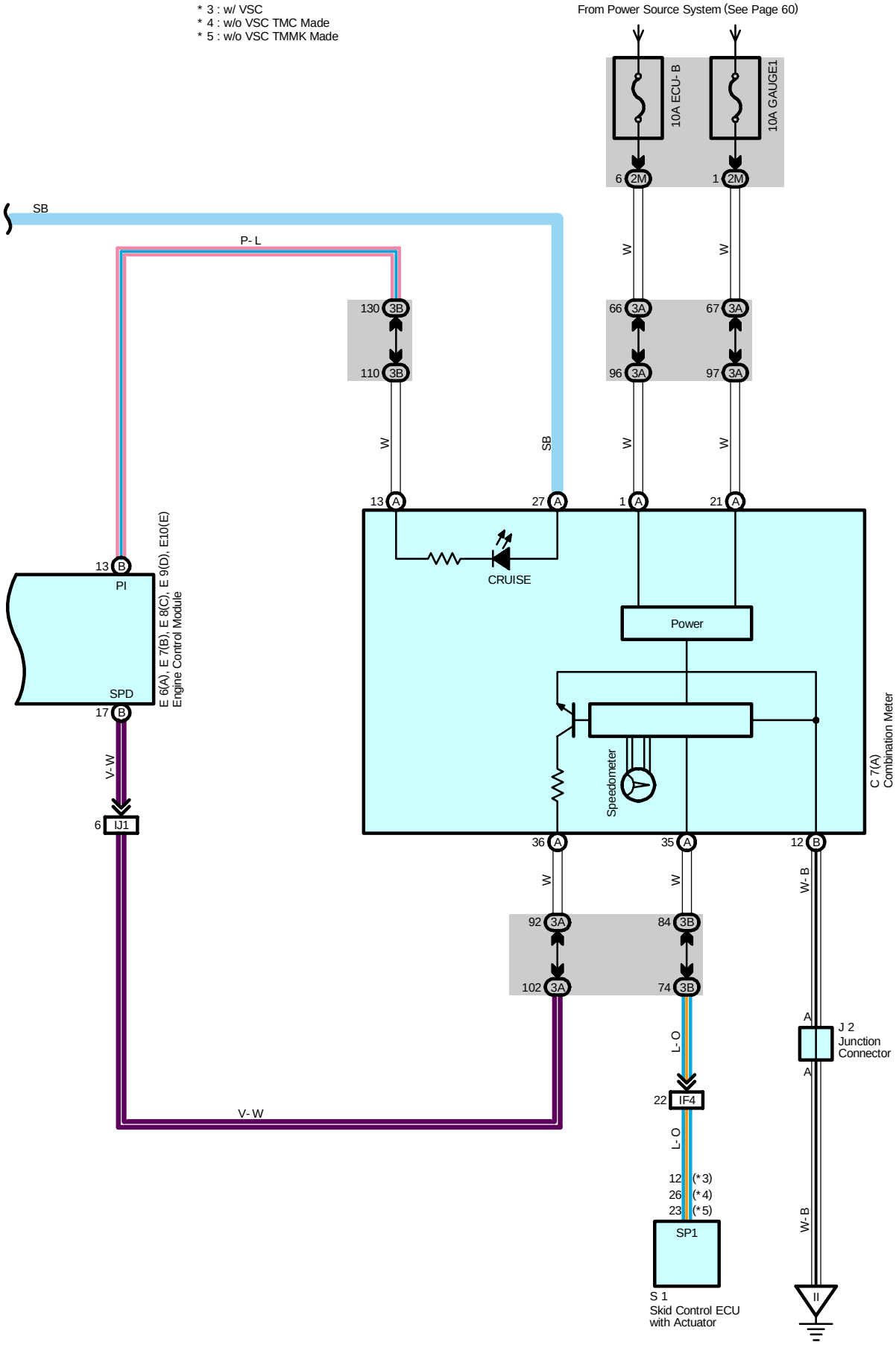
* 3 : w/ VSC
* 4 : w/o VSC TMC Made
* 5 : w/o VSC TMMK Made
From Power Source System (See Page 60)
10A ECU-B
10A GAUGE1
6 2M
1 2M
SB
P-L
W
130 3B
110 3B
66 3A
67 3A
96 3A
97 3A
SB
13 A
27 A
1 A
21 A
CRUISE
Power
Speedometer
C 7(A)
Combination Meter
13 B
PI
SPD
17 B
E 6(A), E 7(B), E 8(C), E 9(D), E10(E)
Engine Control Module
V-W
6 IJ1
36 A
35 A
12 B
W-B
92 3A
84 3B
102 3A
74 3B
L-O
22 IF4
12 (*3)
26 (*4)
23 (*5)
SP1
S 1
Skid Control ECU
with Actuator
A
J 2
Junction
Connector
A
W-B
V-W

## System Outline

The cruise control system is a constant vehicle speed controller in which control of the switch on the instrument panel makes it possible to automatically adjust the opening of the engine throttle valve without depressing of the accel. pedal.

**1. Set Operation**

When the cruise control main SW is turned on, the system starts preparations necessary for the cruise control and turns on the indicator light in the combination meter.

**2. Set Speed Control**

When the - SET SW is operated with the cruise control SW turned on during travelling, the constant vehicle speed is controlled.

**3. Coast Control**

When the - SET SW is kept turned on during cruise control travelling, the engine control module controls the throttle valve to decelerate the vehicle. Every time the - SET SW is turned on instantaneously, the vehicle speed is decelerated approximately 1.6 km/h.

**4. Accel Control**

When the + RES SW is kept turned on during cruise control travelling, the engine control module controls the throttle valve to accelerate the vehicle. Every time the + RES SW is turned on instantaneously, the vehicle speed is accelerated approximately 1.6 km/h.

**5. Resume Control**

When the vehicle speed is within the low speed limit (Approximately 40 km/h, 25 mph) if the cruise control is cancelled, use of the + RES SW accelerates the vehicle to the speed level used before canceling the cruise control.

**6. Manual Cancel Mechanism**

If any of the following signals is input during cruise control travelling, the cruise control is cancelled.

- The stop light SW is turned on.
- The CANCEL SW is turned on.
- The cruise control SW is turned off.
- Gear is shifted from D position to other position than D.

**7. Auto Cancel Function**

If any of the following conditions is encountered, the cruise control is automatically cancelled.

- The stop light SW wiring is faulty or short-circuited.
- The vehicle speed signal is faulty.
- The electronically controlled throttle malfunctions.

**8. Overdrive Control Function**

The overdrive control may be cancelled if the vehicle travels on the slope during cruise control travelling. After the overdrive control has been cancelled it is decided that the slope is finished, the vehicle returns to the overdrive control mode again.

## Service Hints

**E6 (A), E7 (B), E8 (C), E9 (D), E10 (E) Engine Control Module**

(A) 9-Ground : Approx. 12 volts with the ignition SW at ON or ST position
(A) 3, (B) 6-Ground : Always approx. 12 volts
(C)1, (C) 4, (C) 7, (D) 6, (D) 7, (E) 6, (E) 7-Ground : Always continuity
(B)19-Ground : Approx. 12 volts with the stop light SW at on
(B)24-Ground : Continuity with the cruise control SW at on
Approx. 1540 Ω with the CANCEL SW on in cruise control SW
Approx. 240 Ω with the + RES SW on in cruise control SW
Approx. 630 Ω with the - SET SW on in cruise control SW

**C10 Combination SW**

5-4 : Approx. 1540 Ω with the CANCEL SW on
Approx. 240 Ω with the + RES SW on
Approx. 630 Ω with the - SET SW on

# Cruise Control for 1MZ-FE and 3MZ-FE

**: Parts Location**

| Code | See Page | Code | See Page | Code | See Page |
|---|---|---|---|---|---|
| A4 | 36 (*1) | E6 A | 40 | J1 | 41 |
| A18 | 40 | E7 B | 40 | J2 | 41 |
| C7 A | 40 | E8 C | 40 | S1 | 37 (*1) |
| C10 | 40 | E9 D | 40 | S14 | 41 |
| D3 | 40 | E10 E | 40 | T12 | 37 (*1) |

**: Junction Block and Wire Harness Connector**

| Code | See Page | Junction Block and Wire Harness (Connector Location) |
|---|---|---|
| 1B | 25 | Engine Room Main Wire and Engine Room J/B (Engine Compartment Left) |
| 1C | | |
| 1H | | |
| 1K | 25 | Engine Wire and Engine Room J/B (Engine Compartment Left) |
| 2B | 28 | Instrument Panel Wire and Driver Side J/B (Lower Finish Panel) |
| 2G | 28 | Engine Room Main Wire and Driver Side J/B (Lower Finish Panel) |
| 2L | 29 | Instrument Panel Wire and Driver Side J/B (Lower Finish Panel) |
| 2M | | |
| 2O | | |
| 2P | | |
| 2R | | |
| 3A | 34 | Instrument Panel Wire and Passenger Side J/B (Instrument Panel Brace RH) |
| 3B | | |

**: Connector Joining Wire Harness and Wire Harness**

| Code | See Page | Joining Wire Harness and Wire Harness (Connector Location) |
|---|---|---|
| IF2 | 50 | Engine Room Main Wire and Instrument Panel Wire (Right Side of Steering Column Tube) |
| IF4 | | |
| IJ1 | 52 | Instrument Panel Wire and Instrument Panel Wire (Instrument Panel Reinforcement RH) |
| IL1 | 52 | Engine Wire and Instrument Panel Wire (Behind the Glove Box) |
| IL2 | | |

**: Ground Points**

| Code | See Page | Ground Points Location |
|---|---|---|
| ED | 46 (*1) | Left Fender |
| EE | 46 (*1) | Left Side of Cylinder Head |
| EF | 46 (*1) | Right Side of Cylinder Head |
| II | 50 | Cowl Side Panel LH |

**: Splice Points**

| Code | See Page | Wire Harness with Splice Points | Code | See Page | Wire Harness with Splice Points |
|---|---|---|---|---|---|
| I5 | 52 | Engine Wire | I10 | 52 | Engine Room Main Wire |

* 1 : 1MZ-FE, 3MZ-FE * 2 : 2AZ-FE * 3 : w/ Power Seat * 4 : w/o Power Seat

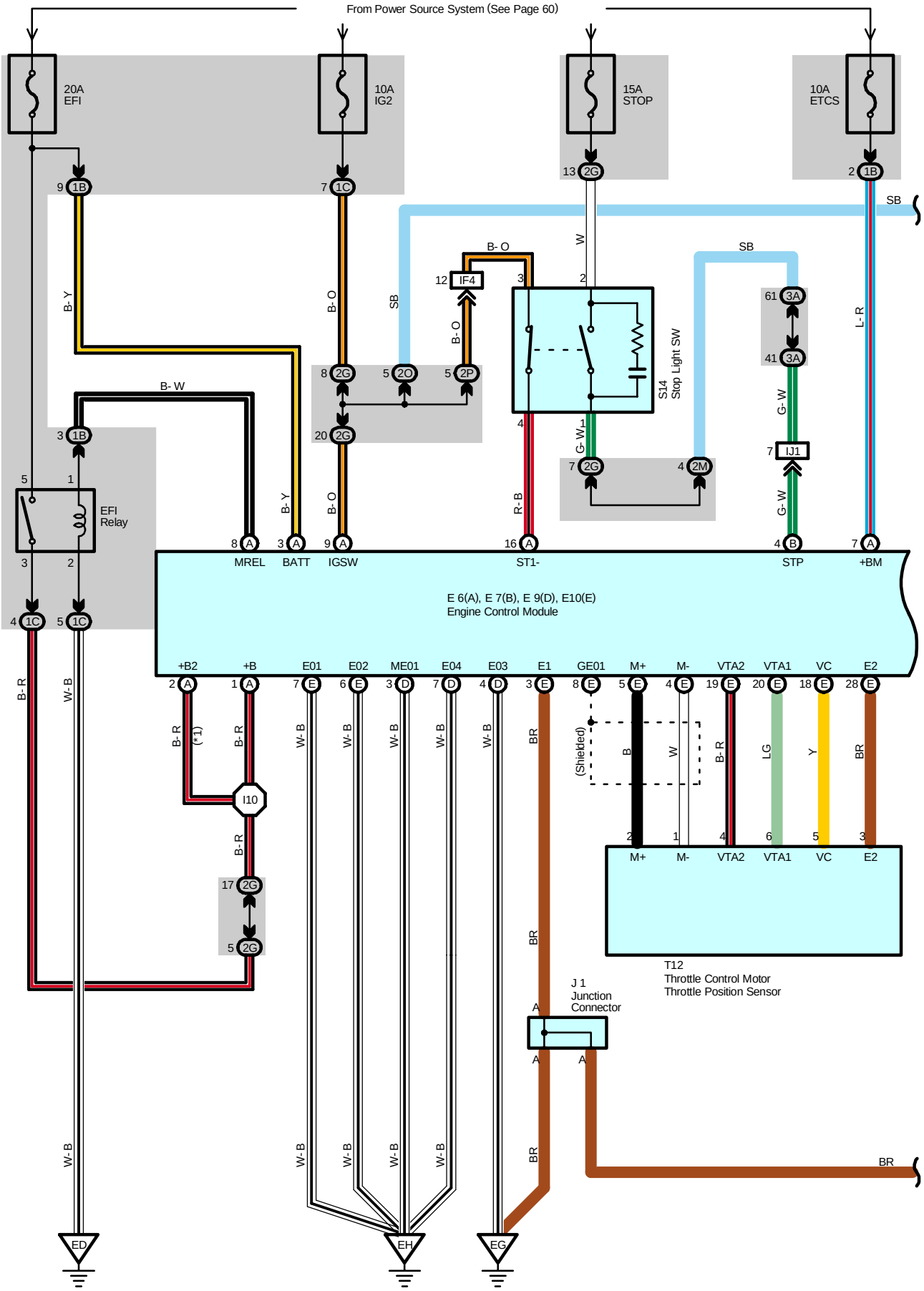
From Power Source System (See Page 60)
20A EFI
10A IG2
15A STOP
10A ETCS
EFI Relay
S14 Stop Light SW
MREL
BATT
IGSW
ST1-
STP
+BM
E 6(A), E 7(B), E 9(D), E10(E)
Engine Control Module
+B2
+B
E01
E02
ME01
E04
E03
E1
GE01
M+
M-
VTA2
VTA1
VC
E2
(Shielded)
T12
Throttle Control Motor
Throttle Position Sensor
J 1
Junction Connector
ED
EH
EG

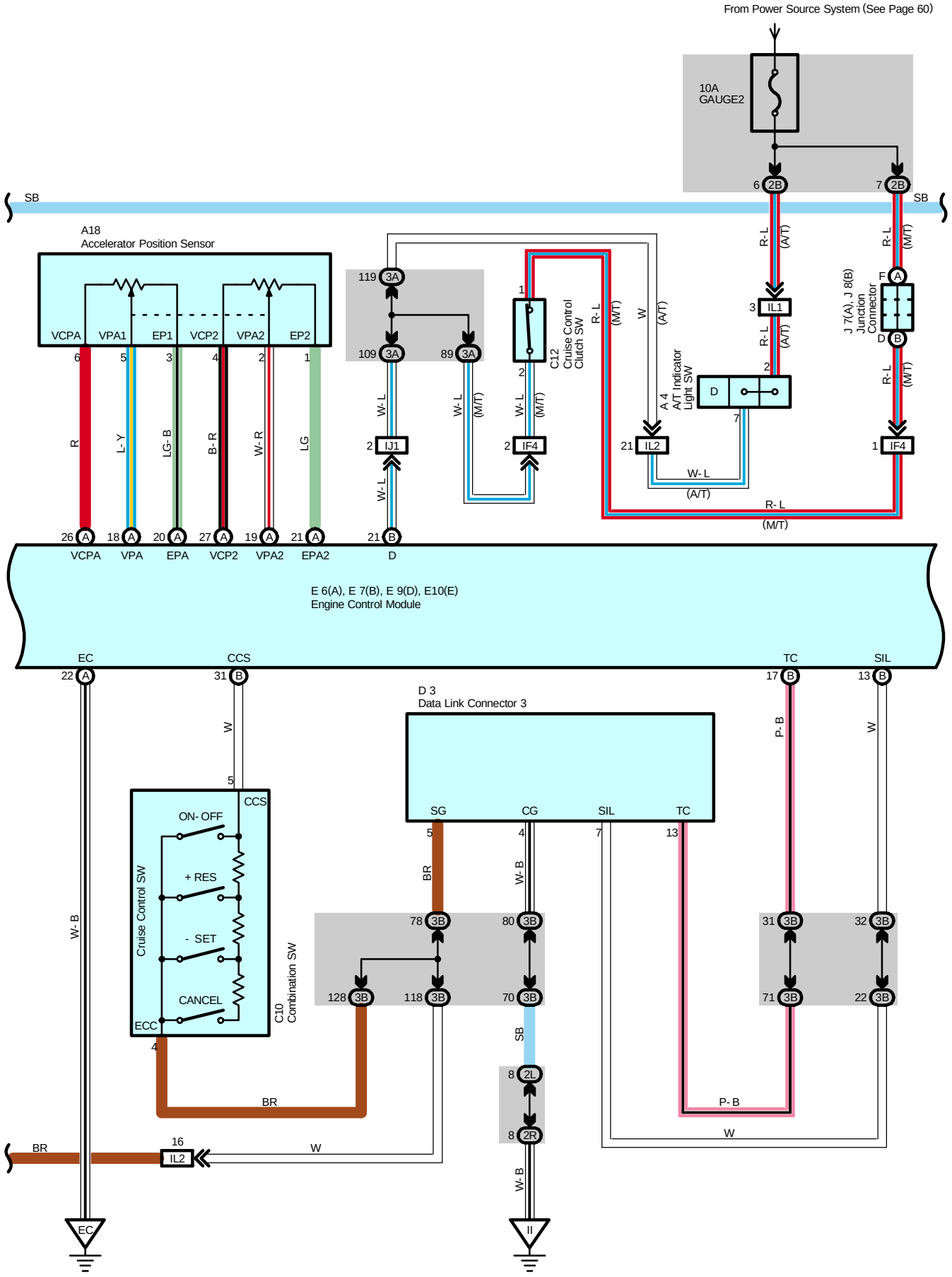
From Power Source System (See Page 60)
10A
GAUGE2
SB
A18
Accelerator Position Sensor
VCPA
VPA1
EP1
VCP2
VPA2
EP2
R
L- Y
LG- B
B- R
W- R
LG
W- L
R- L
(A/T)
(M/T)
W
C12
Cruise Control
Clutch SW
A 4
A/T Indicator
Light SW
J 7(A), J 8(B)
Junction
Connector
E 6(A), E 7(B), E 9(D), E10(E)
Engine Control Module
EC
CCS
TC
SIL
D 3
Data Link Connector 3
SG
CG
SIL
TC
Cruise Control SW
ON- OFF
+ RES
- SET
CANCEL
ECC
C10
Combination SW
W- B
BR
P- B
SB
W
EC
II

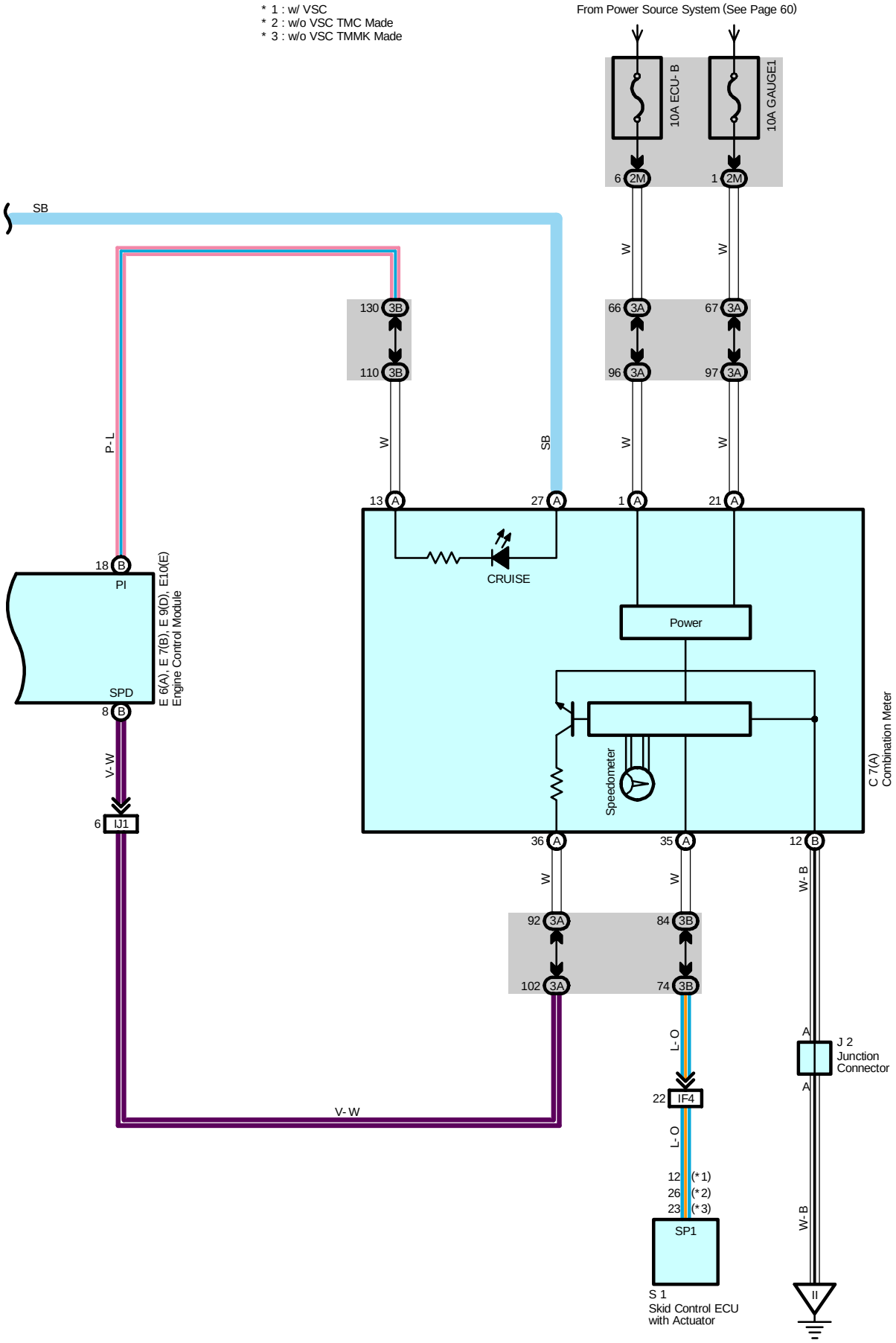
* 1 : w/ VSC
* 2 : w/o VSC TMC Made
* 3 : w/o VSC TMMK Made
From Power Source System (See Page 60)
10A ECU- B
10A GAUGE1
6 2M
1 2M
SB
W
W
130 3B
110 3B
66 3A
67 3A
96 3A
97 3A
P- L
W
SB
W
W
13 A
27 A
1 A
21 A
CRUISE
Power
18 B
PI
SPD
8 B
E 6(A), E 7(B), E 9(D), E10(E)
Engine Control Module
V- W
6 IJ1
Speedometer
C 7(A)
Combination Meter
36 A
35 A
12 B
W
W
W- B
92 3A
84 3B
102 3A
74 3B
L- O
A
J 2
Junction
Connector
A
22 IF4
L- O
12 (*1)
26 (*2)
23 (*3)
SP1
S 1
Skid Control ECU
with Actuator
W- B
V- W

## System Outline

The cruise control system is a constant vehicle speed controller in which control of the switch on the instrument panel makes it possible to automatically adjust the opening of the engine throttle valve without depressing of the accel. pedal.

**1. Set Operation**

When the cruise control main SW is turned on, the system starts preparations necessary for the cruise control and turns on the indicator light in the combination meter.

**2. Set Speed Control**

When the - SET SW is operated with the cruise control SW turned on during travelling, the constant vehicle speed is controlled.

**3. Coast Control**

When the - SET SW is kept turned on during cruise control travelling, the engine control module controls the throttle valve to decelerate the vehicle. Every time the - SET SW is turned on instantaneously, the vehicle speed is decelerated approximately 1.6 km/h.

**4. Accel Control**

When the + RES SW is kept turned on during cruise control travelling, the engine control module controls the throttle valve to accelerate the vehicle. Every time the + RES SW is turned on instantaneously, the vehicle speed is accelerated approximately 1.6 km/h.

**5. Resume Control**

When the vehicle speed is within the low speed limit (Approximately 40 km/h, 25 mph) if the cruise control is cancelled, use of the + RES SW accelerates the vehicle to the speed level used before canceling the cruise control.

**6. Manual Cancel Mechanism**

If any of the following signals is input during cruise control travelling, the cruise control is cancelled.

* The stop light SW is turned on.
* The CANCEL SW is turned on.
* The cruise control SW is turned off.
* Gear is shifted D position to other positions than D. (A/T)
* The clutch pedal is depressed. (M/T)

**7. Auto Cancel Function**

If any of the following conditions is encountered, the cruise control is automatically cancelled.

* The stop light SW wiring is faulty or short-circuited.
* The vehicle speed signal is faulty.
* The electronically controlled throttle malfunctions.

**8. Overdrive Control Function**

The overdrive control may be cancelled if the vehicle travels on the slope during cruise control travelling. After the overdrive control has been cancelled, if the vehicle speed exceeds the overdrive return speed (The set speed is 2 km/h, 1.2 mph) and it is decided that the slope is finished, the vehicle returns to the overdrive control mode again.

## Service Hints

**E6 (A), E7 (B), E9 (D), E10 (E) Engine Control Module**

(A) 9-Ground : Approx. 12 volts with the ignition SW at ON or ST position
(A) 3, (A) 7-Ground : Always approx. 12 volts
(A)22, (D) 3, (D) 4, (D) 7, (E) 3, (E) 6, (E) 7-Ground : Always continuity
(B) 4-Ground : Approx. 12 volts with the stop light SW at on
(B)31-Ground : Continuity with the cruise control main SW at on
Approx. 1540 Ω with the CANCEL SW on in cruise control SW
Approx. 240 Ω with the + RES SW on in cruise control SW
Approx. 630 Ω with the - SET SW on in cruise control SW

**C10 Combination SW**

5-4 : Approx. 1540 Ω with the CANCEL SW on
Approx. 240 Ω with the + RES SW on
Approx. 630 Ω with the - SET SW on

# Cruise Control for 2AZ-FE

**: Parts Location**

| Code | See Page | Code | See Page | Code | See Page |
|---|---|---|---|---|---|
| A4 | 38 (*2) | E6 A | 40 | J7 A | 41 |
| A18 | 40 | E7 B | 40 | J8 B | 41 |
| C7 A | 40 | E9 D | 40 | S1 | 39 (*2) |
| C10 | 40 | E10 E | 40 | S14 | 41 |
| C12 | 40 | J1 | 41 | T12 | 39 (*2) |
| D3 | 40 | J2 | 41 | | |

**: Junction Block and Wire Harness Connector**

| Code | See Page | Junction Block and Wire Harness (Connector Location) |
|---|---|---|
| 1B | 25 | Engine Room Main Wire and Engine Room J/B (Engine Compartment Left) |
| 1C | | |
| 2B | 28 | Instrument Panel Wire and Driver Side J/B (Lower Finish Panel) |
| 2G | 28 | Engine Room Main Wire and Driver Side J/B (Lower Finish Panel) |
| 2L | 29 | Instrument Panel Wire and Driver Side J/B (Lower Finish Panel) |
| 2M | | |
| 2O | | |
| 2P | | |
| 2R | | |
| 3A | 34 | Instrument Panel Wire and Passenger Side J/B (Instrument Panel Brace RH) |
| 3B | | |

**: Connector Joining Wire Harness and Wire Harness**

| Code | See Page | Joining Wire Harness and Wire Harness (Connector Location) |
|---|---|---|
| IF4 | 50 | Engine Room Main Wire and Instrument Panel Wire (Right Side of Steering Column Tube) |
| IJ1 | 52 | Instrument Panel Wire and Instrument Panel Wire (Instrument Panel Reinforcement RH) |
| IL1 | 52 | Engine Wire and Instrument Panel Wire (Behind the Glove Box) |
| IL2 | | |

**: Ground Points**

| Code | See Page | Ground Points Location |
|---|---|---|
| EC | 48 (*2) | Left Fender |
| ED | | |
| EG | 48 (*2) | Left Side of Cylinder Head |
| EH | 48 (*2) | Intake Side of Cylinder Block |
| II | 50 | Cowl Side Panel LH |

**: Splice Points**

| Code | See Page | Wire Harness with Splice Points | Code | See Page | Wire Harness with Splice Points |
|---|---|---|---|---|---|
| I10 | 52 | Engine Room Main Wire | | | |

* 1 : 1MZ-FE, 3MZ-FE * 2 : 2AZ-FE * 3 : w/ Power Seat * 4 : w/o Power Seat

# ECT and A/T Indicator for 1MZ-FE and 3MZ-FE

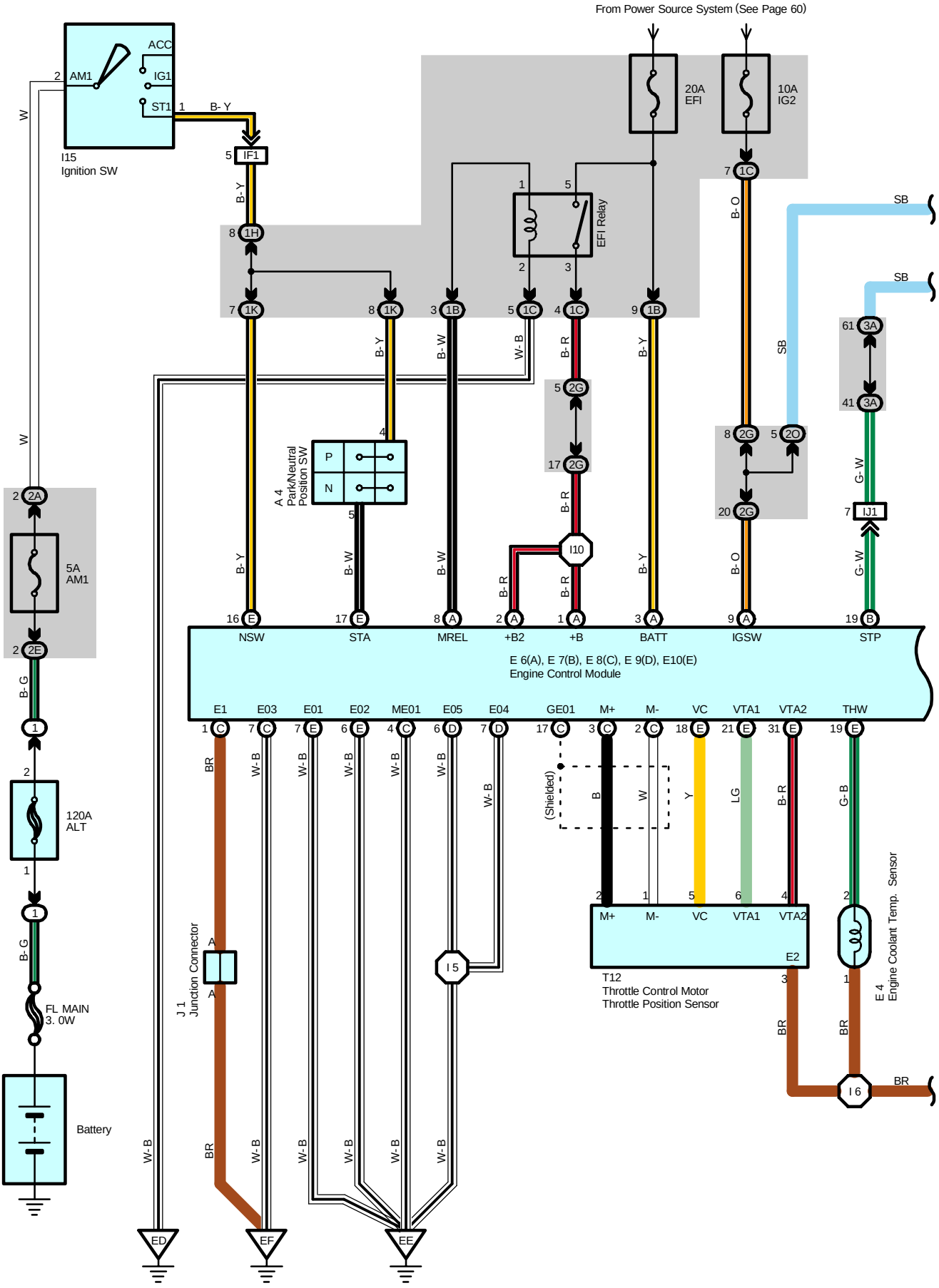

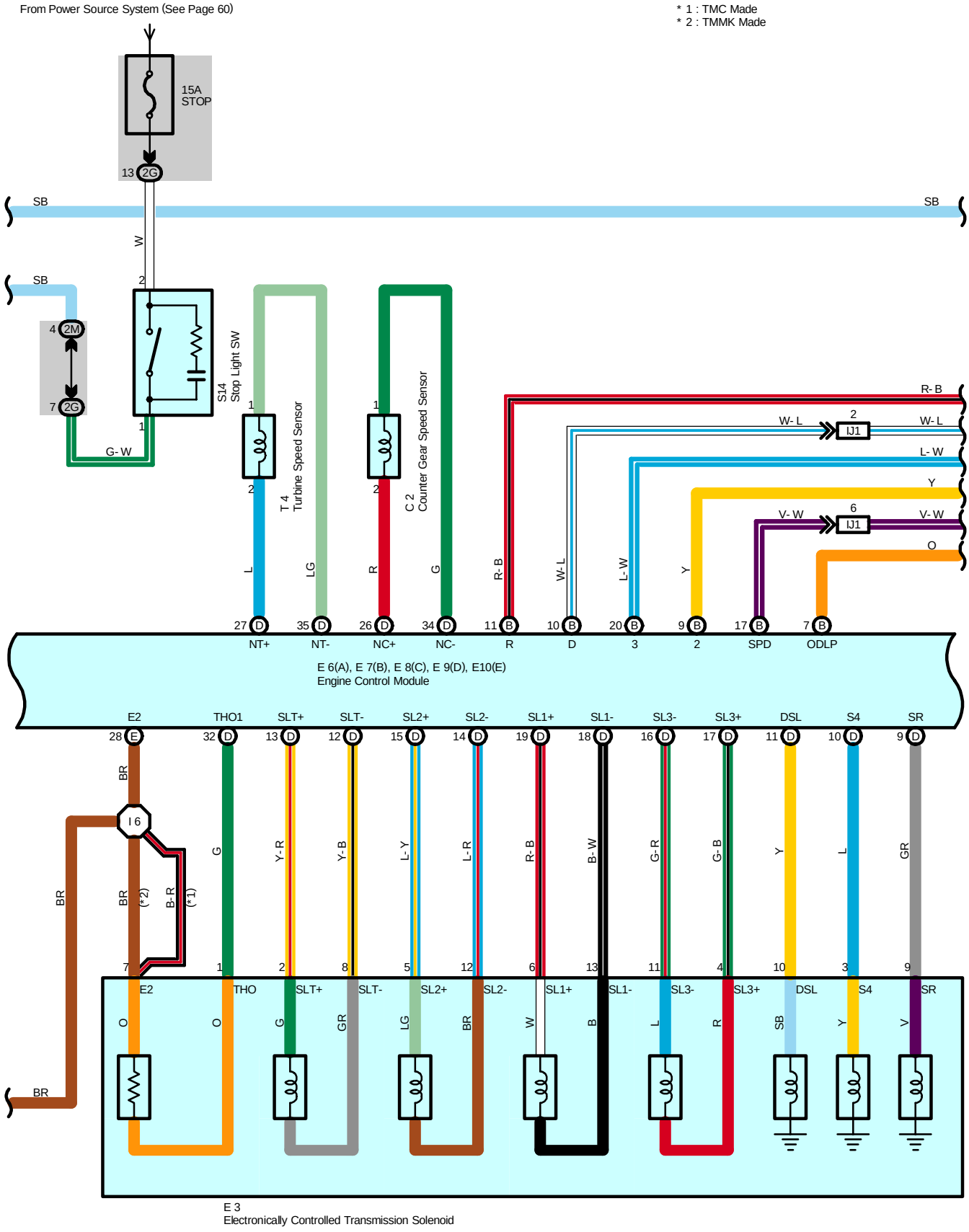
From Power Source System (See Page 60)
* 1 : TMC Made
* 2 : TMMK Made
15A
STOP
13 2G
SB
SB
W
SB
2
4 2M
7 2G
1
G- W
S14
Stop Light SW
1
2
T 4
Turbine Speed Sensor
1
2
C 2
Counter Gear Speed Sensor
L
LG
R
G
R- B
W- L
L- W
Y
V- W
O
2
IJ1
6
IJ1
R- B
W- L
L- W
Y
V- W
O
27 D
35 D
26 D
34 D
11 B
10 B
20 B
9 B
17 B
7 B
NT+
NT-
NC+
NC-
R
D
3
2
SPD
ODLP
E 6(A), E 7(B), E 8(C), E 9(D), E10(E)
Engine Control Module
E2
THO1
SLT+
SLT-
SL2+
SL2-
SL1+
SL1-
SL3-
SL3+
DSL
S4
SR
28 E
32 D
13 D
12 D
15 D
14 D
19 D
18 D
16 D
17 D
11 D
10 D
9 D
BR
I 6
BR
BR
(*2)
B- R
(*1)
G
Y- R
Y- B
L- Y
L- R
R- B
B- W
G- R
G- B
Y
L
GR
7
1
2
8
5
12
6
13
11
4
10
3
9
E2
THO
SLT+
SLT-
SL2+
SL2-
SL1+
SL1-
SL3-
SL3+
DSL
S4
SR
O
O
G
GR
LG
BR
W
B
L
R
SB
Y
V
BR
E 3
Electronically Controlled Transmission Solenoid

# ECT and A/T Indicator for 1MZ-FE and 3MZ-FE

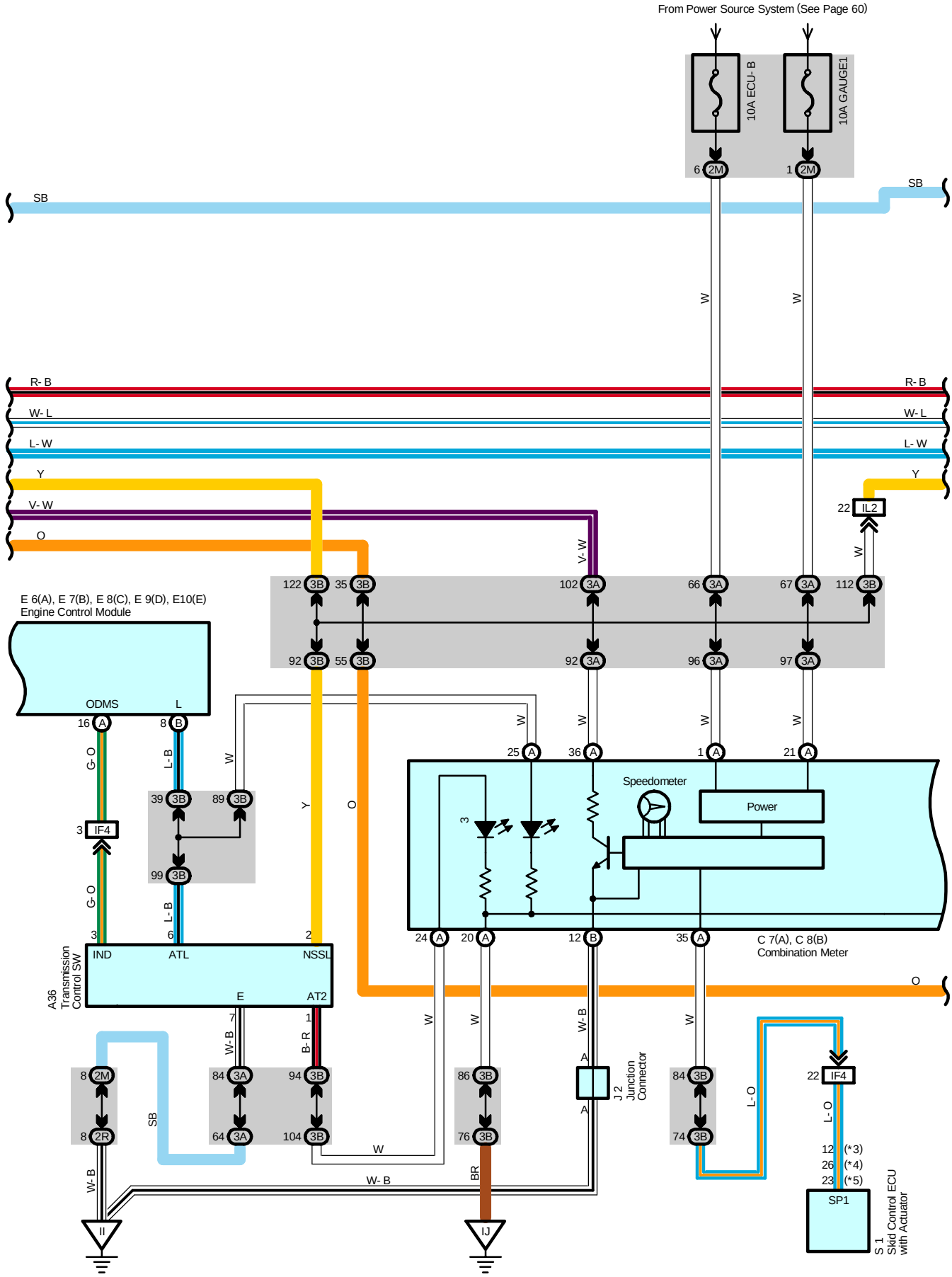

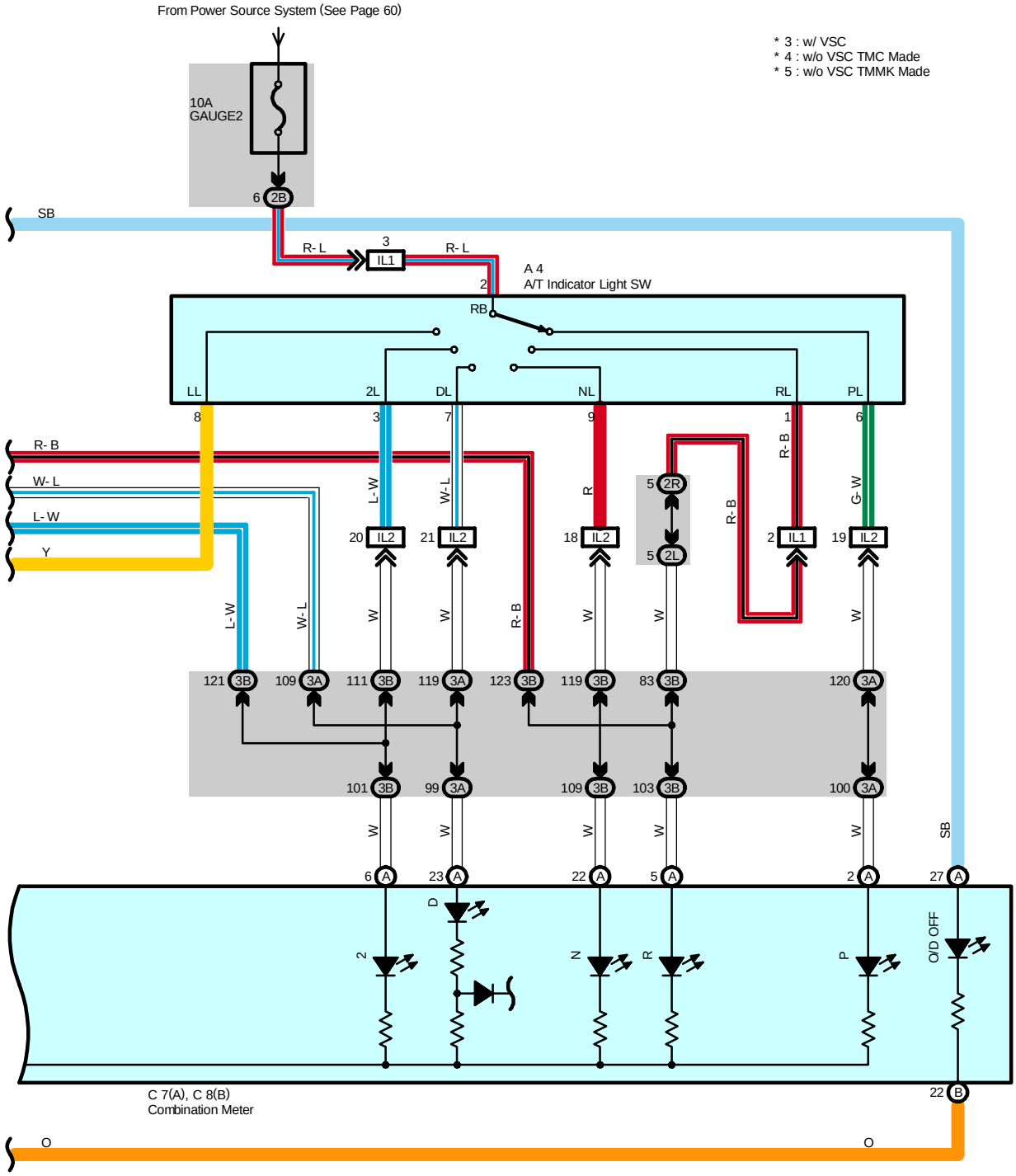
From Power Source System (See Page 60)
* 3 : w/ VSC
* 4 : w/o VSC TMC Made
* 5 : w/o VSC TMMK Made
10A
GAUGE2
6 2B
SB
R- L
3
IL1
R- L
2
A 4
A/T Indicator Light SW
RB
LL
2L
DL
NL
RL
PL
8
3
7
9
1
6
R- B
W- L
L- W
Y
L- W
W- L
W
W
R- B
W
W
R
5 2R
5 2L
R- B
R- B
G- W
20 IL2
21 IL2
18 IL2
2 IL1
19 IL2
121 3B
109 3A
111 3B
119 3A
123 3B
119 3B
83 3B
120 3A
101 3B
99 3A
109 3B
103 3B
100 3A
W
W
W
W
W
6 A
23 A
22 A
5 A
2 A
27 A
SB
D
2
N
R
P
O/D OFF
C 7(A), C 8(B)
Combination Meter
22 B
O
O

# ECT and A/T Indicator for 1MZ-FE and 3MZ-FE

**System Outline**

Previous automatic transaxle have selected each gear shift using mechanically controlled throttle hydraulic pressure, governor hydraulic pressure and lock-up hydraulic pressure. The electronically controlled transmission, however, electrically controls the line pressure, throttle pressure, lock-up pressure and accumulator pressure etc. through the solenoid valve. The electronically controlled transmission is a system which precisely controls gear shift timing and lock-up timing in response to the vehicle's driving conditions and the engine condition detected by various sensors. It makes smooth driving possible by shift selection for each gear which is the most appropriate to the driving conditions at that time, and by preventing downing, squat and gear shift shock when starting off.

**1. Gear Shift Operation**

When driving, the engine warm up condition is input as a signal to TERMINAL THW of the engine control module from the engine coolant temp. sensor and the vehicle speed signal is input to TERMINAL SPD of the engine control module. At the same time, the throttle valve opening signal from the throttle position sensor is input to TERMINALS VTA1 and VTA2 of the engine control module as throttle angle signal.
Based on these signals, the engine control module selects the best shift position for the driving conditions and sends current to the electronically controlled transmission solenoid.

**2. Lock-Up Operation**

When each signal makes engine control module recognize that LOCK-UP condition is satisfied, the current flows from engine control module TERMINAL DSL to electronically controlled transmission solenoid TERMINAL 10. At the same time, the current flows engine control module TERMINAL SL1+ to electronically controlled transmission solenoid TERMINAL 6 and from TERMINAL 13 to engine control module TERMINAL SL1-. This works LOCK-UP solenoid to perform LOCK-UP operation.

**3. Stop Light SW Circuit**

If the brake pedal is depressed (Stop light SW on) when driving in lock-up condition, a signal is input to TERMINAL STP of the engine control module. The engine control module operates and cuts the current to the solenoid to release lock-up.

**4. Overdrive Circuit**

* Overdrive on
  When the engine is turned on from ignition off, the engine control module turns the O/D on. When the O/D main SW is pushed while the O/D is off, a signal is input into TERMINAL ODMS of the engine control module, and the O/D is turned on by the engine control module. In this case, the engine control module controls the gear shift according to the vehicle's driving condition, using the O/D range. At this time, the O/D off indicator light is off.
* Overdrive off
  When the O/D main SW is pushed while the O/D is on, a signal is input into TERMINAL ODMS of the engine control module, and the O/D is turned off. At this time, the current flows through the O/D off indicator light to TERMINAL ODLP of the engine control module. As a result, the O/D off indicator light turns on, and the engine control module controls the gear shift according to the vehicle's driving condition, without using the O/D range.

**Service Hints**

**E6 (A), E7 (B), E8 (C), E9 (D), E10 (E) Engine Control Module**

L-E1 : 10.0-14.0 volts (Ignition SW on and shift lever at L position)
2-E1 : 10.0-14.0 volts (Ignition SW on and shift lever at 2 position)
R-E1 : 10.0-14.0 volts (Ignition SW on and shift lever at R position)
D-E1 : 10.0-14.0 volts (Ignition SW on and shift lever at D position)
ODMS-E1 : 10.0-14.0 volts (O/D main SW on)
Below 1.0 volts (O/D main SW off)
THO1-E2 : Below 1.0 volts (Ignition SW on and AFT temperature 110 °C (230 °F)
SLT+ -SLT- : 10.0-14.0 volts (Ignition SW on)

**A4 A/T Indicator Light SW**

2-6 : Closed with the shift lever in P position
2-1 : Closed with the shift lever in R position
2-9 : Closed with the shift lever in N position
2-7 : Closed with the shift lever in D position
2-8 : Closed with the shift lever in L position
2-3 : Closed with the shift lever in 2 position

## : Parts Location

| Code | See Page | Code | See Page | Code | See Page |
|---|---|---|---|---|---|
| A4 | 36 (*1) | E6 A | 40 | J2 | 41 |
| A36 | 40 | E7 B | 40 | S1 | 37 (*1) |
| C2 | 36 (*1) | E8 C | 40 | S14 | 41 |
| C7 A | 40 | E9 D | 40 | T4 | 37 (*1) |
| C8 B | 40 | E10 E | 40 | T12 | 37 (*1) |
| E3 | 36 (*1) | I15 | 41 | | |
| E4 | 36 (*1) | J1 | 41 | | |

## : Relay Blocks

| Code | See Page | Relay Blocks (Relay Block Location) |
|---|---|---|
| 1 | 22 | Engine Room R/B (Engine Compartment Left) |

## : Junction Block and Wire Harness Connector

| Code | See Page | Junction Block and Wire Harness (Connector Location) |
|---|---|---|
| 1B | 25 | Engine Room Main Wire and Engine Room J/B (Engine Compartment Left) |
| 1C | | |
| 1H | | |
| 1K | 25 | Engine Wire and Engine Room J/B (Engine Compartment Left) |
| 2A | 28 | Instrument Panel Wire and Driver Side J/B (Lower Finish Panel) |
| 2B | | |
| 2E | 28 | Engine Room Main Wire and Driver Side J/B (Lower Finish Panel) |
| 2G | | |
| 2L | 29 | Instrument Panel Wire and Driver Side J/B (Lower Finish Panel) |
| 2M | | |
| 2O | | |
| 2R | | |
| 3A | 34 | Instrument Panel Wire and Passenger Side J/B (Instrument Panel Brace RH) |
| 3B | | |

## : Connector Joining Wire Harness and Wire Harness

| Code | See Page | Joining Wire Harness and Wire Harness (Connector Location) |
|---|---|---|
| IF1 | 50 | Engine Room Main Wire and Instrument Panel Wire (Right Side of Steering Column Tube) |
| IF4 | | |
| IJ1 | 52 | Instrument Panel Wire and Instrument Panel Wire (Instrument Panel Reinforcement RH) |
| IL1 | 52 | Engine Wire and Instrument Panel Wire (Behind the Glove Box) |
| IL2 | | |

## : Ground Points

| Code | See Page | Ground Points Location |
|---|---|---|
| ED | 46 (*1) | Left Fender |
| EE | 46 (*1) | Left Side of Cylinder Head |
| EF | 46 (*1) | Right Side of Cylinder Head |
| II | 50 | Cowl Side Panel LH |
| IJ | 50 | Instrument Panel Brace LH |

## : Splice Points

| Code | See Page | Wire Harness with Splice Points | Code | See Page | Wire Harness with Splice Points |
|---|---|---|---|---|---|
| I5 | 52 | Engine Wire | I10 | 52 | Engine Room Main Wire |
| I6 | | | | | |

* 1 : 1MZ-FE, 3MZ-FE  * 2 : 2AZ-FE  * 3 : w/ Power Seat  * 4 : w/o Power Seat

# ECT and A/T Indicator for 2AZ-FE

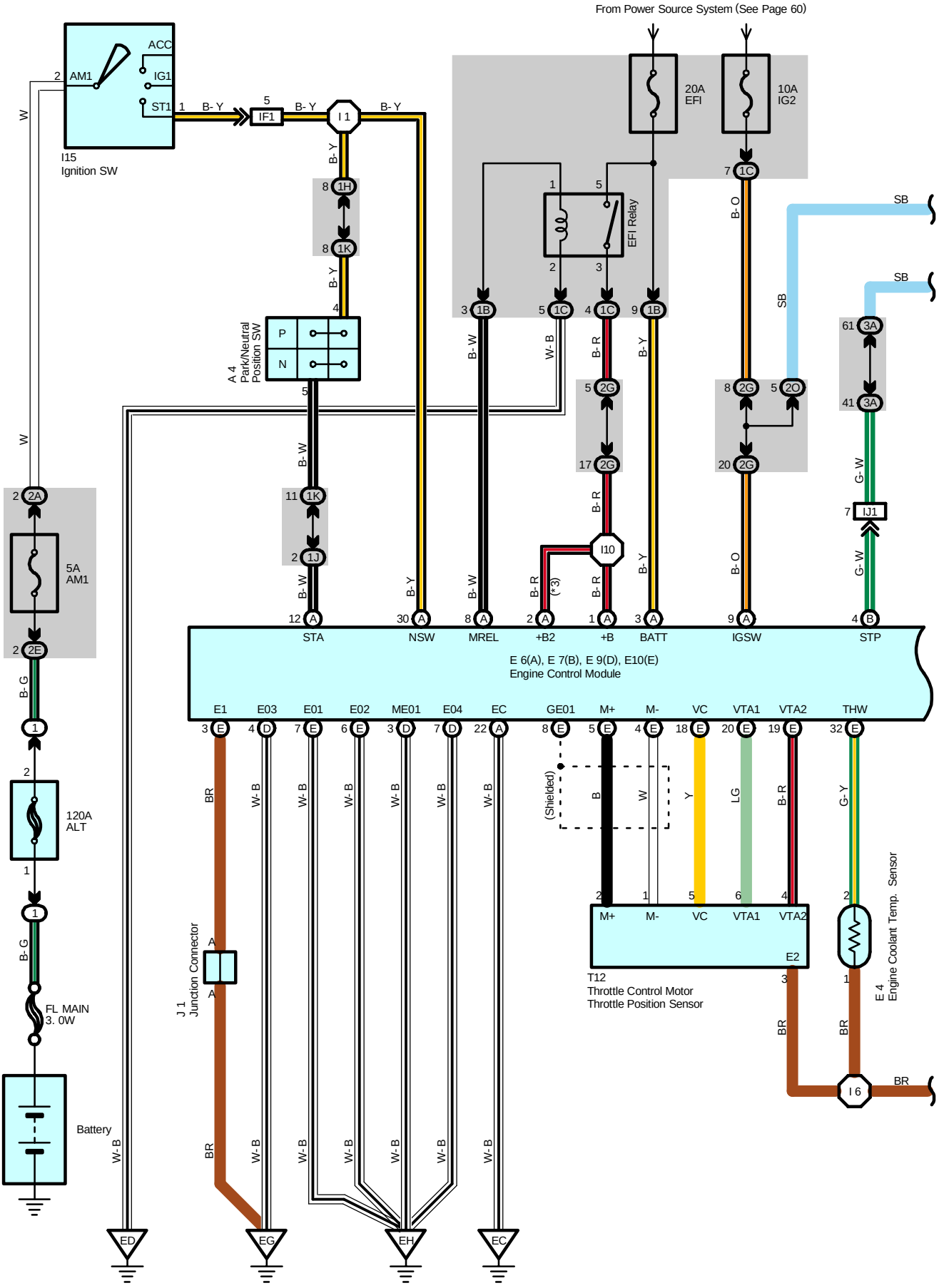

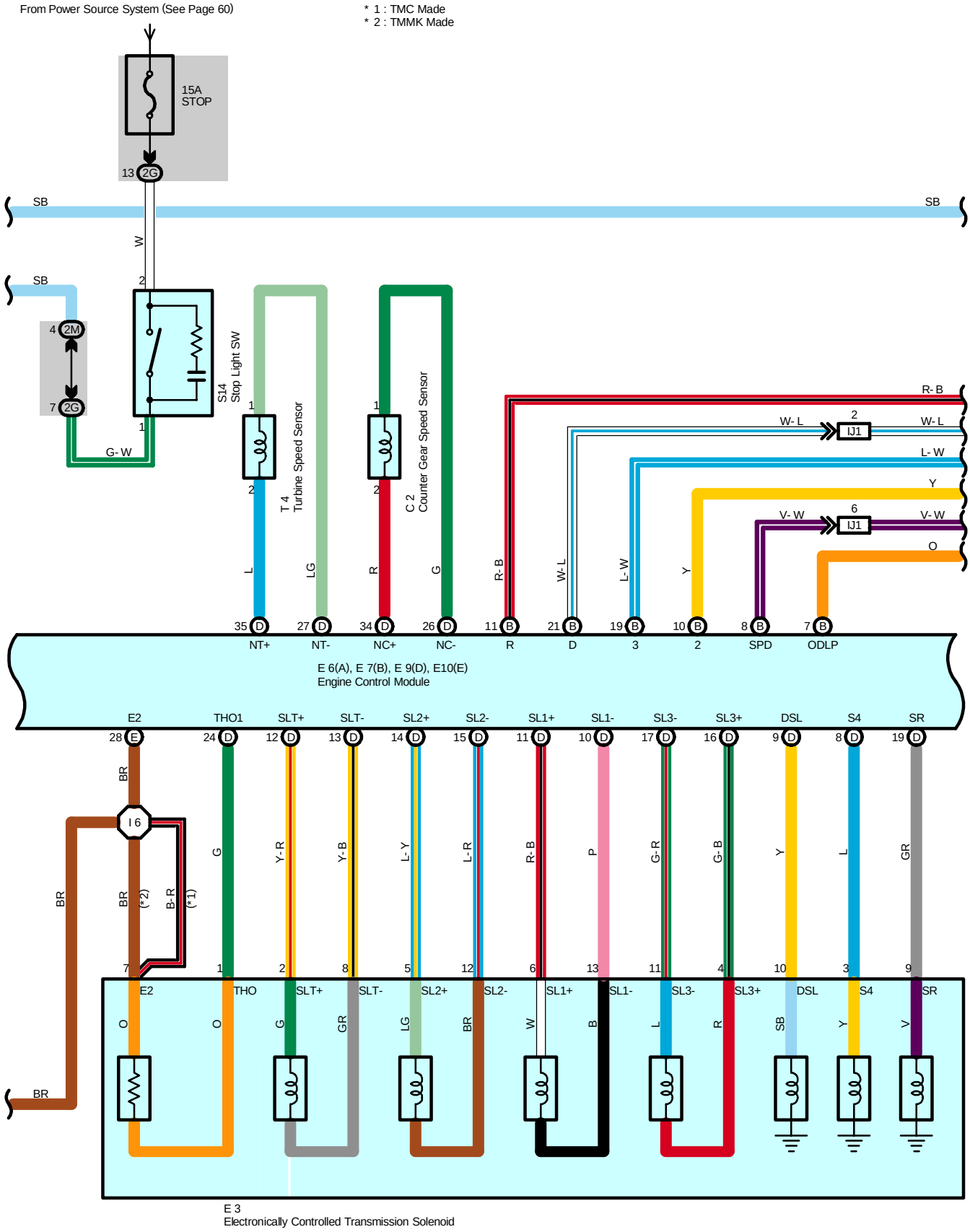
From Power Source System (See Page 60)
* 1 : TMC Made
* 2 : TMMK Made
15A
STOP
13 2G
SB
SB
W
SB
2
4 2M
7 2G
1
G- W
S14
Stop Light SW
1
2
T 4
Turbine Speed Sensor
1
2
C 2
Counter Gear Speed Sensor
L
LG
R
G
R- B
W- L
L- W
Y
V- W
O
2
IJ1
6
IJ1
R- B
W- L
L- W
Y
V- W
O
35 D
27 D
34 D
26 D
11 B
21 B
19 B
10 B
8 B
7 B
NT+
NT-
NC+
NC-
R
D
3
2
SPD
ODLP
E 6(A), E 7(B), E 9(D), E10(E)
Engine Control Module
E2
THO1
SLT+
SLT-
SL2+
SL2-
SL1+
SL1-
SL3-
SL3+
DSL
S4
SR
28 E
24 D
12 D
13 D
14 D
15 D
11 D
10 D
17 D
16 D
9 D
8 D
19 D
BR
I 6
BR
BR
(*2)
B- R
(*1)
G
Y- R
Y- B
L- Y
L- R
R- B
P
G- R
G- B
Y
L
GR
7
1
2
8
5
12
6
13
11
4
10
3
9
BR
E2
THO
SLT+
SLT-
SL2+
SL2-
SL1+
SL1-
SL3-
SL3+
DSL
S4
SR
O
O
G
GR
LG
BR
W
B
L
R
SB
Y
V
E 3
Electronically Controlled Transmission Solenoid

# ECT and A/T Indicator for 2AZ-FE

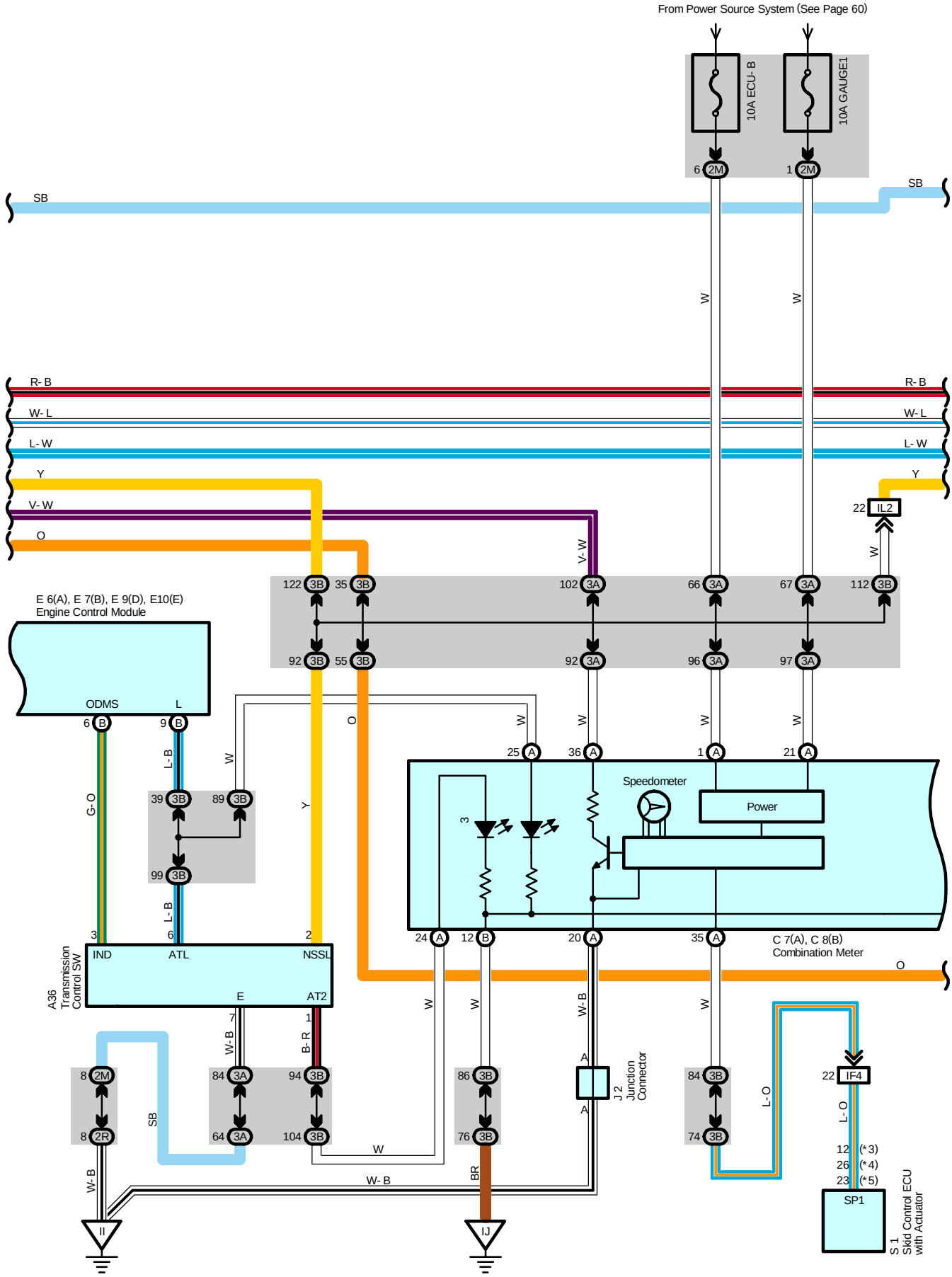

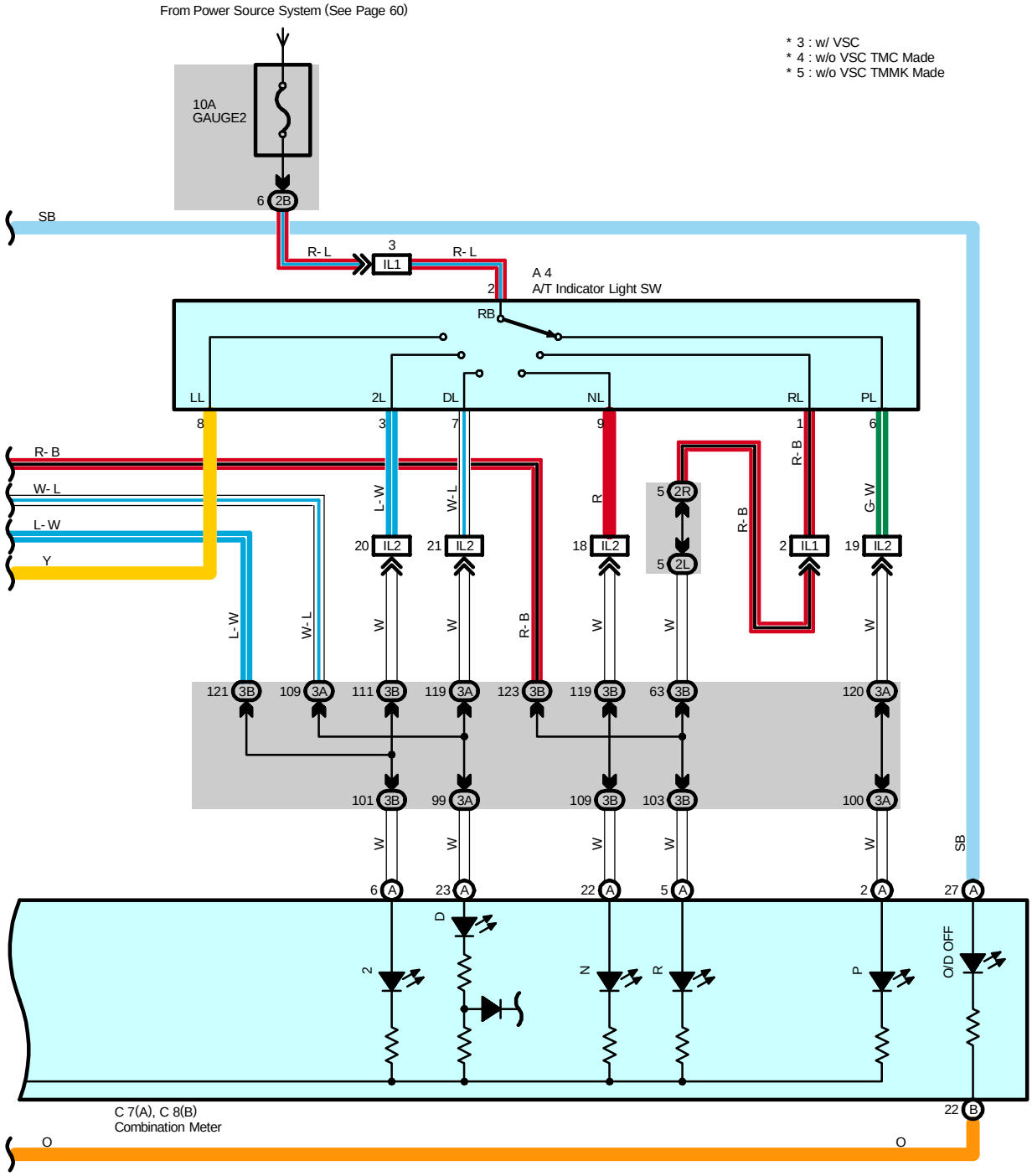
From Power Source System (See Page 60)
* 3 : w/ VSC
* 4 : w/o VSC TMC Made
* 5 : w/o VSC TMMK Made
10A
GAUGE2
6 2B
SB
R- L
3
IL1
R- L
2
A 4
A/T Indicator Light SW
RB
LL
2L
DL
NL
RL
PL
8
3
7
9
1
6
R- B
W- L
L- W
Y
L- W
W- L
W
W
R- B
W
W
R
5 2R
5 2L
R- B
R- B
G- W
20 IL2
21 IL2
18 IL2
2 IL1
19 IL2
121 3B
109 3A
111 3B
119 3A
123 3B
119 3B
63 3B
120 3A
101 3B
99 3A
109 3B
103 3B
100 3A
W
W
W
W
W
6 A
23 A
22 A
5 A
2 A
27 A
SB
D
2
N
R
P
O/D OFF
C 7(A), C 8(B)
Combination Meter
22 B
O
O

# ECT and A/T Indicator for 2AZ-FE

**System Outline**

Previous automatic transaxle have selected each gear shift using mechanically controlled throttle hydraulic pressure, governor hydraulic pressure and lock-up hydraulic pressure. The electronically controlled transmission, however, electrically controls the line pressure, throttle pressure, lock-up pressure and accumulator pressure etc. through the solenoid valve. The electronically controlled transmission is a system which precisely controls gear shift timing and lock-up timing in response to the vehicle's driving conditions and the engine condition detected by various sensors. It makes smooth driving possible by shift selection for each gear which is the most appropriate to the driving conditions at that time, and by preventing downing, squat and gear shift shock when starting off.

**1. Gear Shift Operation**

When driving, the engine warm up condition is input as a signal to TERMINAL THW of the engine control module from the engine coolant temp. sensor and the vehicle speed signal is input to TERMINAL SPD of the engine control module. At the same time, the throttle valve opening signal from the throttle position sensor is input to TERMINALS VTA1 and VTA2 of the engine control module as throttle angle signal.
Based on these signals, the engine control module selects the best shift position for the driving conditions and sends current to the electronically controlled transmission solenoid.

**2. Lock-Up Operation**

When each signal makes engine control module recognize that LOCK-UP condition is satisfied, the current flows from engine control module TERMINAL DSL to electronically controlled transmission solenoid TERMINAL 10. At the same time, the current flows engine control module TERMINAL SL1+ to electronically controlled transmission solenoid TERMINAL 6 and from TERMINAL 13 to engine control module TERMINAL SL1-. This works LOCK-UP solenoid to perform LOCK-UP operation.

**3. Stop Light SW Circuit**

If the brake pedal is depressed (Stop light SW on) when driving in lock-up condition, a signal is input to TERMINAL STP of the engine control module. The engine control module operates and cuts the current to the solenoid to release lock-up.

**4. Overdrive Circuit**

* Overdrive on
  When the engine is turned on from ignition off, the engine control module turns the O/D on. When the O/D main SW is pushed while the O/D is off, a signal is input into TERMINAL ODMS of the engine control module, and the O/D is turned on by the engine control module. In this case, the engine control module controls the gear shift according to the vehicle's driving condition, using the O/D range. At this time, the O/D off indicator light is off.
* Overdrive off
  When the O/D main SW is pushed while the O/D is on, a signal is input into TERMINAL ODMS of the engine control module, and the O/D is turned off. At this time, the current flows through the O/D off indicator light to TERMINAL ODLP of the engine control module. As a result, the O/D off indicator light turns on, and the engine control module controls the gear shift according to the vehicle's driving condition, without using the O/D range.

**Service Hints**

**E6 (A), E7 (B), E9 (D), E10 (E) Engine Control Module**

L-E1 : 10.0-14.0 volts (Ignition SW on and shift lever at L position)
2-E1 : 10.0-14.0 volts (Ignition SW on and shift lever at 2 position)
R-E1 : 10.0-14.0 volts (Ignition SW on and shift lever at R position)
D-E1 : 10.0-14.0 volts (Ignition SW on and shift lever at D position)
ODMS-E1 : 10.0-14.0 volts (O/D main SW on)
Below 1.0 volts (O/D main SW off)
THO1-E2 : Below 1.0 volts (Ignition SW on and AFT temperature 110 °C (230 °F)
SLT+ -SLT- : 10.0-14.0 volts (Ignition SW on)

**A4 A/T Indicator Light SW**

2-6 : Closed with the shift lever in P position
2-1 : Closed with the shift lever in R position
2-9 : Closed with the shift lever in N position
2-7 : Closed with the shift lever in D position
2-8 : Closed with the shift lever in L position
2-3 : Closed with the shift lever in 2 position

### : Parts Location

| Code | See Page | Code | See Page | Code | See Page |
|---|---|---|---|---|---|
| A4 | 38 (*2) | E4 | 38 (*2) | J1 | 41 |
| A36 | 40 | E6 A | 40 | J2 | 41 |
| C2 | 38 (*2) | E7 B | 40 | S1 | 39 (*2) |
| C7 A | 40 | E9 D | 40 | S14 | 41 |
| C8 B | 40 | E10 E | 40 | T4 | 39 (*2) |
| E3 | 38 (*2) | I15 | 41 | T12 | 39 (*2) |

### : Relay Blocks

| Code | See Page | Relay Blocks (Relay Block Location) |
|---|---|---|
| 1 | 22 | Engine Room R/B (Engine Compartment Left) |

### : Junction Block and Wire Harness Connector

| Code | See Page | Junction Block and Wire Harness (Connector Location) |
|---|---|---|
| 1B | 25 | Engine Room Main Wire and Engine Room J/B (Engine Compartment Left) |
| 1C | | |
| 1H | | |
| 1J | | |
| 1K | 25 | Engine Wire and Engine Room J/B (Engine Compartment Left) |
| 2A | 28 | Instrument Panel Wire and Driver Side J/B (Lower Finish Panel) |
| 2B | | |
| 2E | 28 | Engine Room Main Wire and Driver Side J/B (Lower Finish Panel) |
| 2G | | |
| 2L | 29 | Instrument Panel Wire and Driver Side J/B (Lower Finish Panel) |
| 2M | | |
| 2O | | |
| 2R | | |
| 3A | 34 | Instrument Panel Wire and Passenger Side J/B (Instrument Panel Brace RH) |
| 3B | | |

### : Connector Joining Wire Harness and Wire Harness

| Code | See Page | Joining Wire Harness and Wire Harness (Connector Location) |
|---|---|---|
| IF1 | 50 | Engine Room Main Wire and Instrument Panel Wire (Right Side of Steering Column Tube) |
| IF4 | | |
| IJ1 | 52 | Instrument Panel Wire and Instrument Panel Wire (Instrument Panel Reinforcement RH) |
| IL1 | 52 | Engine Wire and Instrument Panel Wire (Behind the Glove Box) |
| IL2 | | |

### : Ground Points

| Code | See Page | Ground Points Location |
|---|---|---|
| EC | 48 (*2) | Left Fender |
| ED | | |
| EG | 48 (*2) | Left Side of Cylinder Head |
| EH | 48 (*2) | Intake Side of Cylinder Block |
| II | 50 | Cowl Side Panel LH |
| IJ | 50 | Instrument Panel Brace LH |

### : Splice Points

| Code | See Page | Wire Harness with Splice Points | Code | See Page | Wire Harness with Splice Points |
|---|---|---|---|---|---|
| I1 | 52 | Engine Room Main Wire | I10 | 52 | Engine Room Main Wire |
| I6 | 52 | Engine Wire | | | |

* 1 : 1MZ-FE, 3MZ-FE * 2 : 2AZ-FE * 3 : w/ Power Seat * 4 : w/o Power Seat

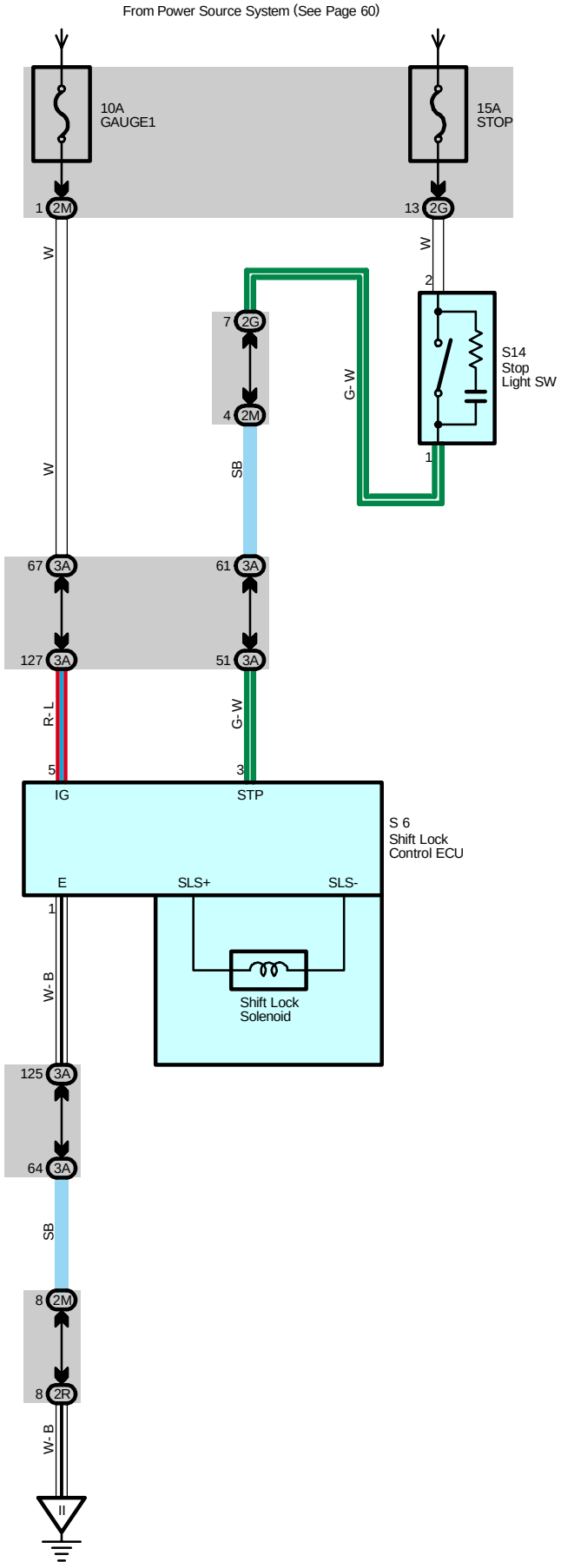
From Power Source System (See Page 60)
10A
GAUGE1
15A
STOP
1
2M
13
2G
W
W
2
7
2G
4
2M
G- W
S14
Stop
Light SW
1
SB
W
67
3A
61
3A
127
3A
51
3A
R- L
G- W
5
3
IG
STP
S 6
Shift Lock
Control ECU
E
SLS+
SLS-
1
W- B
Shift Lock
Solenoid
125
3A
64
3A
SB
8
2M
8
2R
W- B

## System Outline

**Shift Lock Mechanism**

If the brake pedal is depressed with the ignition SW set at ON (The stop light SW is on), the shift lock control ECU is activated, allowing the driver to change the shift lever to a position other than the P position.

## Service Hints

**S6 Shift Lock Control ECU**

5-Ground : Approx. 12 volts with the ignition SW at ON or ST position
1-Ground : Always continuity

**○ : Parts Location**

| Code | See Page | Code | See Page | Code | See Page |
|---|---|---|---|---|---|
| S6 | 41 | S14 | 41 | | |

**⬭ : Junction Block and Wire Harness Connector**

| Code | See Page | Junction Block and Wire Harness (Connector Location) |
|---|---|---|
| 2G | 28 | Engine Room Main Wire and Driver Side J/B (Lower Finish Panel) |
| 2M | 29 | Instrument Panel Wire and Driver Side J/B (Lower Finish Panel) |
| 2R | | |
| 3A | 34 | Instrument Panel Wire and Passenger Side J/B (Instrument Panel Brace RH) |

**▽ : Ground Points**

| Code | See Page | Ground Points Location |
|---|---|---|
| II | 50 | Cowl Side Panel LH |

* 1 : 1MZ-FE, 3MZ-FE * 2 : 2AZ-FE * 3 : w/ Power Seat * 4 : w/o Power Seat

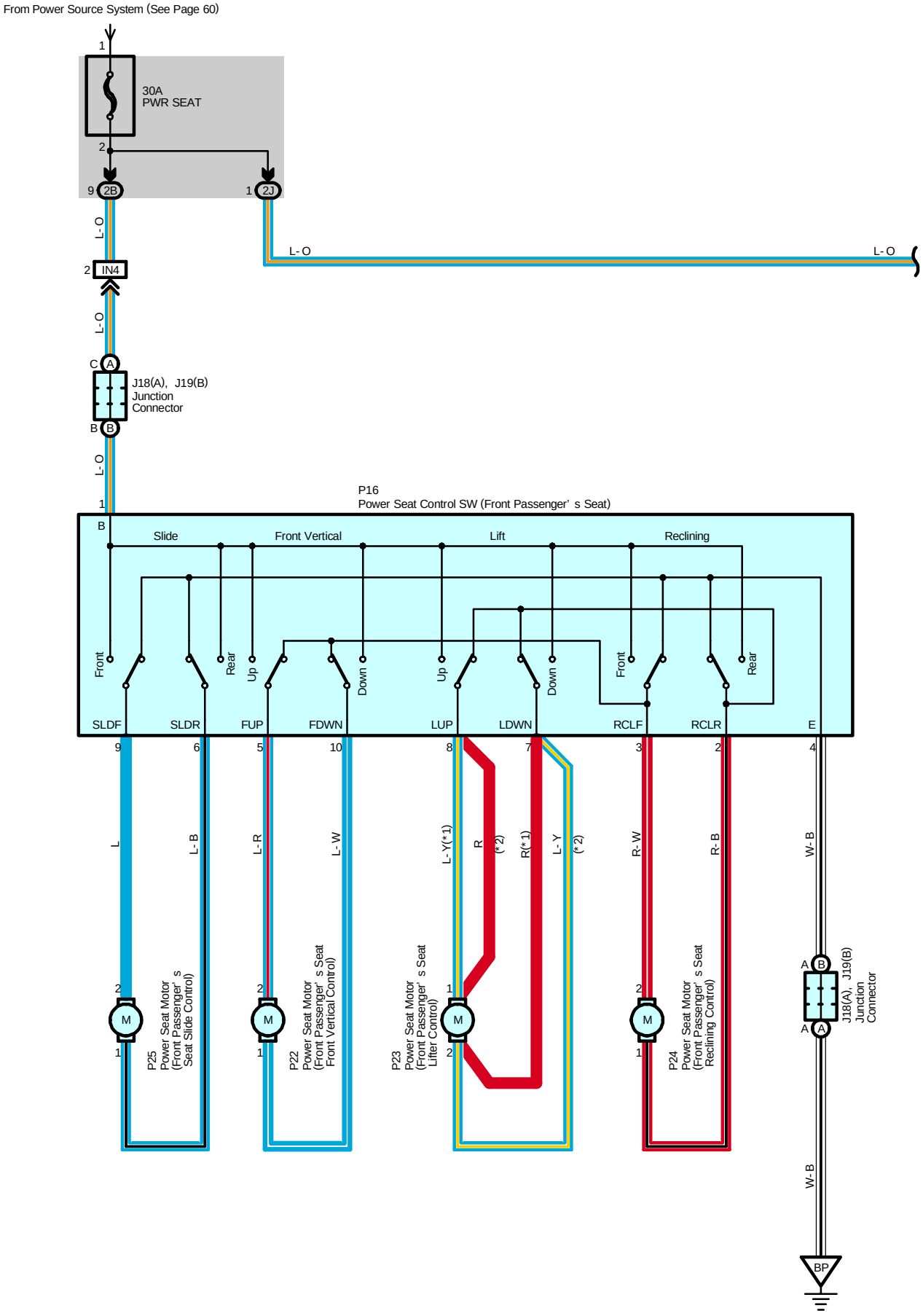
From Power Source System (See Page 60)
30A
PWR SEAT
2B
2J
L-O
IN4
J18(A), J19(B)
Junction
Connector
P16
Power Seat Control SW (Front Passenger' s Seat)
Slide
Front Vertical
Lift
Reclining
Front
Rear
Up
Down
SLDF
SLDR
FUP
FDWN
LUP
LDWN
RCLF
RCLR
E
L
L-B
L-R
L-W
L-Y(*1)
R (*2)
R(*1)
L-Y (*2)
R-W
R-B
W-B
P25
Power Seat Motor
(Front Passenger' s
Seat Slide Control)
P22
Power Seat Motor
(Front Passenger' s Seat
Front Vertical Control)
P23
Power Seat Motor
(Front Passenger' s Seat
Lifter Control)
P24
Power Seat Motor
(Front Passenger' s Seat
Reclining Control)
J18(A), J19(B)
Junction
Connector
BP

* 1 : TMC Made
* 2 : TMMK Made

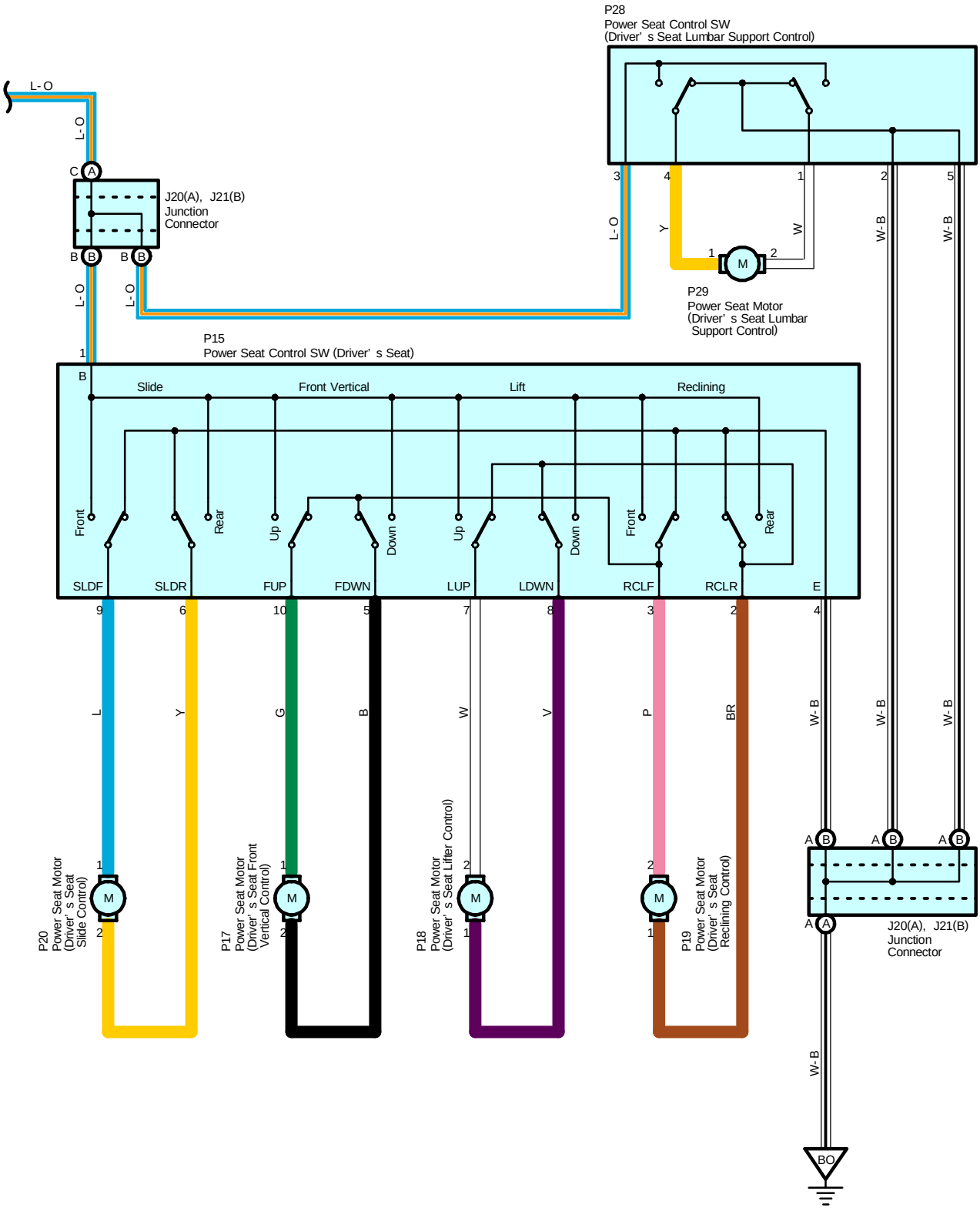

# Power Seat

**Service Hints**

**P15 Power Seat Control SW (Driver's Seat)**

1-Ground : Always approx. 12 volts
4-Ground : Always continuity

**P16 Power Seat Control SW (Front Passenger's Seat)**

1-Ground : Always approx. 12 volts
4-Ground : Always continuity

**○ : Parts Location**

| Code | | See Page | Code | See Page | Code | See Page |
|---|---|---|---|---|---|---|
| J18 | A | 44 (*3) | P16 | 44 (*3) | P24 | 44 (*3) |
| J19 | B | 44 (*3) | P17 | 44 (*3) | P25 | 44 (*3) |
| J20 | A | 44 (*3) | P18 | 44 (*3) | P28 | 44 (*3) |
| | | 45 (*4) | P19 | 44 (*3) | | 45 (*4) |
| J21 | B | 44 (*3) | P20 | 44 (*3) | P29 | 44 (*3) |
| | | 45 (*4) | P22 | 44 (*3) | | 45 (*4) |
| P15 | | 44 (*3) | P23 | 44 (*3) | | |

**⬭ : Junction Block and Wire Harness Connector**

| Code | See Page | Junction Block and Wire Harness (Connector Location) |
|---|---|---|
| 2B | 28 | Instrument Panel Wire and Driver Side J/B (Lower Finish Panel) |
| 2J | 28 | Floor Wire and Driver Side J/B (Lower Finish Panel) |

**▭ : Connector Joining Wire Harness and Wire Harness**

| Code | See Page | Joining Wire Harness and Wire Harness (Connector Location) |
|---|---|---|
| IN4 | 52 | Instrument Panel Wire and Floor No.2 Wire (Right Kick Panel) |

**▽ : Ground Points**

| Code | See Page | Ground Points Location |
|---|---|---|
| BO | 54 | Under the Driver's Seat |
| BP | 54 | Under the Front Passenger's Seat |

* 1 : 1MZ-FE, 3MZ-FE * 2 : 2AZ-FE * 3 : w/ Power Seat * 4 : w/o Power Seat

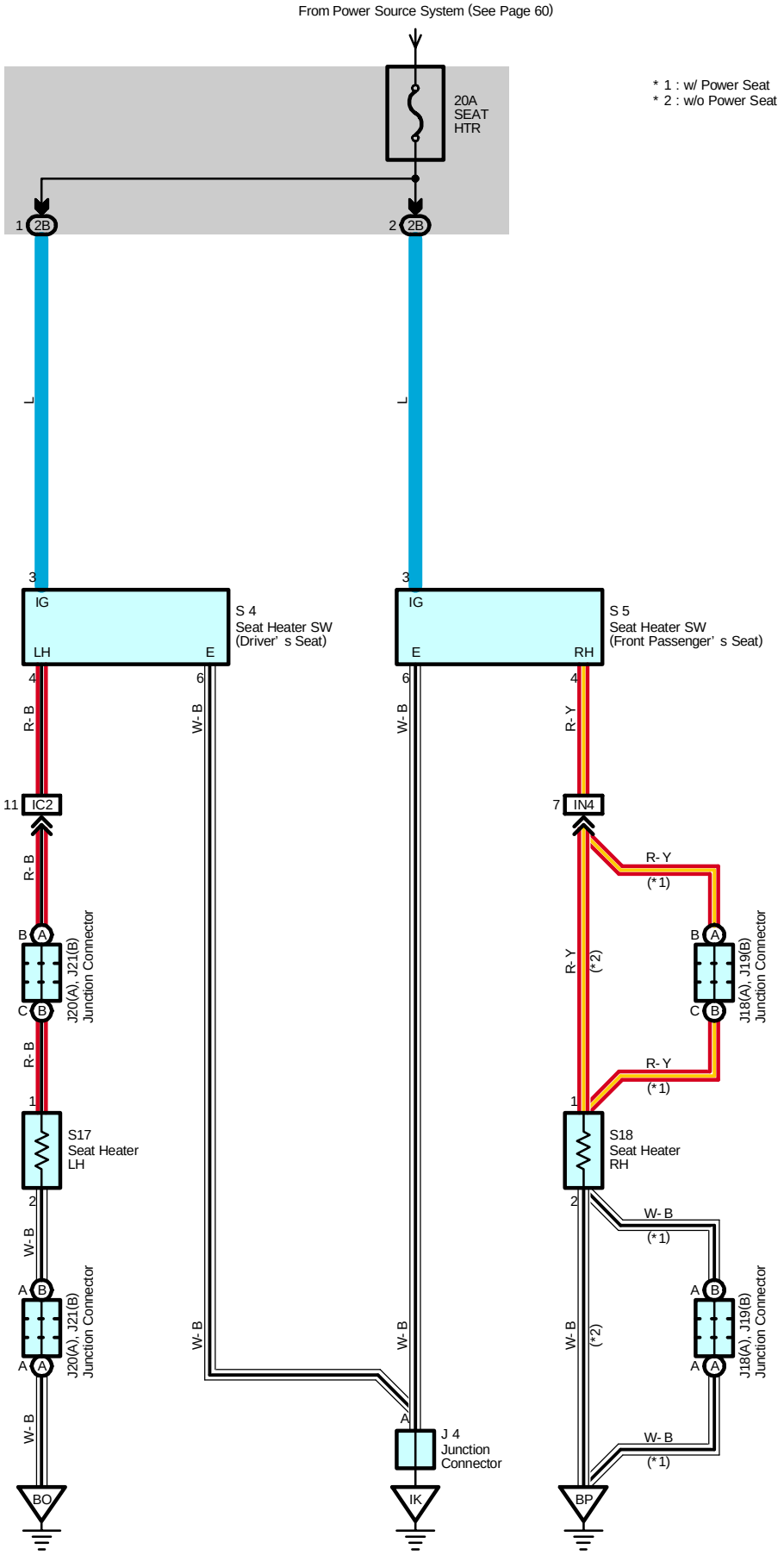
From Power Source System (See Page 60)
* 1 : w/ Power Seat
* 2 : w/o Power Seat
20A
SEAT
HTR
1 2B
2 2B
L
L
3
IG
LH
E
S 4
Seat Heater SW
(Driver' s Seat)
3
IG
E
RH
S 5
Seat Heater SW
(Front Passenger' s Seat)
4
R- B
6
W- B
6
W- B
4
R- Y
11 IC2
7 IN4
R- B
R- Y
(*1)
B A
C B
J20(A), J21(B)
Junction Connector
R- B
R- Y
(*2)
B A
C B
J18(A), J19(B)
Junction Connector
R- Y
(*1)
1
S17
Seat Heater
LH
1
S18
Seat Heater
RH
2
W- B
2
W- B
(*1)
A B
A A
J20(A), J21(B)
Junction Connector
W- B
W- B
(*2)
A B
A A
J18(A), J19(B)
Junction Connector
W- B
(*1)
W- B
W- B
A
J 4
Junction
Connector
BO
IK
BP

**Service Hints**

**S4 Seat Heater SW (Driver's Seat)**

3-Ground : Approx. 12 volts with the ignition SW at ON or ST position
6-Ground : Always continuity

**S5 Seat Heater SW (Front Passenger's Seat)**

3-Ground : Approx. 12 volts with the ignition SW at ON or ST position
6-Ground : Always continuity

**: Parts Location**

| Code | | See Page | Code | | See Page | Code | See Page |
|---|---|---|---|---|---|---|---|
| J4 | | 41 | J20 | A | 45 (*4) | S5 | 41 |
| J18 | A | 44 (*3) | J21 | B | 44 (*3) | S17 | 44 (*3) |
| J19 | B | 44 (*3) | | | 45 (*4) | S18 | 44 (*3) |
| J20 | A | 44 (*3) | S4 | | 41 | | 45 (*4) |

**: Junction Block and Wire Harness Connector**

| Code | See Page | Junction Block and Wire Harness (Connector Location) |
|---|---|---|
| 2B | 28 | Instrument Panel Wire and Driver Side J/B (Lower Finish Panel) |

**: Connector Joining Wire Harness and Wire Harness**

| Code | See Page | Joining Wire Harness and Wire Harness (Connector Location) |
|---|---|---|
| IC2 | 50 | Instrument Panel Wire and Floor Wire (Left Kick Panel) |
| IN4 | 52 | Instrument Panel Wire and Floor No.2 Wire (Right Kick Panel) |

**: Ground Points**

| Code | See Page | Ground Points Location |
|---|---|---|
| IK | 50 | Instrument Panel Brace LH |
| BO | 54 | Under the Driver's Seat |
| BP | 54 | Under the Front Passenger's Seat |

* 1 : 1MZ-FE, 3MZ-FE * 2 : 2AZ-FE * 3 : w/ Power Seat * 4 : w/o Power Seat

# Seat Belt Warning

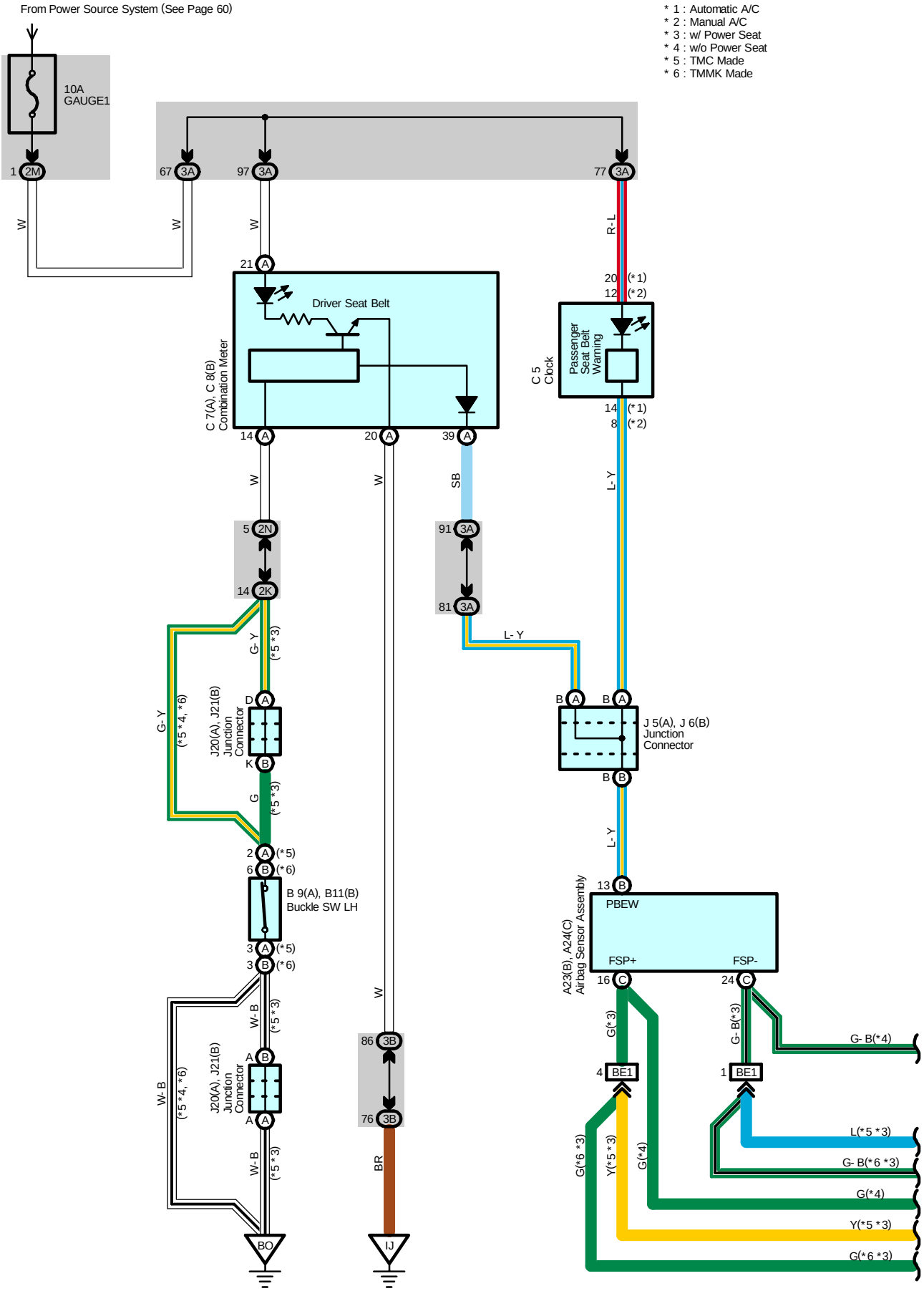

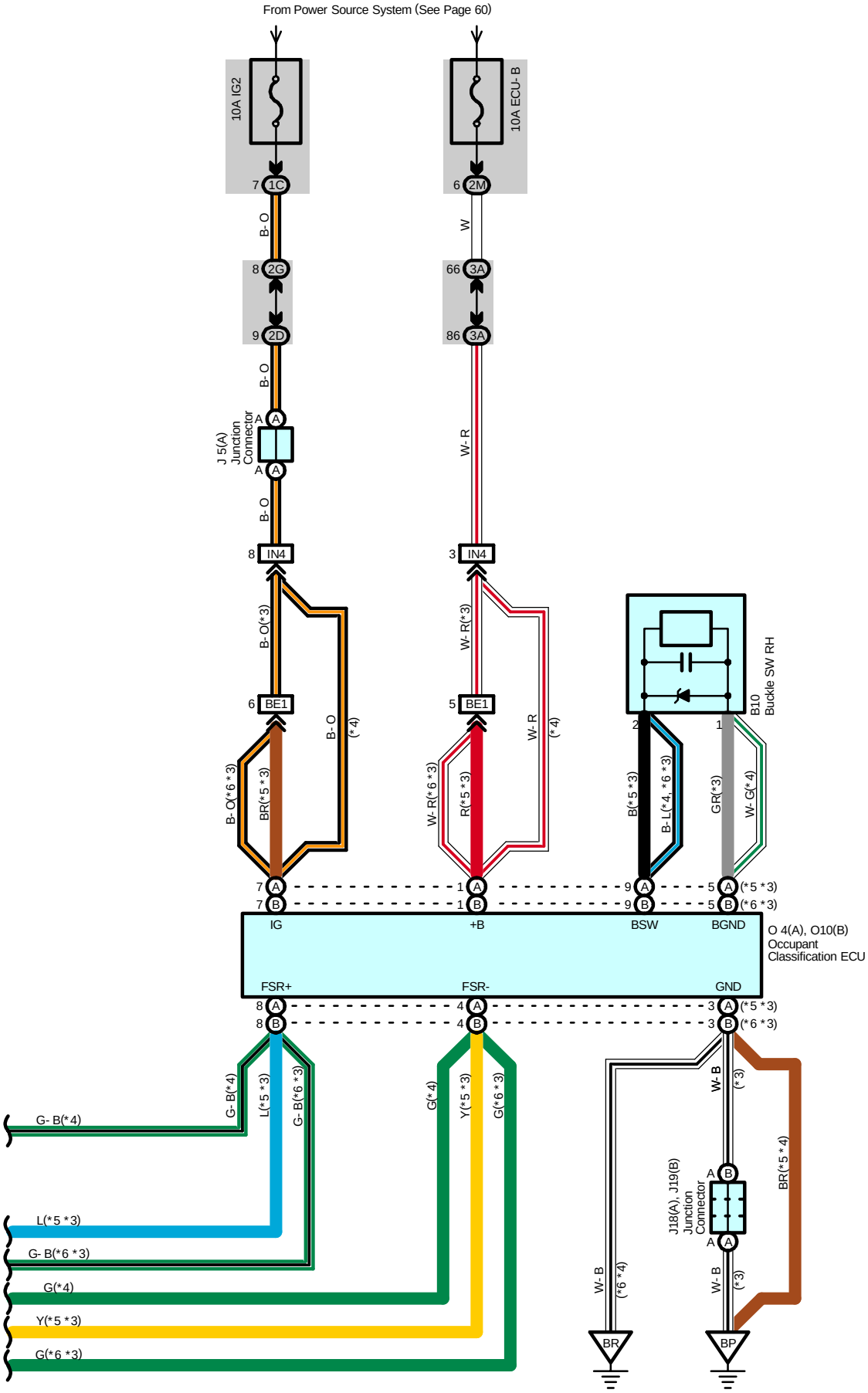
From Power Source System (See Page 60)
10A IG2
10A ECU- B
7 1C
6 2M
B- O
W
8 2G
66 3A
9 2D
86 3A
B- O
W- R
J 5(A) Junction Connector
A A
A A
B- O
8 IN4
3 IN4
B- O(*3)
W- R(*3)
6 BE1
5 BE1
B- O
(*4)
W- R
(*4)
B10 Buckle SW RH
2
1
B- O(*6 *3)
BR(*5 *3)
W- R(*6 *3)
R(*5 *3)
B(*5 *3)
B- L(*4, *6 *3)
GR(*3)
W- G(*4)
7 A
7 B
1 A
1 B
9 A
9 B
5 A (*5 *3)
5 B (*6 *3)
IG
+B
BSW
BGND
O 4(A), O10(B) Occupant Classification ECU
FSR+
FSR-
GND
8 A
8 B
4 A
4 B
3 A (*5 *3)
3 B (*6 *3)
G- B(*4)
L(*5 *3)
G- B(*6 *3)
G(*4)
Y(*5 *3)
G(*6 *3)
W- B
(*3)
BR(*5 *4)
J18(A), J19(B) Junction Connector
A B
A A
W- B
(*6 *4)
W- B
(*3)
BR
BP

# Seat Belt Warning

## System Outline

When the driver has not fastened the seat belt while the ignition SW is ON, the driver seat belt warning light blinks, and a warning buzzer comes on.
Also, in the front passenger seat, a sensor recognizes passenger, and when the passenger has not fastened the seat belt, the front passenger seat belt warning light blinks.

## Service Hints

**B9 Buckle SW (Driver's Seat)**

2-3 : Opened with the driver's seat belt in use

### ○ : Parts Location

| Code | | See Page | Code | | See Page | Code | | See Page |
|---|---|---|---|---|---|---|---|---|
| A23 | B | 40 | B11 | B | 45 (*4) | J19 | B | 44 (*3) |
| A24 | C | 40 | C5 | | 40 | J20 | A | 44 (*3) |
| B9 | A | 44 (*3) | C7 | A | 40 | | | 45 (*4) |
| | | 45 (*4) | C8 | B | 40 | J21 | B | 44 (*3) |
| B10 | | 44 (*3) | J5 | A | 41 | | | 45 (*4) |
| | | 45 (*4) | J6 | B | 41 | O4 | A | 44 (*3) |
| B11 | B | 44 (*3) | J18 | A | 44 (*3) | O10 | B | 45 (*4) |

### : Junction Block and Wire Harness Connector

| Code | See Page | Junction Block and Wire Harness (Connector Location) |
|---|---|---|
| 1C | 25 | Engine Room Main Wire and Engine Room J/B (Engine Compartment Left) |
| 2D | 28 | Instrument Panel Wire and Driver Side J/B (Lower Finish Panel) |
| 2G | 28 | Engine Room Main Wire and Driver Side J/B (Lower Finish Panel) |
| 2K | 28 | Floor Wire and Driver Side J/B (Lower Finish Panel) |
| 2M | 29 | Instrument Panel Wire and Driver Side J/B (Lower Finish Panel) |
| 2N | | |
| 3A | 34 | Instrument Panel Wire and Passenger Side J/B (Instrument Panel Brace RH) |
| 3B | | |

### : Connector Joining Wire Harness and Wire Harness

| Code | See Page | Joining Wire Harness and Wire Harness (Connector Location) |
|---|---|---|
| IN4 | 52 | Instrument Panel Wire and Floor No.2 Wire (Right Kick Panel) |
| BE1 | 56 | Floor No.2 Wire and Front Seat RH Wire (Under the Front Passenger's Seat) |

### ▽ : Ground Points

| Code | See Page | Ground Points Location |
|---|---|---|
| IJ | 50 | Instrument Panel Brace LH |
| BO | 54 | Under the Driver's Seat |
| BP | 54 | Under the Front Passenger's Seat |
| BR | 54 | Front Side of Rear Quarter Wheel House RH |

* 1 : 1MZ-FE, 3MZ-FE * 2 : 2AZ-FE * 3 : w/ Power Seat * 4 : w/o Power Seat

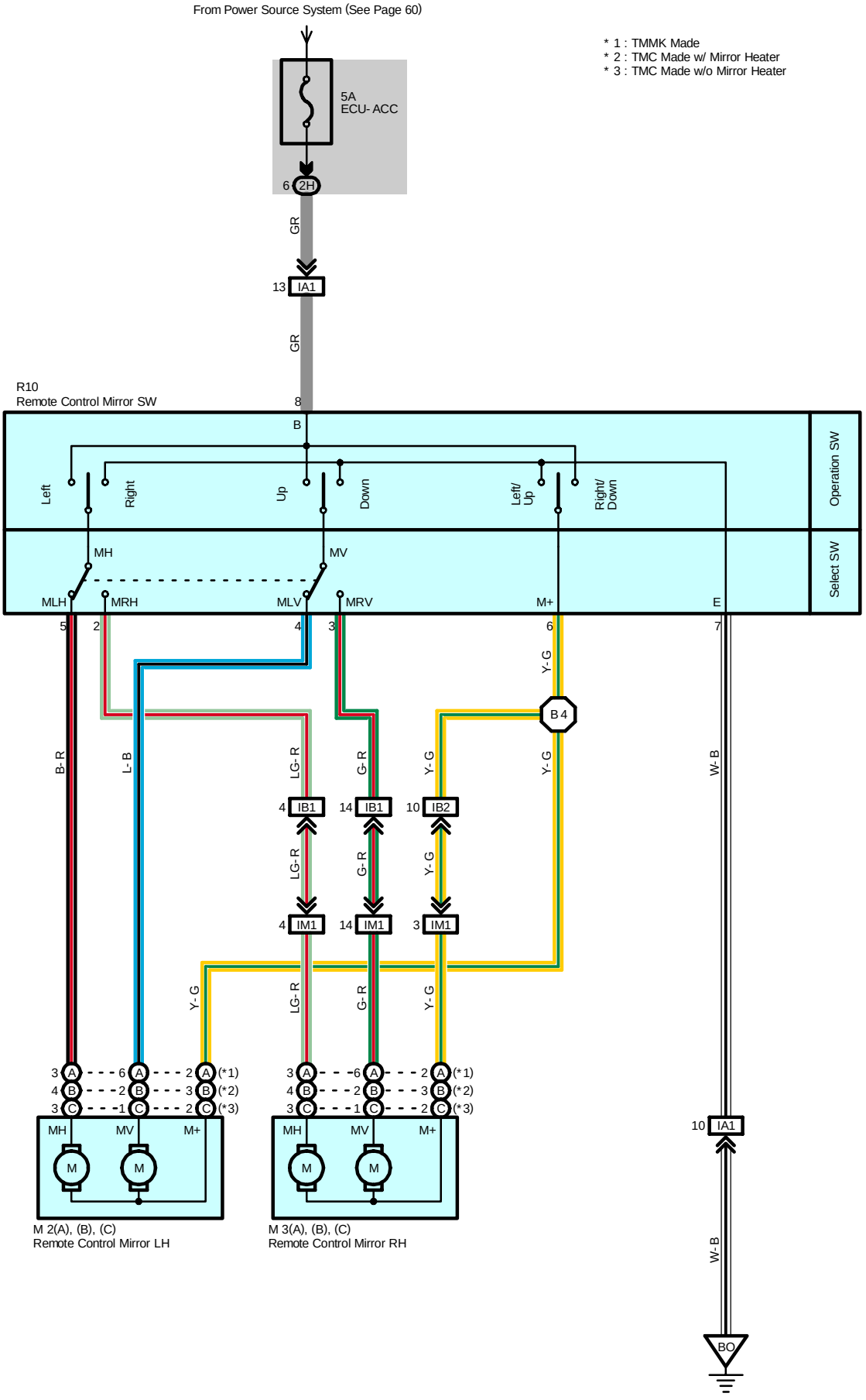
From Power Source System (See Page 60)
* 1 : TMMK Made
* 2 : TMC Made w/ Mirror Heater
* 3 : TMC Made w/o Mirror Heater
5A
ECU- ACC
6 2H
GR
13 IA1
GR
R10
Remote Control Mirror SW
8
B
Operation SW
Select SW
Left
Right
Up
Down
Left/ Up
Right/ Down
MH
MV
MLH
MRH
MLV
MRV
M+
E
5
2
4
3
6
7
Y- G
B 4
B- R
L- B
LG- R
G- R
Y- G
Y- G
W- B
4 IB1
14 IB1
10 IB2
LG- R
G- R
Y- G
4 IM1
14 IM1
3 IM1
Y- G
LG- R
G- R
Y- G
3 A
4 B
3 C
6 A
2 B
1 C
2 A (*1)
3 B (*2)
2 C (*3)
MH
MV
M+
M
M
M 2(A), (B), (C)
Remote Control Mirror LH
M 3(A), (B), (C)
Remote Control Mirror RH
10 IA1
W- B
BO

**Service Hints**

**R10 Remote Control Mirror SW**

8-Ground : Approx. 12 volts with the ignition SW at ACC or ON position
7-Ground : Always continuity
8-6 : Continuity with the operation SW at DOWN or RIGHT position
6-7 : Continuity with the operation SW at UP or LEFT position

**: Parts Location**

| Code | | See Page | Code | | See Page | Code | See Page |
|---|---|---|---|---|---|---|---|
| M2 | A | 43 | M3 | A | 43 | R10 | 43 |
| | B | 43 | | B | 43 | | |
| | C | 43 | | C | 43 | | |

**: Junction Block and Wire Harness Connector**

| Code | See Page | Junction Block and Wire Harness (Connector Location) |
|---|---|---|
| 2H | 28 | Floor Wire and Driver Side J/B (Lower Finish Panel) |

**: Connector Joining Wire Harness and Wire Harness**

| Code | See Page | Joining Wire Harness and Wire Harness (Connector Location) |
|---|---|---|
| IA1 | 50 | Front Door LH Wire and Floor Wire (Left Kick Panel) |
| IB1 | 50 | Front Door LH Wire and Instrument Panel Wire (Left Kick Panel) |
| IB2 | | |
| IM1 | 52 | Front Door RH Wire and Instrument Panel Wire (Right Kick Panel) |

**: Ground Points**

| Code | See Page | Ground Points Location |
|---|---|---|
| BO | 54 | Under the Driver's Seat |

**: Splice Points**

| Code | See Page | Wire Harness with Splice Points | Code | See Page | Wire Harness with Splice Points |
|---|---|---|---|---|---|
| B4 | 54 | Front Door LH Wire | | | |

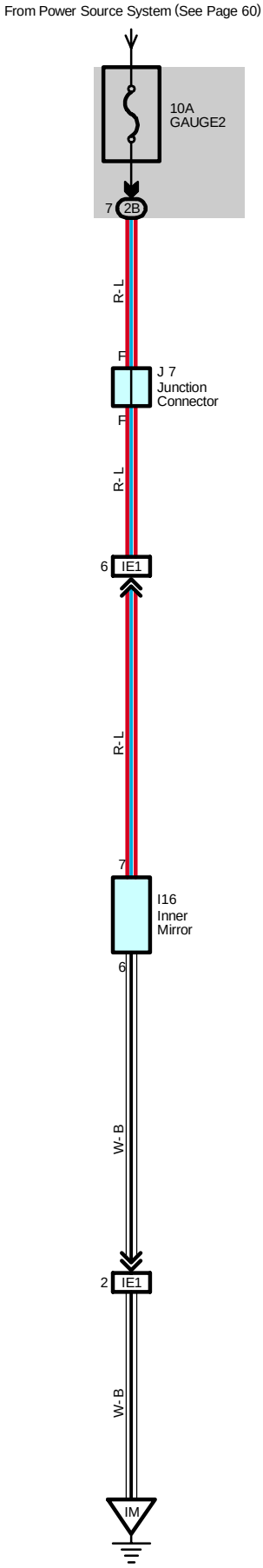
From Power Source System (See Page 60)
10A
GAUGE2
7
2B
R-L
F
J 7
Junction
Connector
F
R-L
6
IE1
R-L
7
I16
Inner
Mirror
6
W-B
2
IE1
W-B
IM

**Service Hints**

**I16 Inner Mirror**

7-Ground : Approx. 12 volts with the ignition SW at ON or ST position

6-Ground : Always continuity

**: Parts Location**

| Code | See Page | Code | See Page | Code | See Page |
|---|---|---|---|---|---|
| I16 | 42 | J7 | 41 | | |

**: Junction Block and Wire Harness Connector**

| Code | See Page | Junction Block and Wire Harness (Connector Location) |
|---|---|---|
| 2B | 28 | Instrument Panel Wire and Driver Side J/B (Lower Finish Panel) |

**: Connector Joining Wire Harness and Wire Harness**

| Code | See Page | Joining Wire Harness and Wire Harness (Connector Location) |
|---|---|---|
| IE1 | 50 | Instrument Panel Wire and Roof Wire (Inside of Front Left Pillar) |

**: Ground Points**

| Code | See Page | Ground Points Location |
|---|---|---|
| IM | 50 | Instrument Panel Reinforcement RH |

# Garage Door Opener

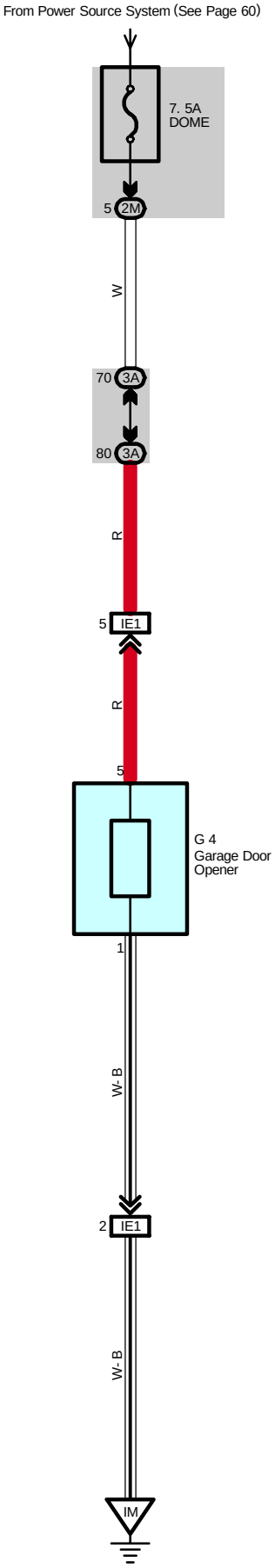

**Service Hints**

**G4 Garage Door Opener**

5-Ground : Always approx. 12 volts

1-Ground : Always continuity

**: Parts Location**

| Code | See Page | Code | See Page | Code | See Page |
|---|---|---|---|---|---|
| G4 | 42 | | | | |

**: Junction Block and Wire Harness Connector**

| Code | See Page | Junction Block and Wire Harness (Connector Location) |
|---|---|---|
| 2M | 29 | Instrument Panel Wire and Driver Side J/B (Lower Finish Panel) |
| 3A | 34 | Instrument Panel Wire and Passenger Side J/B (Instrument Panel Brace RH) |

**: Connector Joining Wire Harness and Wire Harness**

| Code | See Page | Joining Wire Harness and Wire Harness (Connector Location) |
|---|---|---|
| IE1 | 50 | Instrument Panel Wire and Roof Wire (Inside of Front Left Pillar) |

**: Ground Points**

| Code | See Page | Ground Points Location |
|---|---|---|
| IM | 50 | Instrument Panel Reinforcement RH |

* 1 : 1MZ-FE, 3MZ-FE * 2 : 2AZ-FE * 3 : w/ Power Seat * 4 : w/o Power Seat

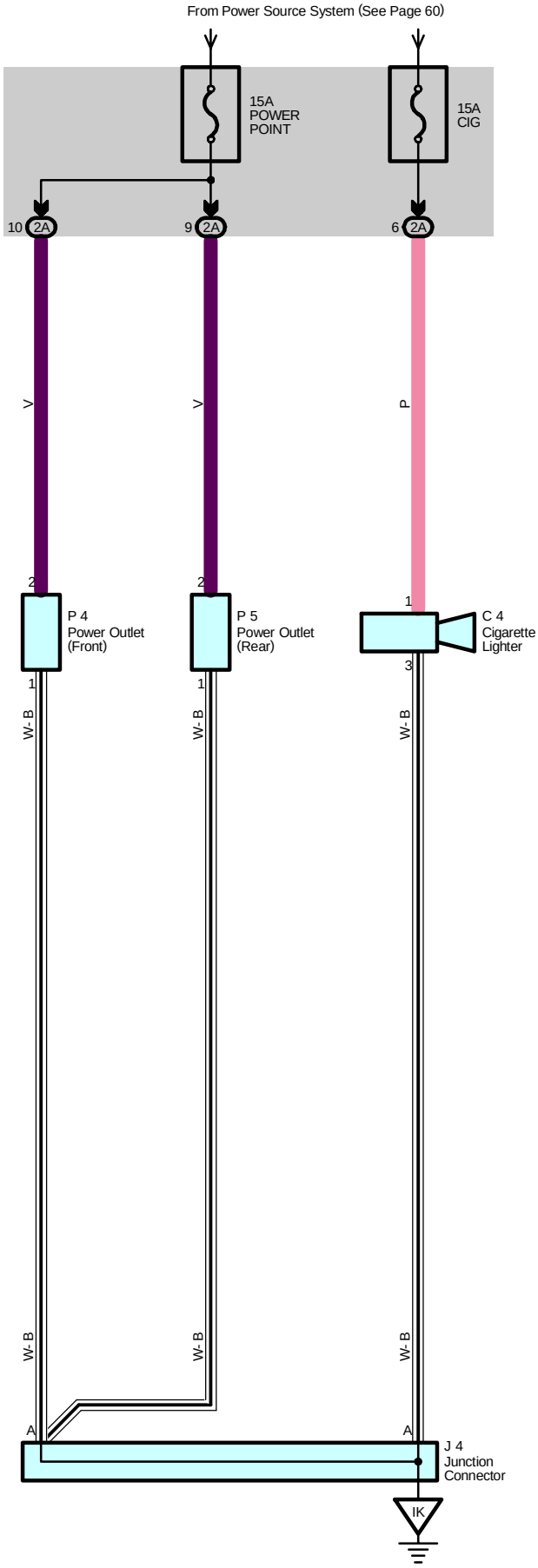
From Power Source System (See Page 60)
15A
POWER
POINT
15A
CIG
10
2A
9
2A
6
2A
V
V
P
2
2
1
P 4
Power Outlet
(Front)
P 5
Power Outlet
(Rear)
C 4
Cigarette
Lighter
3
1
1
W- B
W- B
W- B
W- B
W- B
A
A
J 4
Junction
Connector
IK

**Service Hints**

**C4 Cigarette Lighter**

1-Ground : Approx. 12 volts with the ignition SW at ACC or ON position
3-Ground : Always continuity

**P4 Power Outlet (Front)**

2-Ground : Approx. 12 volts with the ignition SW at ACC or ON position
1-Ground : Always continuity

**P5 Power Outlet (Rear)**

2-Ground : Approx. 12 volts with the ignition SW at ACC or ON position
1-Ground : Always continuity

**○ : Parts Location**

| Code | See Page | Code | See Page | Code | See Page |
|---|---|---|---|---|---|
| C4 | 40 | P4 | 41 | | |
| J4 | 41 | P5 | 41 | | |

**⬭ : Junction Block and Wire Harness Connector**

| Code | See Page | Junction Block and Wire Harness (Connector Location) |
|---|---|---|
| 2A | 28 | Instrument Panel Wire and Driver Side J/B (Lower Finish Panel) |

**▽ : Ground Points**

| Code | See Page | Ground Points Location |
|---|---|---|
| IK | 50 | Instrument Panel Brace LH |

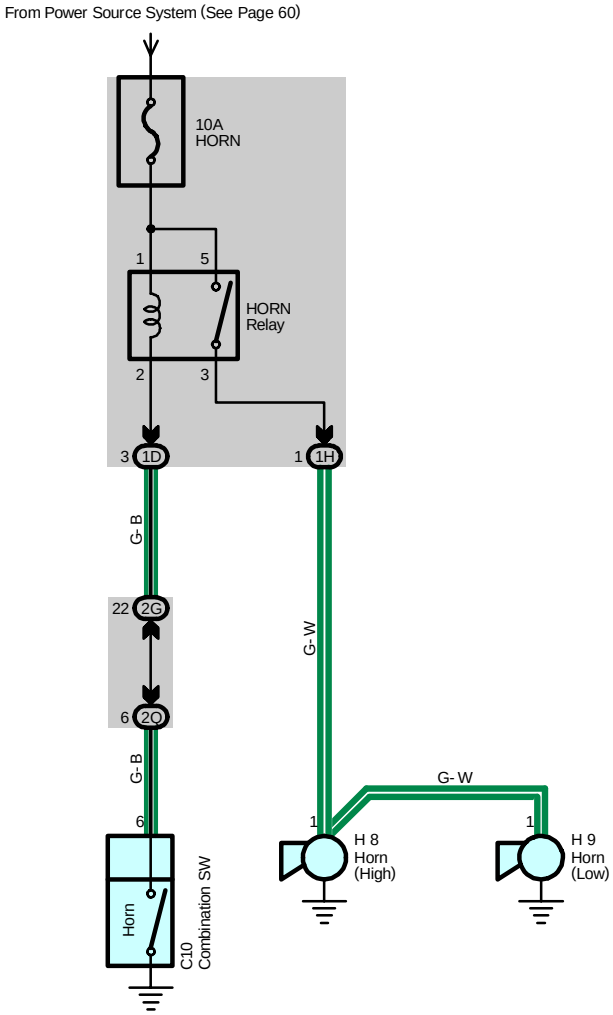
From Power Source System (See Page 60)
10A
HORN
1
5
HORN
Relay
2
3
3
1D
1
1H
G-B
22
2G
G-W
6
2Q
G-B
6
G-W
1
1
H 8
Horn
(High)
1
H 9
Horn
(Low)
Horn
C10
Combination SW

**Service Hints**

**HORN Relay**

5-3 : Closed with the horn SW on

**: Parts Location**

| Code | See Page | Code | See Page | Code | See Page |
|---|---|---|---|---|---|
| C10 | 40 | H8 | 38 (*2) | H9 | 38 (*2) |
| H8 | 36 (*1) | H9 | 36 (*1) | | |

**: Junction Block and Wire Harness Connector**

| Code | See Page | Junction Block and Wire Harness (Connector Location) |
|---|---|---|
| 1D | 25 | Engine Room Main Wire and Engine Room J/B (Engine Compartment Left) |
| 1H | | |
| 2G | 28 | Engine Room Main Wire and Driver Side J/B (Lower Finish Panel) |
| 2Q | 29 | Instrument Panel Wire and Driver Side J/B (Lower Finish Panel) |

* 1 : 1MZ-FE, 3MZ-FE * 2 : 2AZ-FE * 3 : w/ Power Seat * 4 : w/o Power Seat

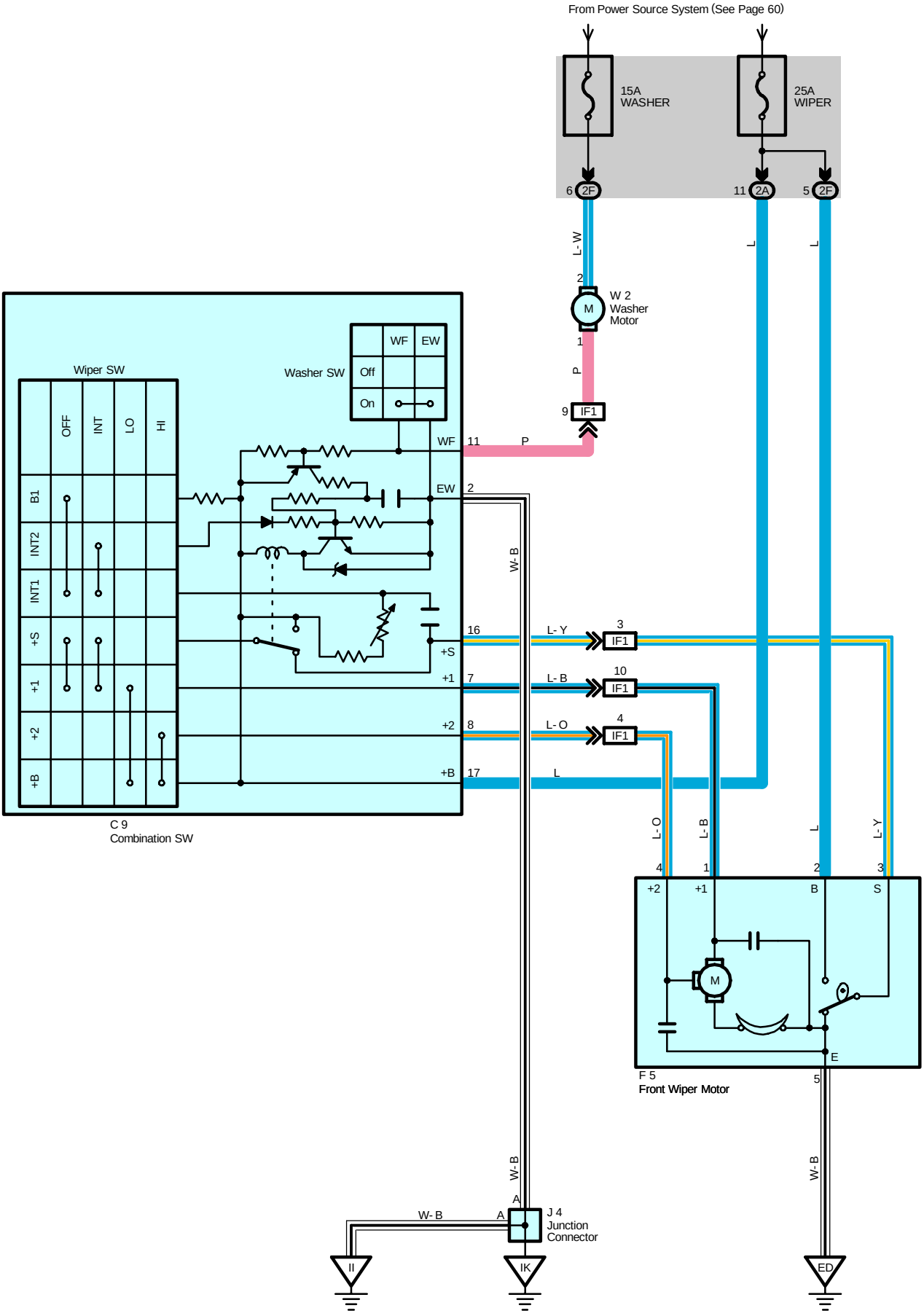
From Power Source System (See Page 60)
15A WASHER
25A WIPER
6 2F
11 2A
5 2F
L-W
L
L
2
M
W 2 Washer Motor
1
P
9 IF1
Wiper SW
Washer SW
WF EW
Off
On
OFF INT LO HI
B1
INT2
INT1
+S
+1
+2
+B
WF 11 P
EW 2
W-B
16 +S
7 +1
8 +2
17 +B
L-Y 3 IF1
L-B 10 IF1
L-O 4 IF1
L
C 9
Combination SW
L-O
L-B
L
L-Y
4 +2
1 +1
2 B
3 S
M
E
F 5
Front Wiper Motor
5
W-B
A
W-B A
J 4
Junction Connector
II
IK
ED

## System Outline

With the ignition SW turned on, the current flows to TERMINAL 17 of the wiper and washer SW and TERMINAL 2 of the front wiper motor through the WIPER fuse. The current flows to TERMINAL 2 of the washer motor through the WASHER fuse.

**1. Low Speed Position**

With the wiper and washer SW turned to LO position, the current flows from TERMINAL 17 of the wiper and washer SW to TERMINAL 7 to TERMINAL 1 of the front wiper motor to TERMINAL 5 to GROUND and causes the front wiper motor to run at low speed.

**2. High Speed Position**

With the wiper and washer SW turned to HI position, the current flows from TERMINAL 17 of the wiper and washer SW to TERMINAL 8 to TERMINAL 4 of the front wiper motor to TERMINAL 5 to GROUND and causes the front wiper motor to run at high speed.

**3. INT Position**

With the wiper and washer SW turned to INT position, the wiper relay operates and current flows from TERMINAL 17 of the wiper and washer SW to TERMINAL 2 to GROUND. This activates the intermittent circuit and the current flows from TERMINAL 17 of the wiper and washer SW to TERMINAL 7 to TERMINAL 1 of the front wiper motor to TERMINAL 5 to GROUND and the wiper operates. Intermittent operation is controlled by a condenser charge and discharge function in the relay.

**4. Washer Interlocking Operation**

With the wiper and washer SW pulled to WASHER position (Washer SW ON position), the current flows from the WASHER fuse to TERMINAL 2 of the washer motor to TERMINAL 1 to TERMINAL 11 of the wiper and washer SW to TERMINAL 2 to GROUND and causes the washer motor to run and the window washer to spray. Simultaneously, current flows from the WIPER fuse to TERMINAL 17 of the wiper and washer SW to TERMINAL 7 to TERMINAL 1 of the front wiper motor to TERMINAL 5 to GROUND, causing the wiper to function.

## Service Hints

**C9 Combination SW**

2-Ground : Always continuity
17-Ground : Approx. 12 volts with the ignition SW at ON or ST position
7-Ground : Approx. 12 volts with the ignition SW on and the wiper and washer SW at LO position
Approx. 12 volts every approx. 1 to 10 seconds intermittently with the ignition SW on and the wiper and washer SW at INT position
16-Ground : Approx. 12 volts with the ignition SW on and unless the front wiper motor at STOP position
8-Ground : Approx. 12 volts with the ignition SW on and the wiper and washer SW at HI position

**F5 Front Wiper Motor**

2-3 : Closed unless the front wiper motor at STOP position

**○ : Parts Location**

| Code | See Page | Code | See Page | Code | See Page |
|---|---|---|---|---|---|
| C9 | 40 | F5 | 38 (*2) | W2 | 37 (*1) |
| F5 | 36 (*1) | J4 | 41 | | 39 (*2) |

**⬭ : Junction Block and Wire Harness Connector**

| Code | See Page | Junction Block and Wire Harness (Connector Location) |
|---|---|---|
| 2A | 28 | Instrument Panel Wire and Driver Side J/B (Lower Finish Panel) |
| 2F | 28 | Engine Room Main Wire and Driver Side J/B (Lower Finish Panel) |

**▭ : Connector Joining Wire Harness and Wire Harness**

| Code | See Page | Joining Wire Harness and Wire Harness (Connector Location) |
|---|---|---|
| IF1 | 50 | Engine Room Main Wire and Instrument Panel Wire (Right Side of Steering Column Tube) |

* 1 : 1MZ-FE, 3MZ-FE * 2 : 2AZ-FE * 3 : w/ Power Seat * 4 : w/o Power Seat

▽ : **Ground Points**

| Code | See Page | Ground Points Location |
|---|---|---|
| ED | 46 (*1) | Left Fender |
| | 48 (*2) | |
| II | 50 | Cowl Side Panel LH |
| IK | 50 | Instrument Panel Brace LH |

* 1 : 1MZ-FE, 3MZ-FE * 2 : 2AZ-FE * 3 : w/ Power Seat * 4 : w/o Power Seat

# Rear Window Defogger and Mirror Heater

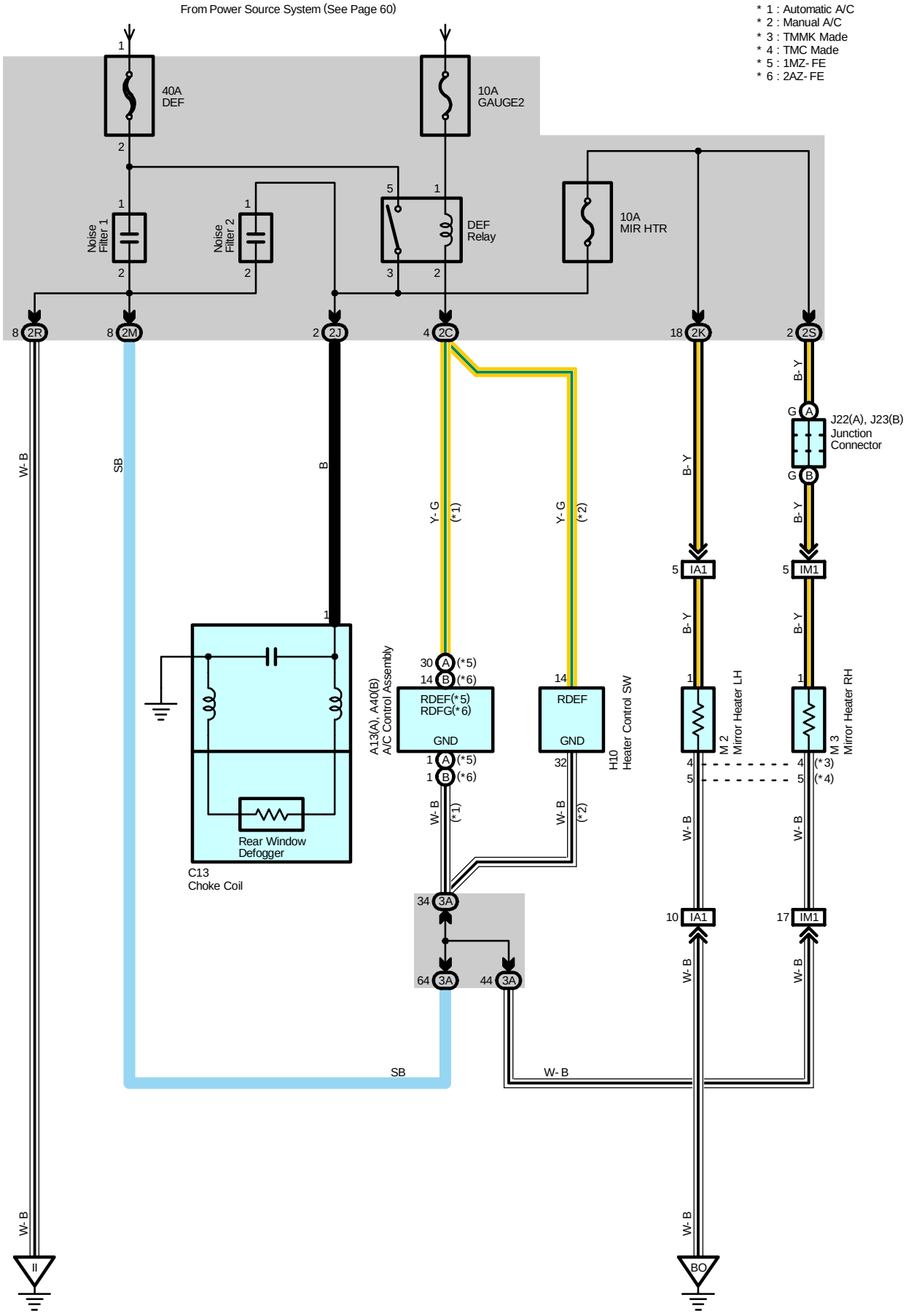

**Service Hints**

**DEF Relay**

5-3 : Closed with the ignition SW at on and rear window defogger SW (A/C control assembly), (Heater control SW) on

**M2, M3 Mirror Heater LH, RH**

1-Ground : Approx. 12 volts with the rear window defogger SW (A/C control assembly), (Heater control SW) on

4 (TMMK Made), 5 (TMC Made)-Ground : Always continuity

**○ : Parts Location**

| Code | | See Page | Code | | See Page | Code | See Page |
|---|---|---|---|---|---|---|---|
| A13 | A | 40 | H10 | | 41 | M2 | 43 |
| A40 | B | 40 | J22 | A | 41 | M3 | 43 |
| C13 | | 42 | J23 | B | 41 | | |

**: Junction Block and Wire Harness Connector**

| Code | See Page | Junction Block and Wire Harness (Connector Location) |
|---|---|---|
| 2C | 28 | Instrument Panel Wire and Driver Side J/B (Lower Finish Panel) |
| 2J | 28 | Floor Wire and Driver Side J/B (Lower Finish Panel) |
| 2K | | |
| 2M | 29 | Instrument Panel Wire and Driver Side J/B (Lower Finish Panel) |
| 2R | | |
| 2S | | |
| 3A | 34 | Instrument Panel Wire and Passenger Side J/B (Instrument Panel Brace RH) |

**: Connector Joining Wire Harness and Wire Harness**

| Code | See Page | Joining Wire Harness and Wire Harness (Connector Location) |
|---|---|---|
| IA1 | 50 | Front Door LH Wire and Floor Wire (Left Kick Panel) |
| IM1 | 52 | Front Door RH Wire and Instrument Panel Wire (Right Kick Panel) |

**: Ground Points**

| Code | See Page | Ground Points Location |
|---|---|---|
| II | 50 | Cowl Side Panel LH |
| BO | 54 | Under the Driver's Seat |

* 1 : 1MZ-FE, 3MZ-FE * 2 : 2AZ-FE * 3 : w/ Power Seat * 4 : w/o Power Seat

# Power Adjustable Pedals

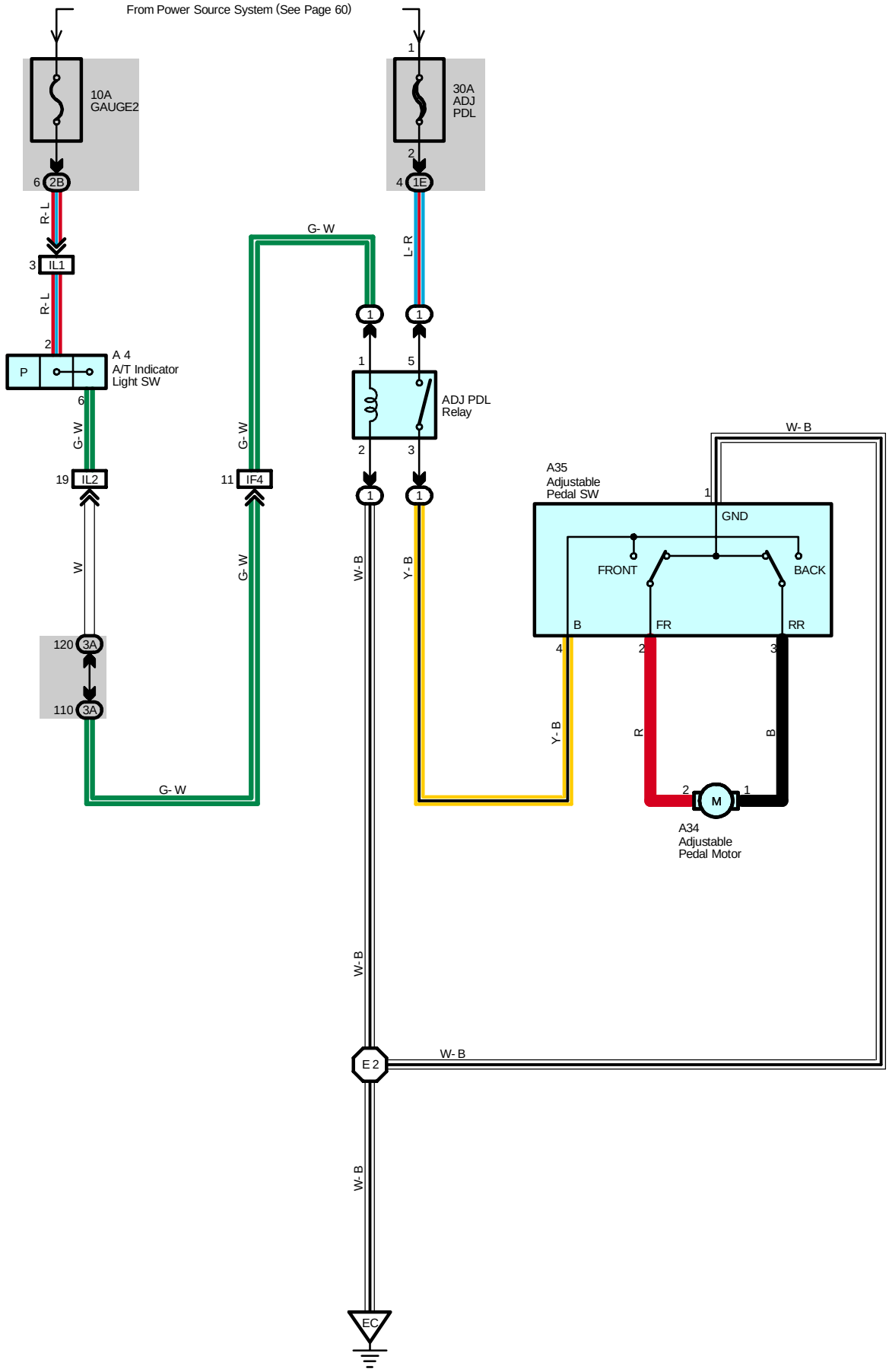

**Service Hints**

**A35 Adjustable Pedal SW**

1-Ground : Always continuity

4-Ground : Approx. 12 volts with the ignition SW at ON position and A/T shift lever at P position

**: Parts Location**

| Code | See Page | Code | See Page | Code | See Page |
|---|---|---|---|---|---|
| A4 | 36 (*1) | A34 | 40 | | |
| | 38 (*2) | A35 | 40 | | |

**: Relay Blocks**

| Code | See Page | Relay Blocks (Relay Block Location) |
|---|---|---|
| 1 | 22 | Engine Room R/B (Engine Compartment Left) |

**: Junction Block and Wire Harness Connector**

| Code | See Page | Junction Block and Wire Harness (Connector Location) |
|---|---|---|
| 1E | 25 | Engine Room Main Wire and Engine Room J/B (Engine Compartment Left) |
| 2B | 28 | Instrument Panel Wire and Driver Side J/B (Lower Finish Panel) |
| 3A | 34 | Instrument Panel Wire and Passenger Side J/B (Instrument Panel Brace RH) |

**: Connector Joining Wire Harness and Wire Harness**

| Code | See Page | Joining Wire Harness and Wire Harness (Connector Location) |
|---|---|---|
| IF4 | 50 | Engine Room Main Wire and Instrument Panel Wire (Right Side of Steering Column Tube) |
| IL1 | 52 | Engine Wire and Instrument Panel Wire (Behind the Glove Box) |
| IL2 | | |

**: Ground Points**

| Code | See Page | Ground Points Location |
|---|---|---|
| EC | 46 (*1) | Left Fender |
| | 48 (*2) | |

**: Splice Points**

| Code | See Page | Wire Harness with Splice Points | Code | See Page | Wire Harness with Splice Points |
|---|---|---|---|---|---|
| E2 | 46 (*1) | Engine Room Main Wire | E2 | 48 (*2) | Engine Room Main Wire |

* 1 : 1MZ-FE, 3MZ-FE * 2 : 2AZ-FE * 3 : w/ Power Seat * 4 : w/o Power Seat

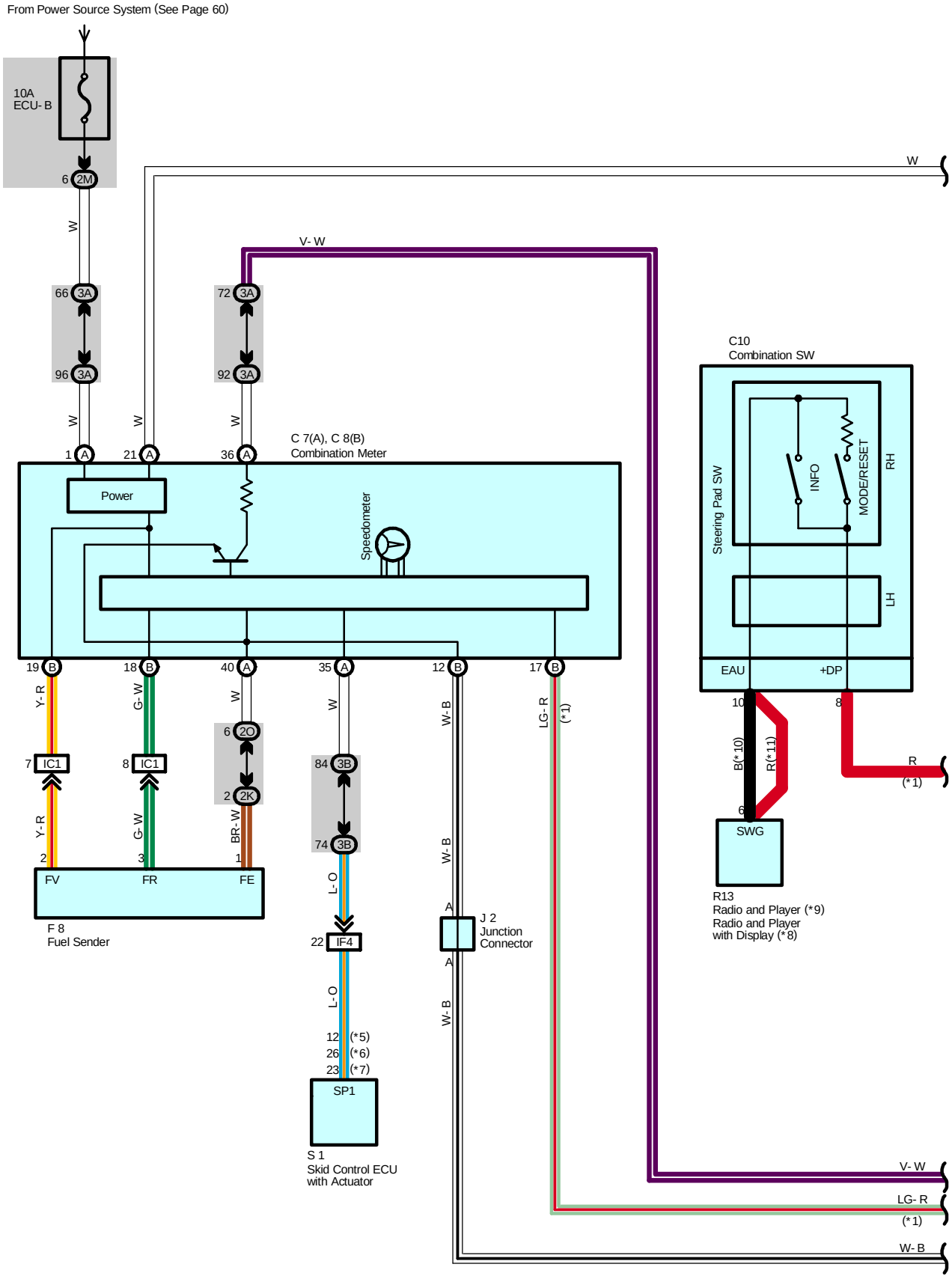
From Power Source System (See Page 60)
10A
ECU- B
6 2M
W
66 3A
96 3A
72 3A
92 3A
V- W
W
1 A
21 A
36 A
C 7(A), C 8(B)
Combination Meter
Power
Speedometer
19 B
18 B
40 A
35 A
12 B
17 B
Y- R
G- W
W
W
W- B
LG- R
(*1)
7 IC1
8 IC1
6 2O
2 2K
84 3B
74 3B
Y- R
G- W
BR- W
L- O
2
3
1
FV
FR
FE
F 8
Fuel Sender
22 IF4
L- O
12 (*5)
26 (*6)
23 (*7)
SP1
S 1
Skid Control ECU
with Actuator
W- B
W- B
A
A
J 2
Junction
Connector
C10
Combination SW
Steering Pad SW
INFO
MODE/RESET
RH
LH
EAU
+DP
10
8
6
B(*10)
R(*11)
R
(*1)
SWG
R13
Radio and Player (*9)
Radio and Player
with Display (*8)
W
V- W
LG- R
(*1)
W- B

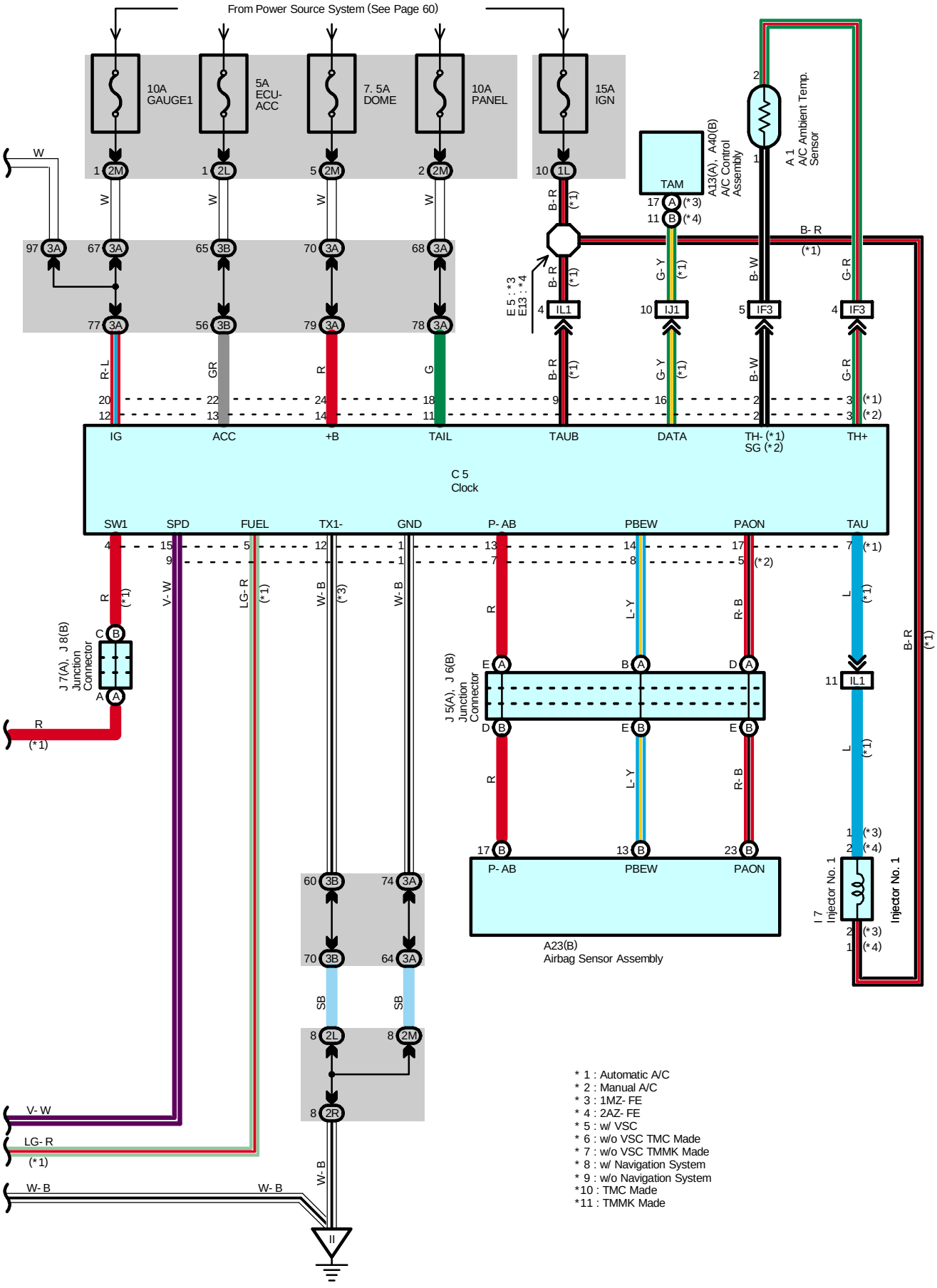
From Power Source System (See Page 60)
10A GAUGE1
5A ECU-ACC
7. 5A DOME
10A PANEL
15A IGN
TAM
A13(A), A40(B) A/C Control Assembly
A 1 A/C Ambient Temp. Sensor
E 5 : *3 E13 : *4
IG
ACC
+B
TAIL
TAUB
DATA
TH- (*1) SG (*2)
TH+
C 5 Clock
SW1
SPD
FUEL
TX1-
GND
P- AB
PBEW
PAON
TAU
J 7(A), J 8(B) Junction Connector
J 5(A), J 6(B) Junction Connector
A23(B) Airbag Sensor Assembly
I 7 Injector No. 1
Injector No. 1
* 1 : Automatic A/C
* 2 : Manual A/C
* 3 : 1MZ- FE
* 4 : 2AZ- FE
* 5 : w/ VSC
* 6 : w/o VSC TMC Made
* 7 : w/o VSC TMMK Made
* 8 : w/ Navigation System
* 9 : w/o Navigation System
*10 : TMC Made
*11 : TMMK Made

# Clock

**Service Hints**

**C5 Clock**

20 (Automatic A/C), 12 (Manual A/C)-Ground : Approx. 12 volts with the ignition SW at ON or ST position
22 (Automatic A/C), 13 (Manual A/C)-Ground : Approx. 12 volts with the ignition SW at ACC or ON position
24 (Automatic A/C), 14 (Manual A/C)-Ground : Always approx. 12 volts
1 (Automatic A/C), 1 (Manual A/C)-Ground : Always continuity

**: Parts Location**

| Code | | See Page | Code | | See Page | Code | | See Page |
|---|---|---|---|---|---|---|---|---|
| A1 | | 36 (*1) | C8 | B | 40 | J6 | B | 41 |
| | | 38 (*2) | C10 | | 40 | J7 | A | 41 |
| A13 | A | 40 | F8 | | 42 | J8 | B | 41 |
| A23 | B | 40 | I7 | | 37 (*1) | R13 | | 41 |
| A40 | B | 40 | | | 39 (*2) | S1 | | 37 (*1) |
| C5 | | 40 | J2 | | 41 | | | 39 (*2) |
| C7 | A | 40 | J5 | A | 41 | | | |

**: Junction Block and Wire Harness Connector**

| Code | See Page | Junction Block and Wire Harness (Connector Location) |
|---|---|---|
| 1L | 25 | Engine Wire and Engine Room J/B (Engine Compartment Left) |
| 2K | 28 | Floor Wire and Driver Side J/B (Lower Finish Panel) |
| 2L | 29 | Instrument Panel Wire and Driver Side J/B (Lower Finish Panel) |
| 2M | | |
| 2O | | |
| 2R | | |
| 3A | 34 | Instrument Panel Wire and Passenger Side J/B (Instrument Panel Brace RH) |
| 3B | | |

**: Connector Joining Wire Harness and Wire Harness**

| Code | See Page | Joining Wire Harness and Wire Harness (Connector Location) |
|---|---|---|
| IC1 | 50 | Instrument Panel Wire and Floor Wire (Left Kick Panel) |
| IF3 | 50 | Engine Room Main Wire and Instrument Panel Wire (Right Side of Steering Column Tube) |
| IF4 | | |
| IJ1 | 52 | Instrument Panel Wire and Instrument Panel Wire (Instrument Panel Reinforcement RH) |
| IL1 | 52 | Engine Wire and Instrument Panel Wire (Behind the Glove Box) |

**: Ground Points**

| Code | See Page | Ground Points Location |
|---|---|---|
| II | 50 | Cowl Side Panel LH |

**: Splice Points**

| Code | See Page | Wire Harness with Splice Points | Code | See Page | Wire Harness with Splice Points |
|---|---|---|---|---|---|
| E5 | 46 (*1) | Engine Wire | E13 | 48 (*2) | Engine Wire |

* 1 : 1MZ-FE, 3MZ-FE * 2 : 2AZ-FE * 3 : w/ Power Seat * 4 : w/o Power Seat

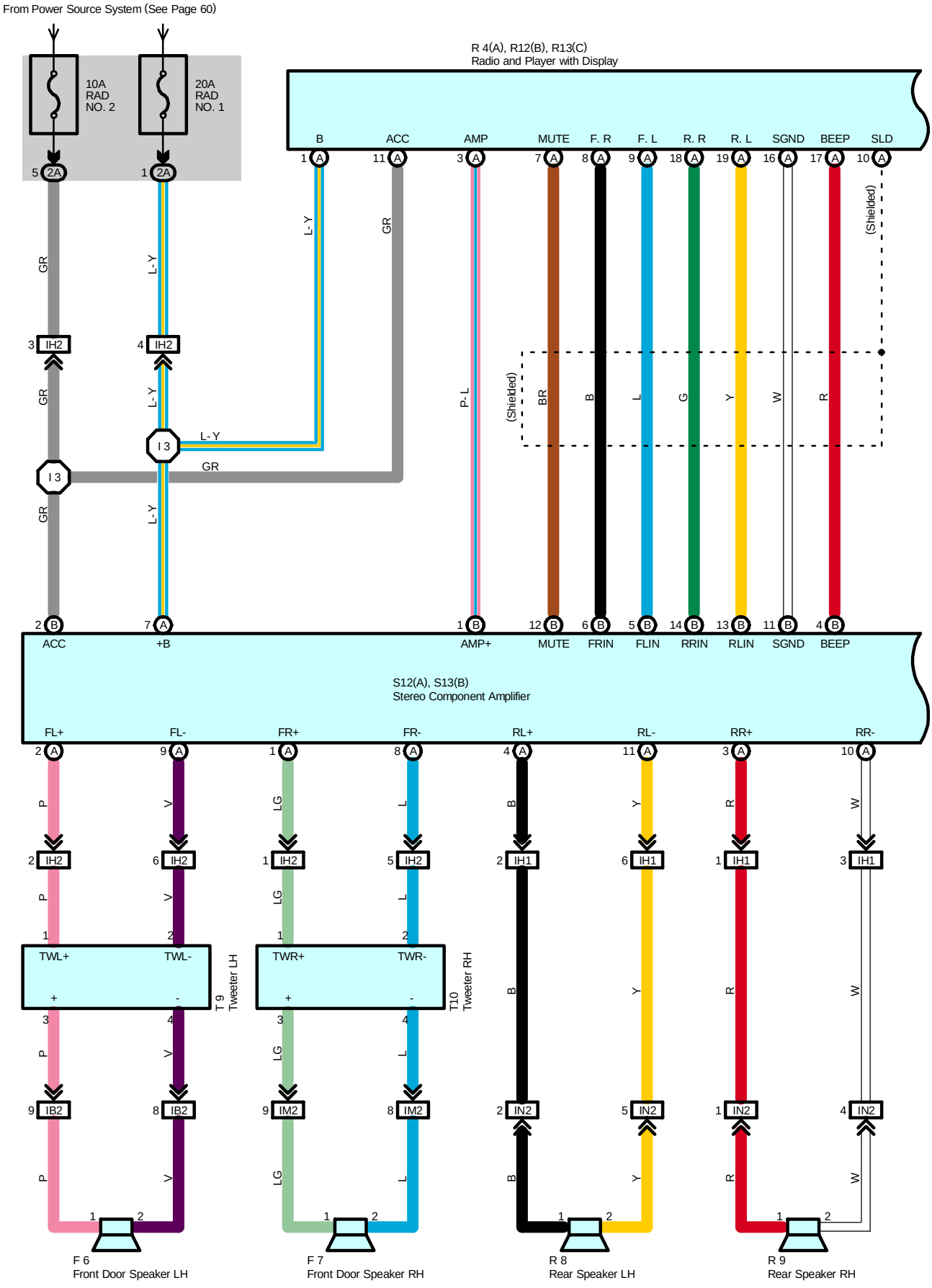
From Power Source System (See Page 60)
10A RAD NO. 2
20A RAD NO. 1
R 4(A), R12(B), R13(C)
Radio and Player with Display
B
ACC
AMP
MUTE
F. R
F. L
R. R
R. L
SGND
BEEP
SLD
(Shielded)
ACC
+B
AMP+
MUTE
FRIN
FLIN
RRIN
RLIN
SGND
BEEP
S12(A), S13(B)
Stereo Component Amplifier
FL+
FL-
FR+
FR-
RL+
RL-
RR+
RR-
TWL+
TWL-
T 9
Tweeter LH
TWR+
TWR-
T10
Tweeter RH
F 6
Front Door Speaker LH
F 7
Front Door Speaker RH
R 8
Rear Speaker LH
R 9
Rear Speaker RH

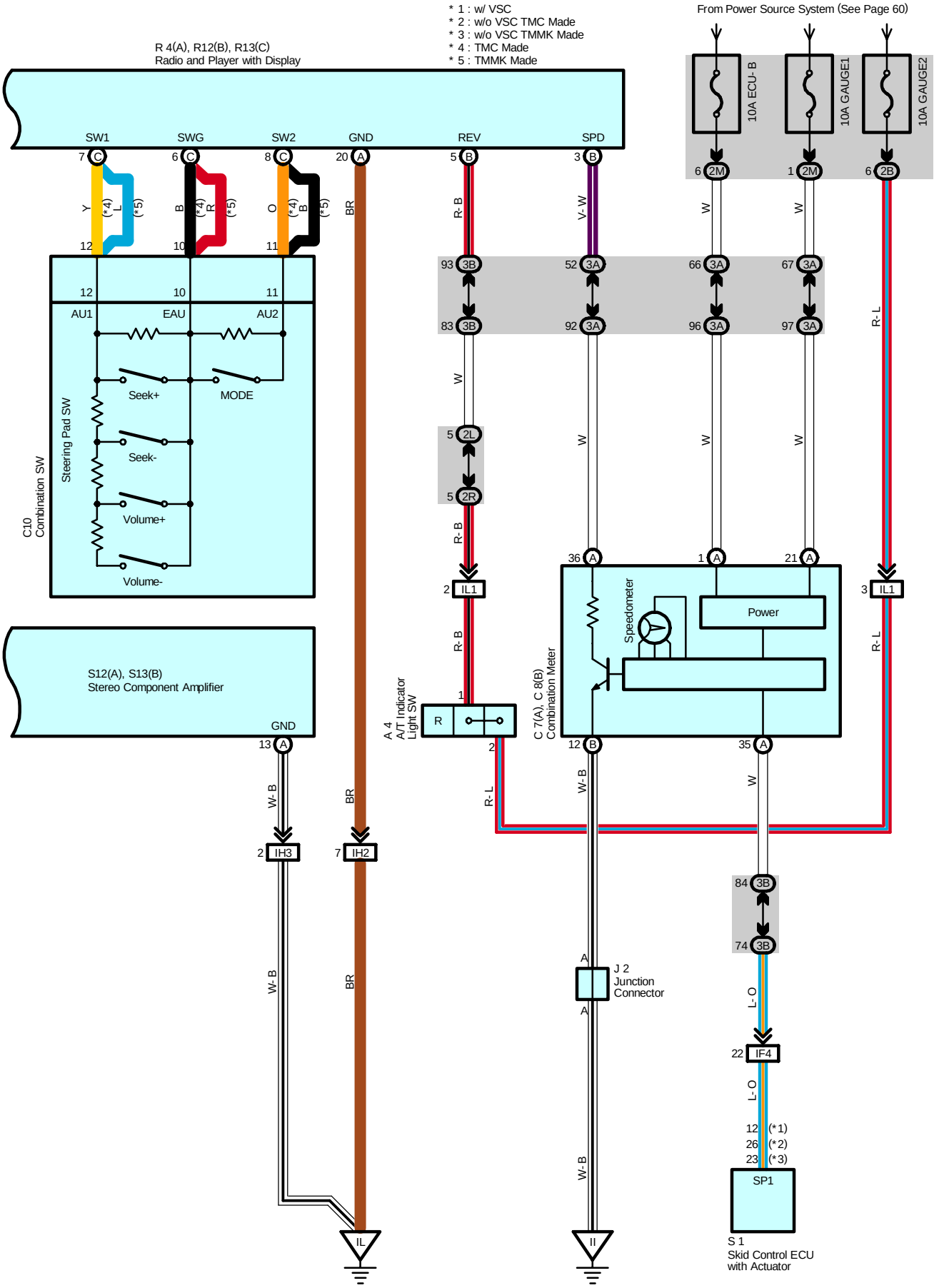
* 1 : w/ VSC
* 2 : w/o VSC TMC Made
* 3 : w/o VSC TMMK Made
* 4 : TMC Made
* 5 : TMMK Made
From Power Source System (See Page 60)
R 4(A), R12(B), R13(C)
Radio and Player with Display
SW1
SWG
SW2
GND
REV
SPD
10A ECU- B
10A GAUGE1
10A GAUGE2
AU1
EAU
AU2
Seek+
MODE
Seek-
Volume+
Volume-
Steering Pad SW
C10
Combination SW
S12(A), S13(B)
Stereo Component Amplifier
A 4
A/T Indicator
Light SW
C 7(A), C 8(B)
Combination Meter
Speedometer
Power
J 2
Junction
Connector
S 1
Skid Control ECU
with Actuator
IL1
IH3
IH2
IF4
SP1
IL
II

# Navigation and Audio System

## System Outline

The navigation system displays the operating status and instructions for the radio and player with display. Additionally, the navigation system precisely measures the current vehicle position, displays the map obtained from the map database on the screen, and informs the route to the destination shown on the map using voice guidance.

## Service Hints

**R4 (A) Radio and Player with Display**

(A)11-Ground : Approx. 12 volts with the ignition SW at ON or ACC position
(A) 1-Ground : Always approx. 12 volts
(A)20-Ground : Always continuity

**S12 (A), S13 (B) Stereo Component Amplifier**

(B) 2-Ground : Approx. 12 volts with the ignition SW at ON or ACC position
(A) 7-Ground : Always approx. 12 volts
(A)13-Ground : Always continuity

**○ : Parts Location**

| Code | | See Page | Code | | See Page | Code | | See Page |
|---|---|---|---|---|---|---|---|---|
| A4 | | 36 (*1) | J2 | | 41 | S1 | | 39 (*2) |
| | | 38 (*2) | R4 | A | 41 | S12 | A | 41 |
| C7 | A | 40 | R8 | | 43 | S13 | B | 41 |
| C8 | B | 40 | R9 | | 43 | T9 | | 41 |
| C10 | | 40 | R12 | B | 41 | T10 | | 41 |
| F6 | | 42 | R13 | C | 41 | | | |
| F7 | | 42 | S1 | | 37 (*1) | | | |

**⬭ : Junction Block and Wire Harness Connector**

| Code | See Page | Junction Block and Wire Harness (Connector Location) |
|---|---|---|
| 2A | 28 | Instrument Panel Wire and Driver Side J/B (Lower Finish Panel) |
| 2B | | |
| 2L | 29 | |
| 2M | | |
| 2R | | |
| 3A | 34 | Instrument Panel Wire and Passenger Side J/B (Instrument Panel Brace RH) |
| 3B | | |

**▭ : Connector Joining Wire Harness and Wire Harness**

| Code | See Page | Joining Wire Harness and Wire Harness (Connector Location) |
|---|---|---|
| IB2 | 50 | Front Door LH Wire and Instrument Panel Wire (Left Kick Panel) |
| IF4 | 50 | Engine Room Main Wire and Instrument Panel Wire (Right Side of Steering Column Tube) |
| IH1 | 50 | Instrument Panel Wire and Instrument Panel No.2 Wire (Instrument Panel Brace RH) |
| IH2 | | |
| IH3 | | |
| IL1 | 52 | Engine Wire and Instrument Panel Wire (Behind the Glove Box) |
| IM2 | 52 | Front Door RH Wire and Instrument Panel Wire (Right Kick Panel) |
| IN2 | 52 | Instrument Panel Wire and Floor No.2 Wire (Right Kick Panel) |

**▽ : Ground Points**

| Code | See Page | Ground Points Location |
|---|---|---|
| II | 50 | Cowl Side Panel LH |
| IL | 50 | Instrument Panel Brace RH |

* 1 : 1MZ-FE, 3MZ-FE * 2 : 2AZ-FE * 3 : w/ Power Seat * 4 : w/o Power Seat

: **Splice Points**

| Code | See Page | Wire Harness with Splice Points | Code | See Page | Wire Harness with Splice Points |
|---|---|---|---|---|---|
| I3 | 52 | Instrument Panel No.2 Wire | | | |

# Audio System for Separate Type Amplifier

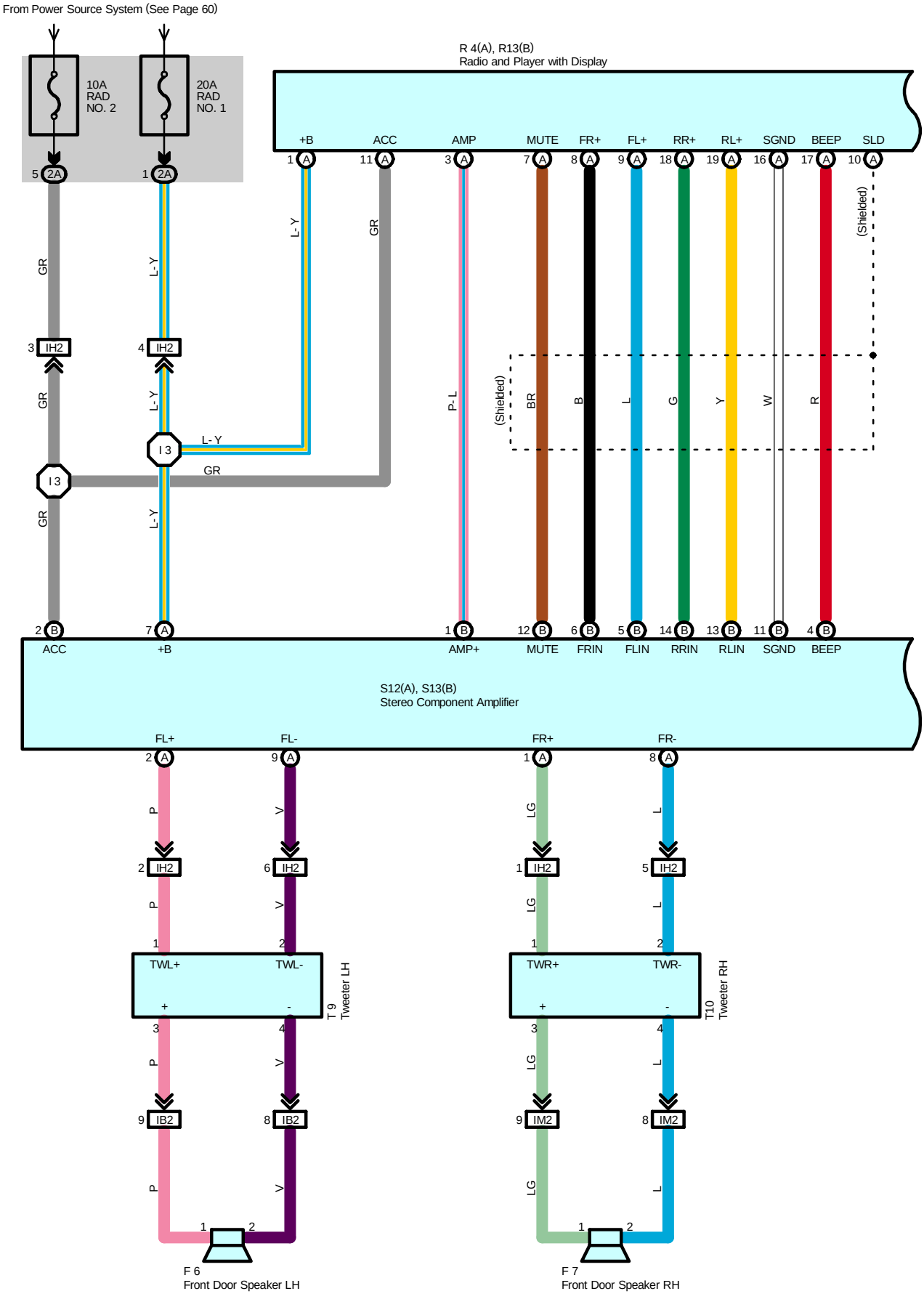

* 1 : TMC Made
* 2 : TMMK Made

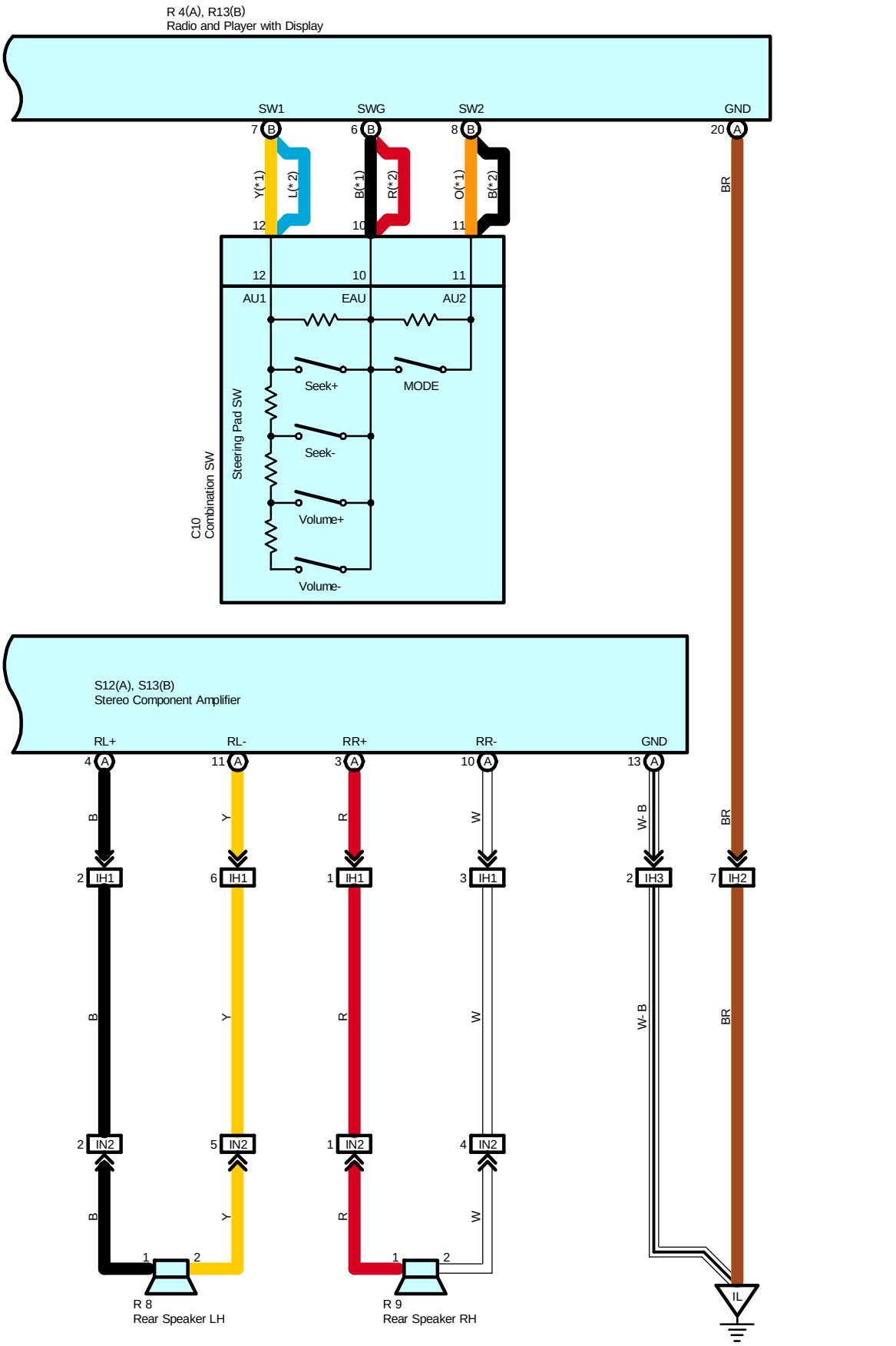

# Audio System for Separate Type Amplifier

**Service Hints**

**R4 (A) Radio and Player**

(A)11-Ground : Approx. 12 volts with the ignition SW at ACC or ON position
(A) 1-Ground : Always approx. 12 volts
(A)20-Ground : Always continuity

**S12 (A), S13 (B) Stereo Component Amplifier**

(B) 2-Ground : Approx. 12 volts with the ignition SW at ACC or ON position
(A) 7-Ground : Always approx. 12 volts
(A)13-Ground : Always continuity

**: Parts Location**

| Code | See Page | Code | See Page | Code | See Page |
|---|---|---|---|---|---|
| C10 | 40 | R8 | 43 | S13 B | 41 |
| F6 | 42 | R9 | 43 | T9 | 41 |
| F7 | 42 | R13 B | 41 | T10 | 41 |
| R4 A | 41 | S12 A | 41 | | |

**: Junction Block and Wire Harness Connector**

| Code | See Page | Junction Block and Wire Harness (Connector Location) |
|---|---|---|
| 2A | 28 | Instrument Panel Wire and Driver Side J/B (Lower Finish Panel) |

**: Connector Joining Wire Harness and Wire Harness**

| Code | See Page | Joining Wire Harness and Wire Harness (Connector Location) |
|---|---|---|
| IB2 | 50 | Front Door LH Wire and Instrument Panel Wire (Left Kick Panel) |
| IH1 | 50 | Instrument Panel Wire and Instrument Panel No.2 Wire (Instrument Panel Brace RH) |
| IH2 | | |
| IH3 | | |
| IM2 | 52 | Front Door RH Wire and Instrument Panel Wire (Right Kick Panel) |
| IN2 | 52 | Instrument Panel Wire and Floor No.2 Wire (Right Kick Panel) |

**: Ground Points**

| Code | See Page | Ground Points Location |
|---|---|---|
| IL | 50 | Instrument Panel Brace RH |

**: Splice Points**

| Code | See Page | Wire Harness with Splice Points | Code | See Page | Wire Harness with Splice Points |
|---|---|---|---|---|---|
| I3 | 52 | Instrument Panel No.2 Wire | | | |

# Audio System for Built-In Type Amplifier

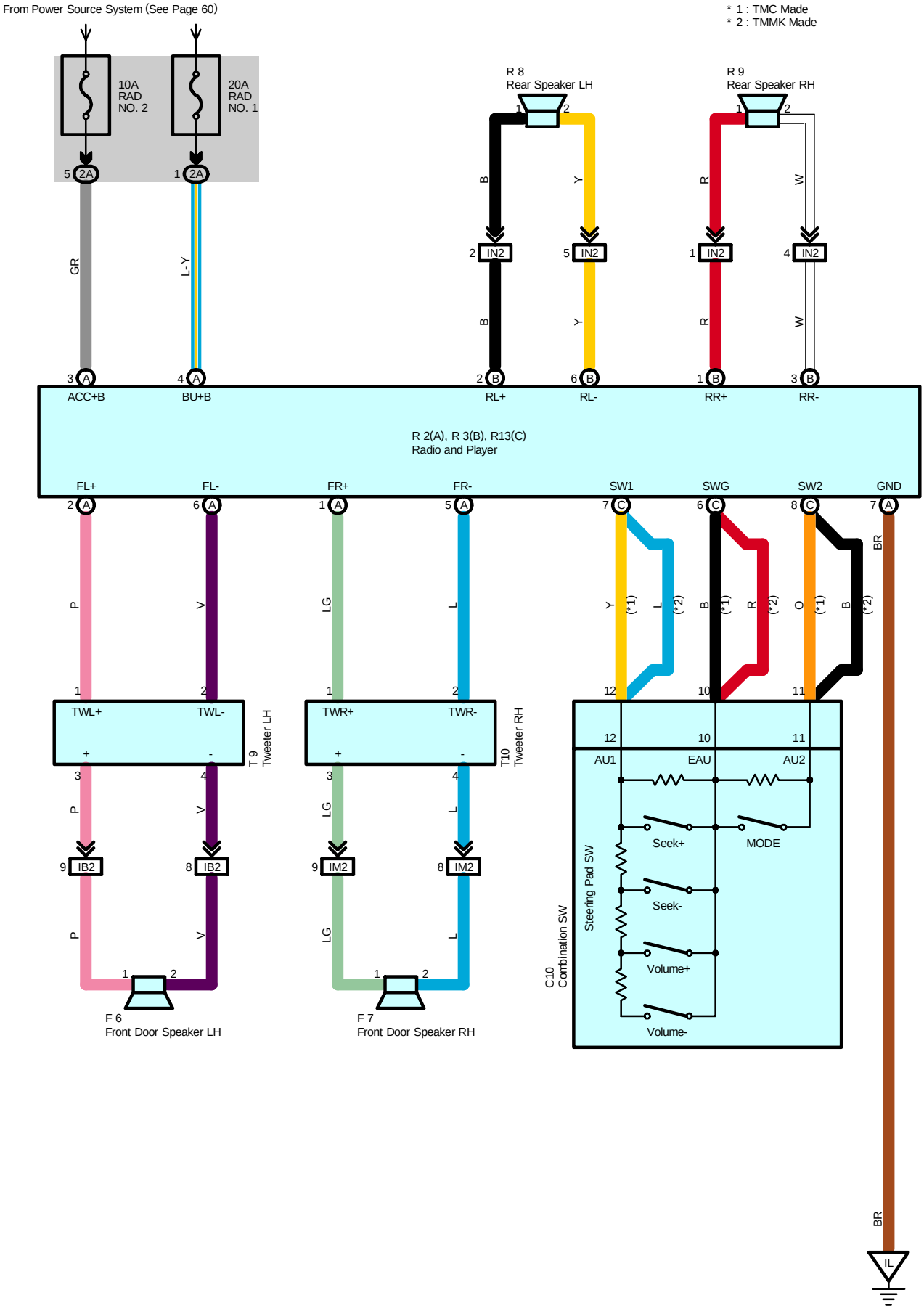

**Service Hints**

**R2 (A) Radio and Player**

(A) 3-Ground : Approx. 12 volts with the ignition SW at ACC or ON position
(A) 4-Ground : Always approx. 12 volts
(A) 7-Ground : Always continuity

**: Parts Location**

| Code | See Page | Code | See Page | Code | See Page |
|---|---|---|---|---|---|
| C10 | 40 | R3 B | 41 | T9 | 41 |
| F6 | 42 | R8 | 43 | T10 | 41 |
| F7 | 42 | R9 | 43 | | |
| R2 A | 41 | R13 C | 41 | | |

**: Junction Block and Wire Harness Connector**

| Code | See Page | Junction Block and Wire Harness (Connector Location) |
|---|---|---|
| 2A | 28 | Instrument Panel Wire and Driver Side J/B (Lower Finish Panel) |

**: Connector Joining Wire Harness and Wire Harness**

| Code | See Page | Joining Wire Harness and Wire Harness (Connector Location) |
|---|---|---|
| IB2 | 50 | Front Door LH Wire and Instrument Panel Wire (Left Kick Panel) |
| IM2 | 52 | Front Door RH Wire and Instrument Panel Wire (Right Kick Panel) |
| IN2 | 52 | Instrument Panel Wire and Floor No.2 Wire (Right Kick Panel) |

**: Ground Points**

| Code | See Page | Ground Points Location |
|---|---|---|
| IL | 50 | Instrument Panel Brace RH |

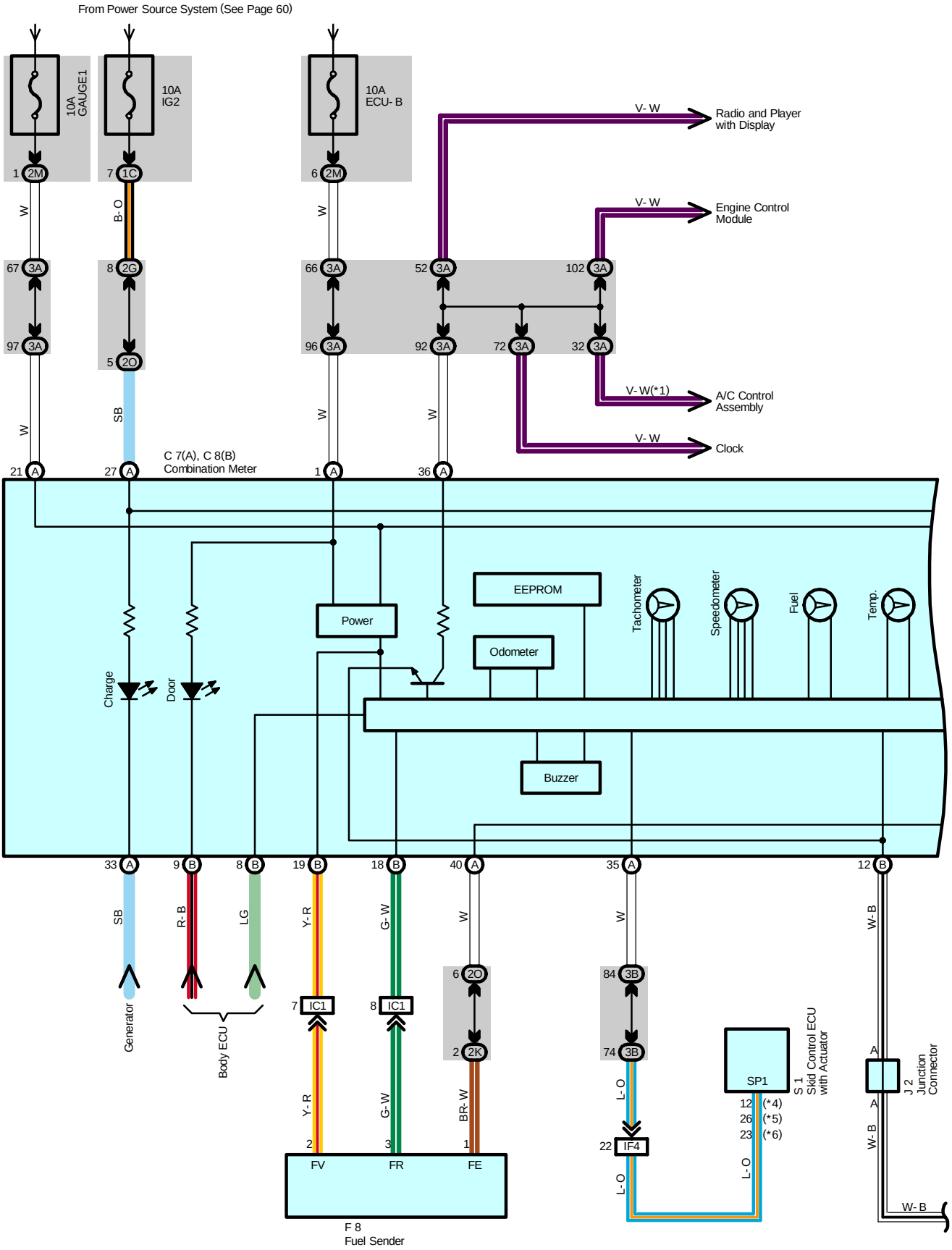
From Power Source System (See Page 60)
10A GAUGE1
10A IG2
10A ECU- B
1 2M
7 1C
6 2M
W
B- O
W
67 3A
8 2G
66 3A
52 3A
102 3A
97 3A
5 2O
96 3A
92 3A
72 3A
32 3A
W
SB
W
W
V- W
Radio and Player with Display
V- W
Engine Control Module
V- W(*1)
A/C Control Assembly
V- W
Clock
21 A
27 A
C 7(A), C 8(B)
Combination Meter
1 A
36 A
EEPROM
Power
Odometer
Tachometer
Speedometer
Fuel
Temp.
Charge
Door
Buzzer
33 A
9 B
8 B
19 B
18 B
40 A
35 A
12 B
SB
R- B
LG
Y- R
G- W
W
W
W- B
Generator
Body ECU
6 2O
84 3B
7 IC1
8 IC1
2 2K
74 3B
A
SP1
S 1
Skid Control ECU with Actuator
J 2
Junction Connector
Y- R
G- W
BR- W
L- O
12 (*4)
26 (*5)
23 (*6)
A
22 IF4
2
3
1
FV
FR
FE
L- O
L- O
W- B
W- B
F 8
Fuel Sender

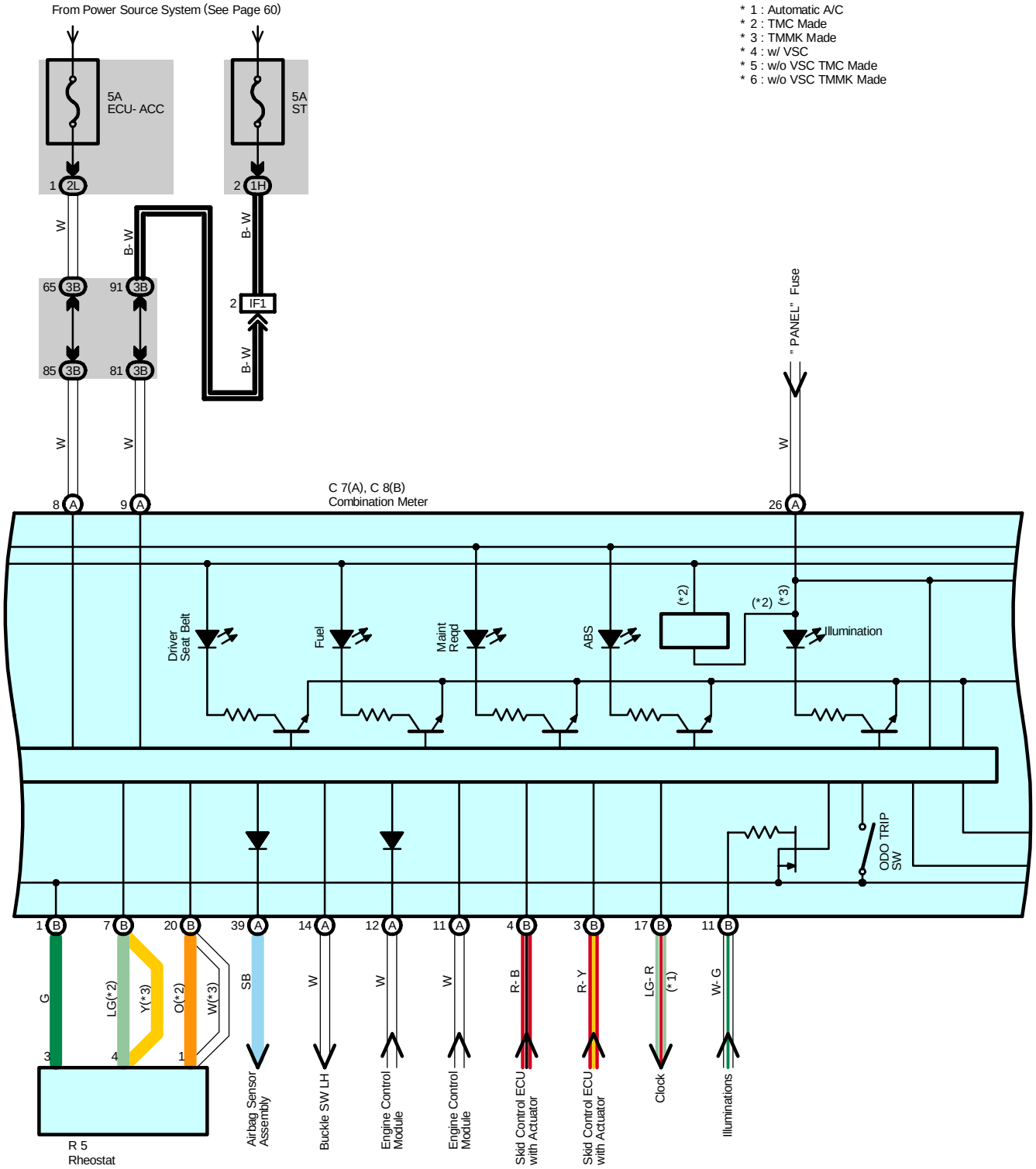
From Power Source System (See Page 60)
* 1 : Automatic A/C
* 2 : TMC Made
* 3 : TMMK Made
* 4 : w/ VSC
* 5 : w/o VSC TMC Made
* 6 : w/o VSC TMMK Made
5A
ECU- ACC
5A
ST
1 2L
2 1H
W
B- W
65 3B
91 3B
85 3B
81 3B
2 IF1
B- W
W
W
8 A
9 A
C 7(A), C 8(B)
Combination Meter
" PANEL" Fuse
W
26 A
Driver
Seat Belt
Fuel
Maint
Reqd
ABS
(*2)
(*2)
(*3)
Illumination
ODO TRIP
SW
1 B
7 B
20 B
39 A
14 A
12 A
11 A
4 B
3 B
17 B
11 B
G
LG(*2)
Y(*3)
O(*2)
W(*3)
SB
W
W
W
R- B
R- Y
LG- R
(*1)
W- G
3
4
1
R 5
Rheostat
Airbag Sensor
Assembly
Buckle SW LH
Engine Control
Module
Engine Control
Module
Skid Control ECU
with Actuator
Skid Control ECU
with Actuator
Clock
Illuminations

W- B W- B

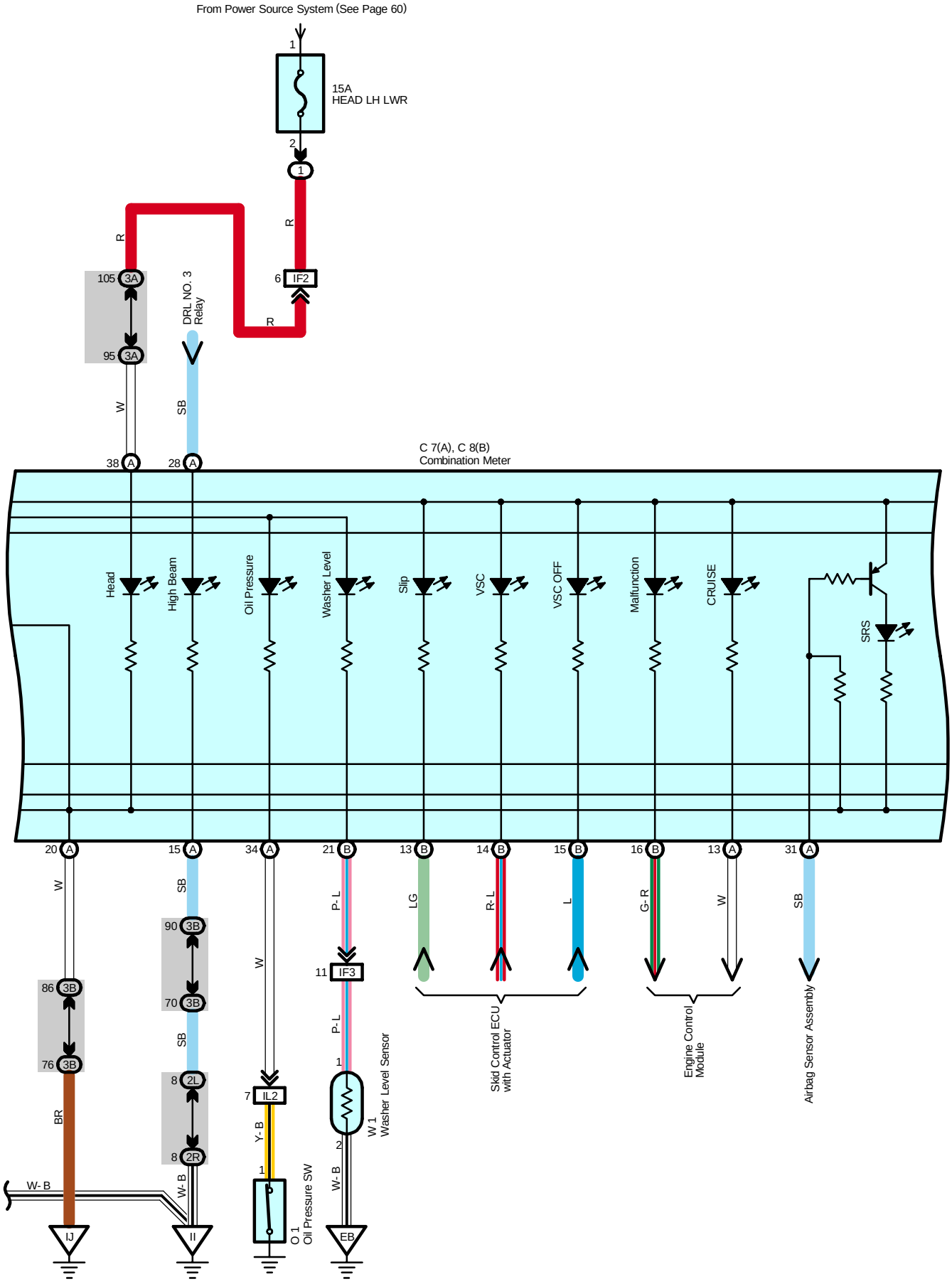
From Power Source System (See Page 60)
1
15A
HEAD LH LWR
2
1
R
R
105 3A
95 3A
6 IF2
DRL NO. 3
Relay
R
W
SB
38 A
28 A
C 7(A), C 8(B)
Combination Meter
Head
High Beam
Oil Pressure
Washer Level
Slip
VSC
VSC OFF
Malfunction
CRUISE
SRS
20 A
15 A
34 A
21 B
13 B
14 B
15 B
16 B
13 A
31 A
W
SB
W
P- L
LG
R- L
L
G- R
W
SB
90 3B
70 3B
86 3B
76 3B
8 2L
8 2R
11 IF3
7 IL2
1
2
SB
BR
W- B
W- B
Y- B
P- L
W 1
Washer Level Sensor
O 1
Oil Pressure SW
IJ
II
EB
Skid Control ECU
with Actuator
Engine Control
Module
Airbag Sensor Assembly

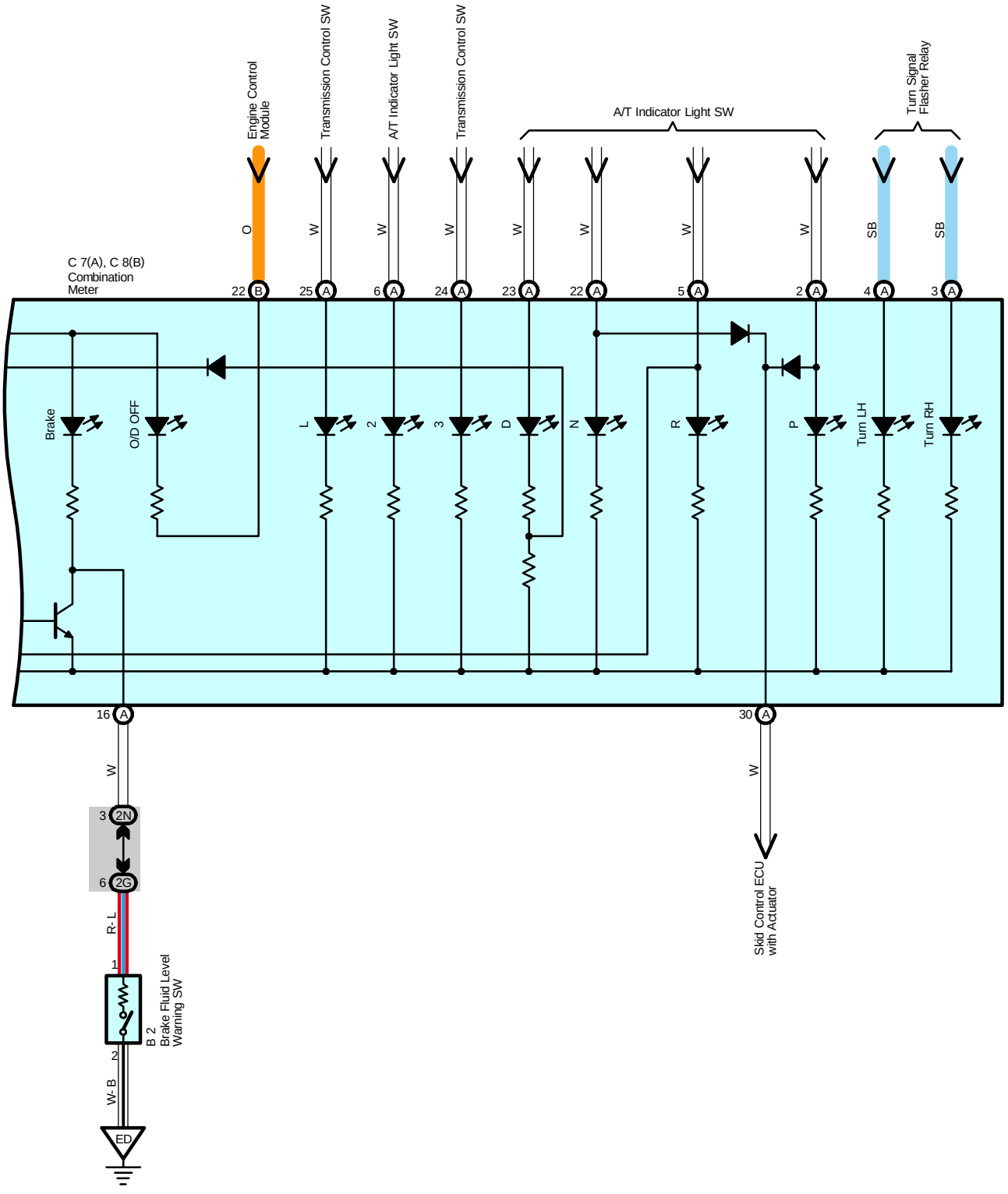
Engine Control Module
Transmission Control SW
A/T Indicator Light SW
Transmission Control SW
A/T Indicator Light SW
Turn Signal Flasher Relay
C 7(A), C 8(B)
Combination Meter
22 B
25 A
6 A
24 A
23 A
22 A
5 A
2 A
4 A
3 A
O
W
W
W
W
W
W
W
SB
SB
Brake
O/D OFF
L
2
3
D
N
R
P
Turn LH
Turn RH
16 A
30 A
W
W
3 2N
6 2G
R- L
1
2
W- B
ED
B 2
Brake Fluid Level Warning SW
Skid Control ECU with Actuator

# Combination Meter

**Service Hints**

**B2 Brake Fluid Level Warning SW**

1-2 : Closed with the float down

**C7 (A) Combination Meter**

(A) 21, (A) 27-Ground : Approx. 12 volts with the ignition SW at ON or ST position

(A) 1-Ground : Always approx. 12 volts

(A)15, (A) 20, (B) 12-Ground : Always continuity

**O1 Oil Pressure SW**

1-Ground : Continuity with the oil pressure above approx. 20 kpa (2.8 psi, 0.2 kgf/cm$^2$)

**○ : Parts Location**

| Code | | See Page | Code | See Page | Code | See Page |
|---|---|---|---|---|---|---|
| B2 | | 36 (*1) | J2 | 41 | S1 | 39 (*2) |
| | | 38 (*2) | O1 | 37 (*1) | W1 | 37 (*1) |
| C7 | A | 40 | | 39 (*2) | | 39 (*2) |
| C8 | B | 40 | R5 | 41 | | |
| F8 | | 42 | S1 | 37 (*1) | | |

**⬭ : Relay Blocks**

| Code | See Page | Relay Blocks (Relay Block Location) |
|---|---|---|
| 1 | 22 | Engine Room R/B (Engine Compartment Left) |

**⬭ : Junction Block and Wire Harness Connector**

| Code | See Page | Junction Block and Wire Harness (Connector Location) |
|---|---|---|
| 1C | 25 | Engine Room Main Wire and Engine Room J/B (Engine Compartment Left) |
| 1H | | |
| 2G | 28 | Engine Room Main Wire and Driver Side J/B (Lower Finish Panel) |
| 2K | 28 | Floor Wire and Driver Side J/B (Lower Finish Panel) |
| 2L | 29 | Instrument Panel Wire and Driver Side J/B (Lower Finish Panel) |
| 2M | | |
| 2N | | |
| 2O | | |
| 2R | | |
| 3A | 34 | Instrument Panel Wire and Passenger Side J/B (Instrument Panel Brace RH) |
| 3B | | |

**▭ : Connector Joining Wire Harness and Wire Harness**

| Code | See Page | Joining Wire Harness and Wire Harness (Connector Location) |
|---|---|---|
| IC1 | 50 | Instrument Panel Wire and Floor Wire (Left Kick Panel) |
| IF1 | 50 | Engine Room Main Wire and Instrument Panel Wire (Right Side of Steering Column Tube) |
| IF2 | | |
| IF3 | | |
| IF4 | | |
| IL2 | 52 | Engine Wire and Instrument Panel Wire (Behind the Glove Box) |

**▽ : Ground Points**

| Code | See Page | Ground Points Location |
|---|---|---|
| EB | 46 (*1) | Right Fender |
| | 48 (*2) | |
| ED | 46 (*1) | Left Fender |
| | 48 (*2) | |
| II | 50 | Cowl Side Panel LH |
| IJ | 50 | Instrument Panel Brace LH |

* 1 : 1MZ-FE, 3MZ-FE * 2 : 2AZ-FE * 3 : w/ Power Seat * 4 : w/o Power Seat

# Radiator Fan and Condenser Fan

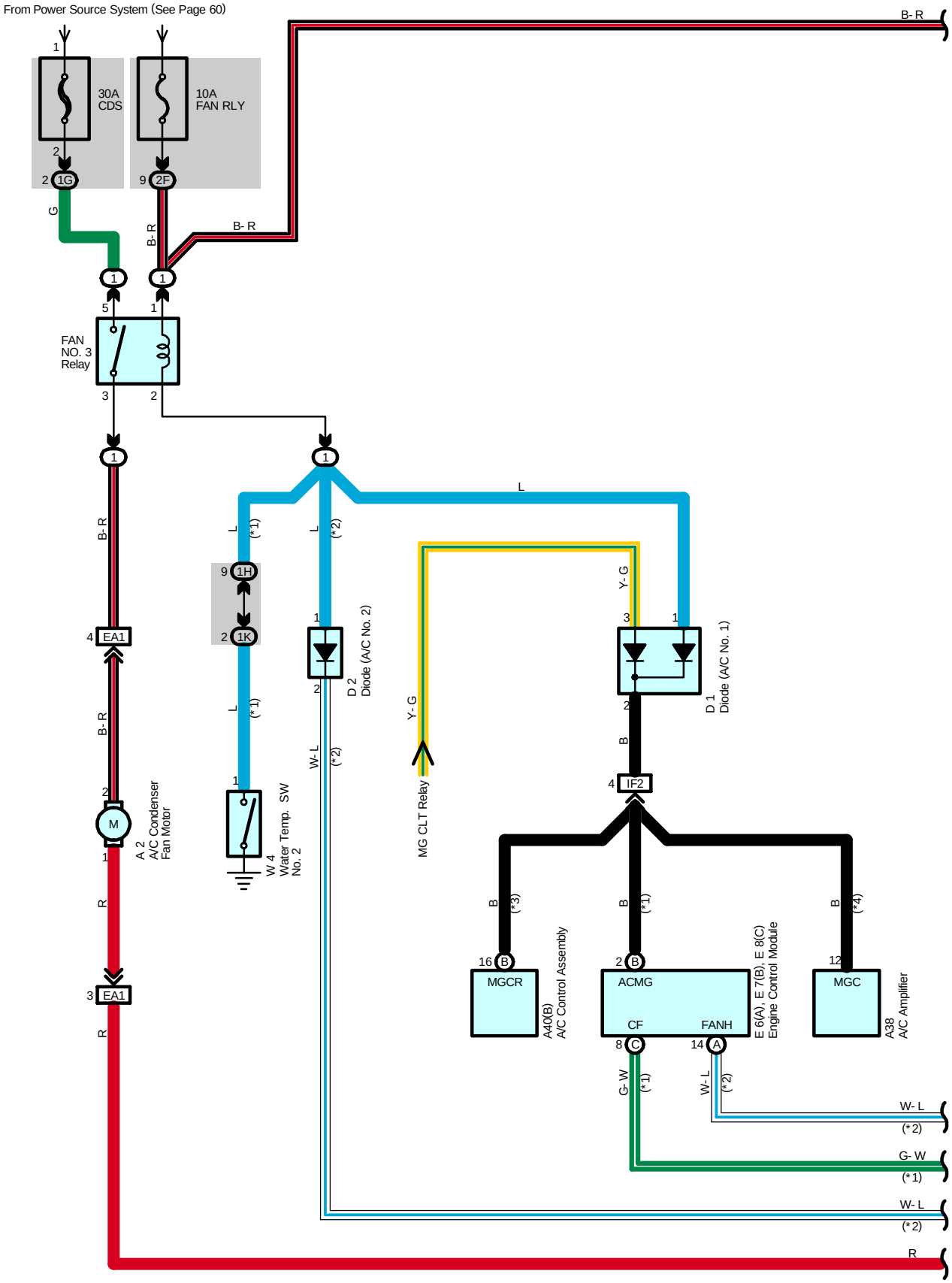

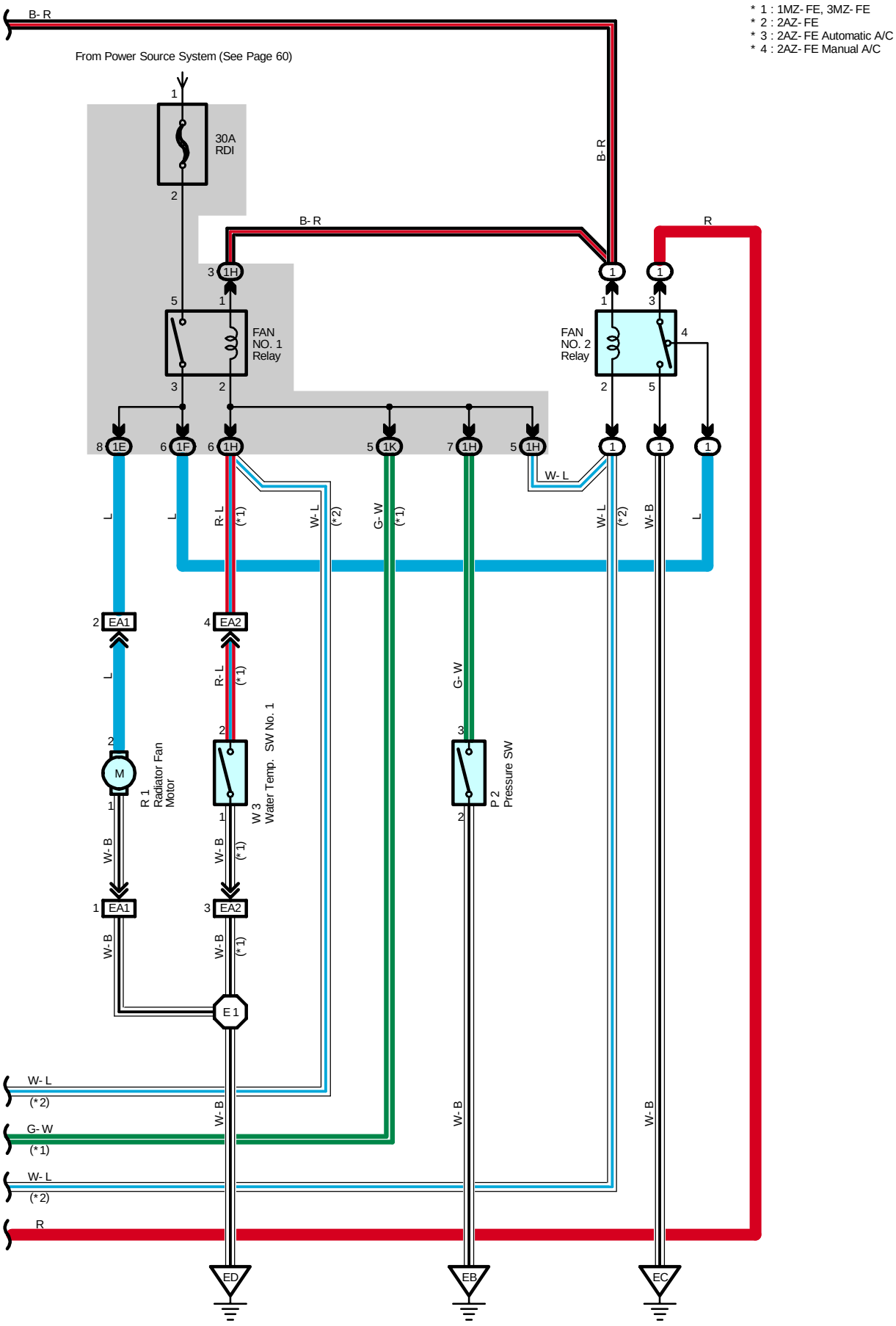
* 1 : 1MZ- FE, 3MZ- FE
* 2 : 2AZ- FE
* 3 : 2AZ- FE Automatic A/C
* 4 : 2AZ- FE Manual A/C
B- R
From Power Source System (See Page 60)
30A
RDI
FAN
NO. 1
Relay
FAN
NO. 2
Relay
W- L
R- L
(*1)
W- L
(*2)
G- W
(*1)
W- L
(*2)
L
L
L
W- B
R
EA1
EA2
M
R 1
Radiator Fan
Motor
W 3
Water Temp. SW No. 1
P 2
Pressure SW
E 1
ED
EB
EC

**System Outline**

**Fan Motor Operation (3MZ-FE, 1MZ-FE)**

With the ignition SW turned on, the current through the FAN RLY fuse flows to the FAN NO.1 relay (Coil side), FAN NO.2 relay (Coil side) and FAN NO.3 relay (Coil side).

**1. Low Speed Operation**

Only when the A/C system is activated or the water temp. SW No.2 is turned on, the A/C condenser fan motor and the radiator fan motor rotates at low speed.

When the A/C system is activated, the current from FAN RLY fuse flows to the FAN NO.3 relay (Coil side) to TERMINAL 1 of the diode to TERMINAL 2 to TERMINAL (B) 2 of the engine control module causing the FAN NO.3 relay to turn on. As a result, the current through the CDS fuse flows to TERMINAL 5 of the FAN NO.3 relay to TERMINAL 3 to TERMINAL 2 of the A/C condenser fan motor to TERMINAL 1 to TERMINAL 3 of the FAN NO.2 relay to TERMINAL 4 to TERMINAL 2 of the radiator fan motor to TERMINAL 1 to GROUND. As this flowing in series for the motors, the motors rotate at low speed.

When the water temp. SW No.2 is turned on, the current from FAN RLY fuse flows to the FAN NO.3 relay (Coil side) to TERMINAL 1 of the water temp. SW No.2 to GROUND, causing the FAN NO.3 relay to turn on. As a result, the current through the CDS fuse flows the same route as above, rotating the motors at low speed.

**2. High Speed Operation**

With the pressure SW is turned on and/or the water temp. SW No.1 is turned on, the A/C condenser fan motor and the radiator fan motor rotate at high speed.

When the pressure SW is turned on, the current through the FAN RLY fuse flows to the FAN NO.1 and FAN NO.2 relay (Coil side) to TERMINAL 3 of the pressure SW to TERMINAL 2 to GROUND, and the current through the FAN RLY fuse flows to the FAN NO.3 relay (Coil side) to TERMINAL 1 of the water temp. SW No.2 to GROUND. As a result, FAN NO.1, NO.2. and NO.3 relay is turned on. At the same time, the current from the RDI fuse flows to FAN NO.1 relay (Point side) to TERMINAL 2 of the radiator fan motor to TERMINAL 1 to GROUND, and the current from the CDS fuse flows to FAN NO.3 relay (Point side) to TERMINAL 2 of the A/C condenser fan motor to TERMINAL 1 to TERMINAL 3 of the FAN NO.2 relay to TERMINAL 5 to GROUND.

As the current flowing in parallel for motors as above, the motors rotate at high speed.

When the water temp. SW No.1 is turned on, the current through the FAN RLY fuse flows to the FAN NO.1 and NO.2 relay (Coil side) to TERMINAL 2 of the water temp. SW No.1 to TERMINAL 1 to GROUND, and the current through the FAN RLY fuse flows to the FAN NO.3 relay (Coil side) to TERMINAL 1 of the water temp. SW No.2 to GROUND. As a result, FAN NO.1, NO.2 and NO.3 relay is turned on. At the same time, the current from the RDI fuse flows to FAN NO.1 relay (Point side) to TERMINAL 2 of the radiator fan motor to TERMINAL 1 to GROUND, and the current from the CDS fuse flows to FAN NO.3 relay (Point side) to TERMINAL 2 of the A/C condenser fan motor to TERMINAL 1 to TERMINAL 3 of the FAN NO.2 relay to TERMINAL 5 to GROUND.

As the current flowing in parallel for motors as above, the motors rotate at high speed.

**Fan Motor Operation (2AZ-FE)**

With the ignition SW turned on, the current through the FAN RLY fuse flows to the FAN NO.1 relay (Coil side), FAN NO.2 relay (Coil side) and FAN NO.3 relay (Coil side).

**1. Low Speed Operation**

When the ignition SW is turned on and the A/C system is activated, the A/C condenser fan motor and the radiator fan motor rotates at low speed.

When the A/C system is activated, the current from FAN RLY fuse flows to the FAN NO.3 relay (Coil side) to TERMINAL 1 of the diode to TERMINAL 2 to TERMINAL (B) 16 of the A/C control assembly (Automatic A/C) or 12 of the A/C amplifier (Manual A/C) causing the FAN NO.3 relay to turn on. As a result, the current through the CDS fuse flows to TERMINAL 5 of the FAN NO.3 relay to TERMINAL 3 to TERMINAL 2 of the A/C condenser fan motor to TERMINAL 1 to TERMINAL 3 of the FAN NO.2 relay to TERMINAL 4 to TERMINAL 2 of the radiator fan motor to TERMINAL 1 to GROUND. As this flowing in series for the motors, the motors rotate at low speed.

**2. High Speed Operation**

When the pressure SW is turned on, the current through the FAN RLY fuse flows to the FAN NO.1 and NO.2 relay (Coil side) to TERMINAL 3 of the pressure SW to TERMINAL 2 to GROUND, and the current through the FAN RLY fuse flows to the FAN NO.3 relay (Coil side) to TERMINAL 1 of the diode to TERMINAL 2 to TERMINAL 3 of the pressure SW to TERMINAL 2 to GROUND. As a result, FAN NO.1, NO.2. and NO.3 relay is turned on. At the same time, the current from the RDI fuse flows to FAN NO.1 relay (Point side) to TERMINAL 2 of the radiator fan motor to TERMINAL 1 to GROUND, and the current from the CDS fuse flows to FAN NO.3 relay (Point side) to TERMINAL 2 of the A/C condenser fan motor to TERMINAL 1 to TERMINAL 3 of the FAN NO.2 relay to TERMINAL 5 to GROUND.
As the current flowing in parallel for motors as above, the motors rotate at high speed.
When the engine coolant is too high, the current through the FAN RLY fuse flows to the FAN NO.1 and NO.2 relay (Coil side) to TERMINAL (A) 14 of the engine control module to GROUND, and the current through the FAN RLY fuse flows to the FAN NO.3 relay (Coil side) to TERMINAL 1 of the diode to TERMINAL 2 to TERMINAL (A) 14 of the engine control module to GROUND. As a result, FAN NO.1, NO.2 and NO.3 relay is turned on. At the same time, the current from the RDI fuse flows to FAN NO.1 relay (Point side) to TERMINAL 2 of the radiator fan motor to TERMINAL 1 to GROUND, and the current from the CDS fuse flows to FAN NO.3 relay (Point side) to TERMINAL 2 of the A/C condenser fan motor to TERMINAL 1 to TERMINAL 3 of the FAN NO.2 relay to TERMINAL 5 to GROUND.
As the current flowing in parallel for motors as above, the motors rotate at high speed.

**Service Hints**

**P2 Pressure SW**

3-2 : Close above approx. 15.5 kgf/cm$^2$ (224 psi, 1520 kpa)
Open below approx. 12.5 kgf/cm$^2$ (181 psi, 1225 kpa)

**W3 Water Temp. SW No.1**

2-1 : Closed above approx. 95˚C (203˚ F)

**W4 Water Temp. SW No.2**

1-Ground : Closed above approx. 90˚C (194˚F)

**○ : Parts Location**

| Code | See Page | Code | See Page | Code | See Page |
|---|---|---|---|---|---|
| A2 | 36 (*1) | D2 | 38 (*2) | R1 | 37 (*1) |
| | 38 (*2) | E6 A | 40 | | 39 (*2) |
| A38 | 40 | E7 B | 40 | W3 | 37 (*1) |
| A40 B | 40 | E8 C | 40 | W4 | 37 (*1) |
| D1 | 36 (*1) | P2 | 37 (*1) | | |
| | 38 (*2) | | 39 (*2) | | |

**▭ : Relay Blocks**

| Code | See Page | Relay Blocks (Relay Block Location) |
|---|---|---|
| 1 | 22 | Engine Room R/B (Engine Compartment Left) |

**▭ : Junction Block and Wire Harness Connector**

| Code | See Page | Junction Block and Wire Harness (Connector Location) |
|---|---|---|
| 1E | 25 | Engine Room Main Wire and Engine Room J/B (Engine Compartment Left) |
| 1F | | |
| 1G | | |
| 1H | | |
| 1K | 25 | Engine Wire and Engine Room J/B (Engine Compartment Left) |
| 2F | 28 | Engine Room Main Wire and Driver Side J/B (Lower Finish Panel) |

* 1 : 1MZ-FE, 3MZ-FE * 2 : 2AZ-FE * 3 : w/ Power Seat * 4 : w/o Power Seat

# Radiator Fan and Condenser Fan

**: Connector Joining Wire Harness and Wire Harness**

| Code | See Page | Joining Wire Harness and Wire Harness (Connector Location) |
|---|---|---|
| EA1 | 46 (*1) | Engine Room Main Wire and Engine Room No.2 Wire (Radiator Side Support LH) |
| | 48 (*2) | |
| EA2 | 46 (*1) | |
| | 48 (*2) | |
| IF2 | 50 | Engine Room Main Wire and Instrument Panel Wire (Right Side of Steering Column Tube) |

**: Ground Points**

| Code | See Page | Ground Points Location |
|---|---|---|
| EB | 46 (*1) | Right Fender |
| | 48 (*2) | |
| EC | 46 (*1) | Left Fender |
| | 48 (*2) | |
| ED | 46 (*1) | |
| | 48 (*2) | |

**: Splice Points**

| Code | See Page | Wire Harness with Splice Points | Code | See Page | Wire Harness with Splice Points |
|---|---|---|---|---|---|
| E1 | 46 (*1) | Engine Room Main Wire | E1 | 48 (*2) | Engine Room Main Wire |

* 1 : 1MZ-FE, 3MZ-FE * 2 : 2AZ-FE * 3 : w/ Power Seat * 4 : w/o Power Seat

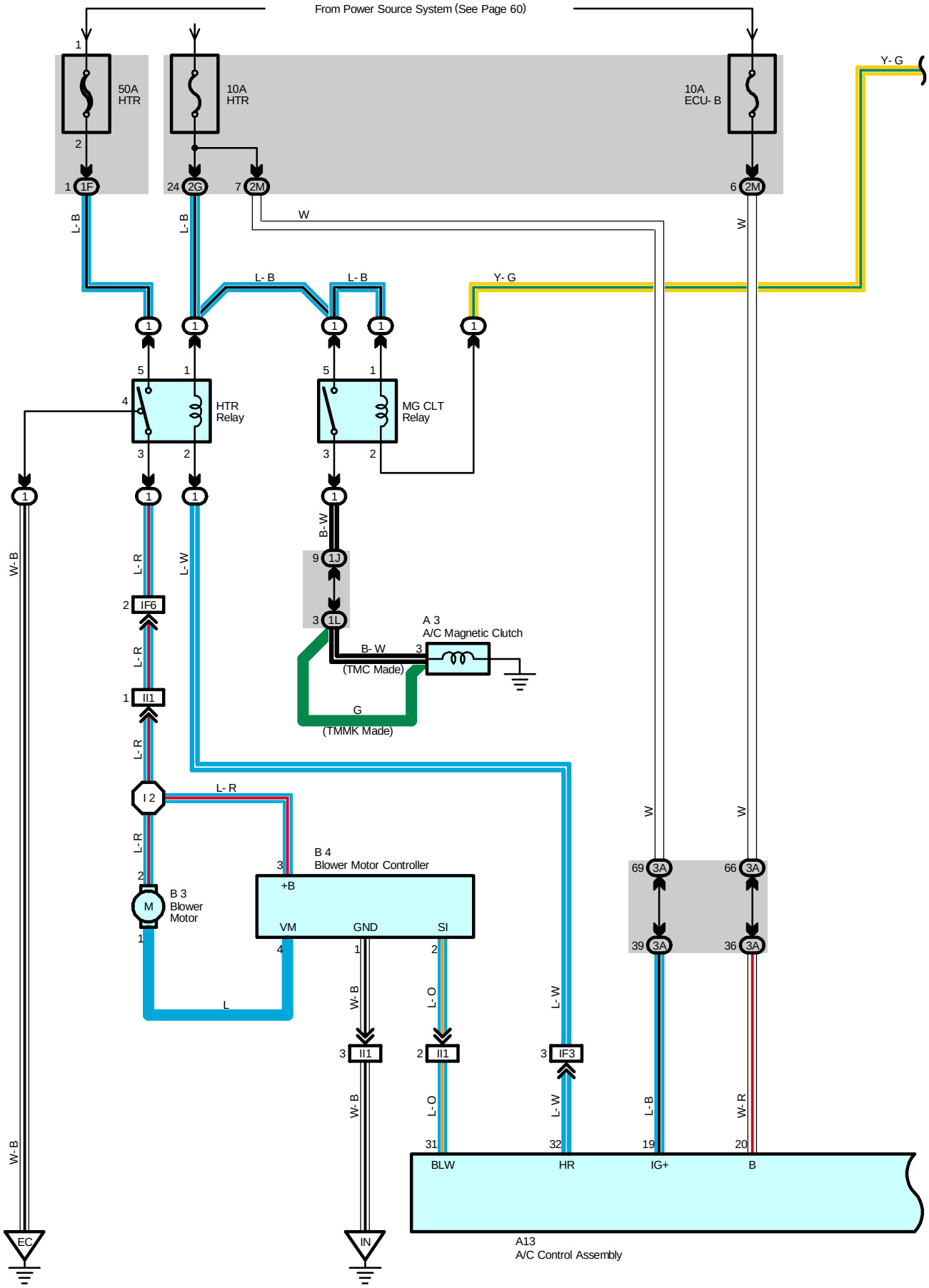
From Power Source System (See Page 60)
50A HTR
10A HTR
10A ECU- B
Y- G
1F
2G
2M
6 2M
W
L- B
Y- G
HTR Relay
MG CLT Relay
B- W
1J
1L
A 3
A/C Magnetic Clutch
(TMC Made)
G
(TMMK Made)
W- B
L- R
L- W
IF6
II1
I 2
B 4
Blower Motor Controller
+B
VM
GND
SI
B 3
Blower Motor
L
L- O
IF3
3A
BLW
HR
IG+
B
W- R
A13
A/C Control Assembly
EC
IN

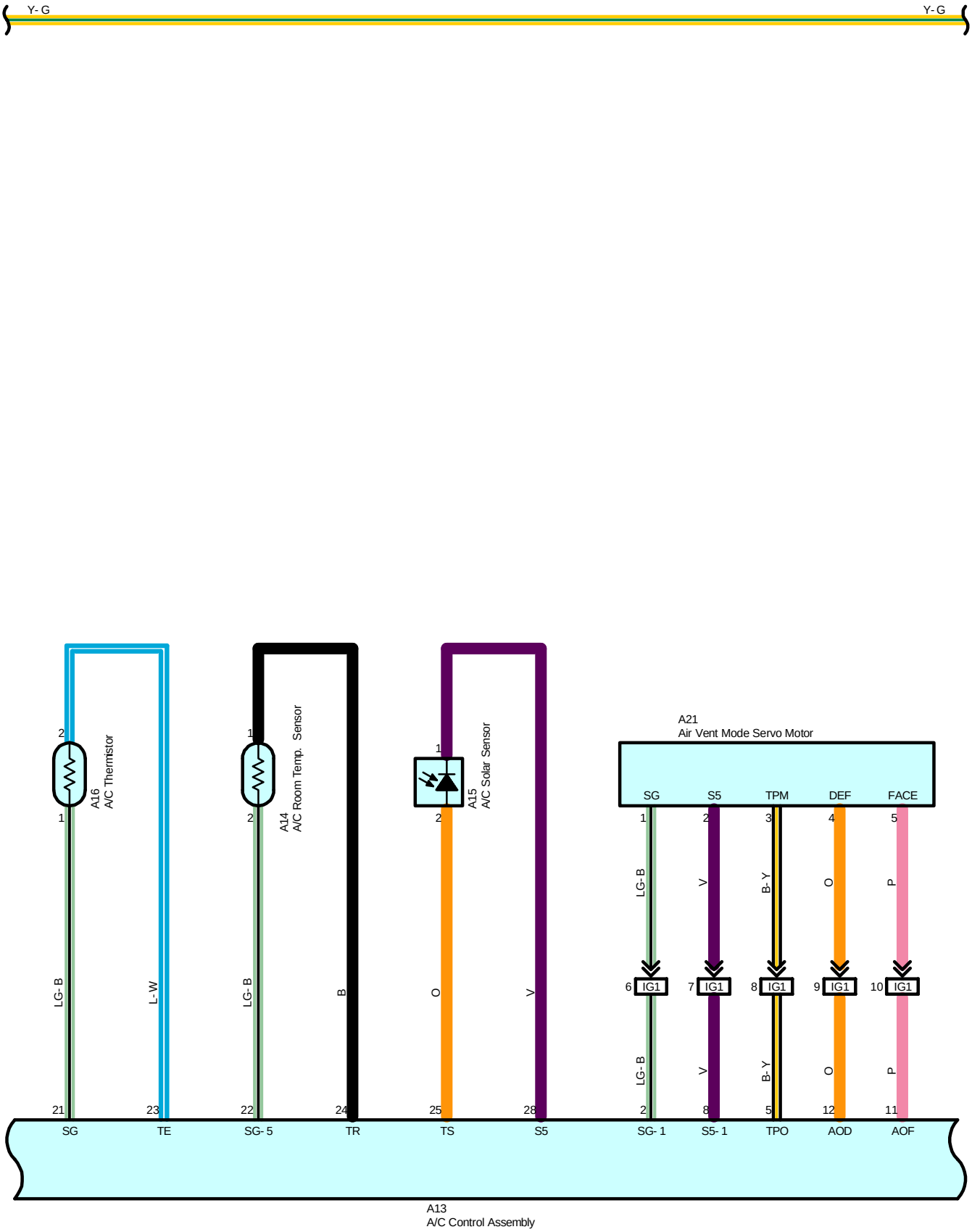
Y- G
Y- G
A16
A/C Thermistor
A14
A/C Room Temp. Sensor
A15
A/C Solar Sensor
A21
Air Vent Mode Servo Motor
SG
S5
TPM
DEF
FACE
IG1
LG- B
L- W
B
O
V
B- Y
P
SG
TE
SG- 5
TR
TS
S5
SG- 1
S5- 1
TPO
AOD
AOF
A13
A/C Control Assembly

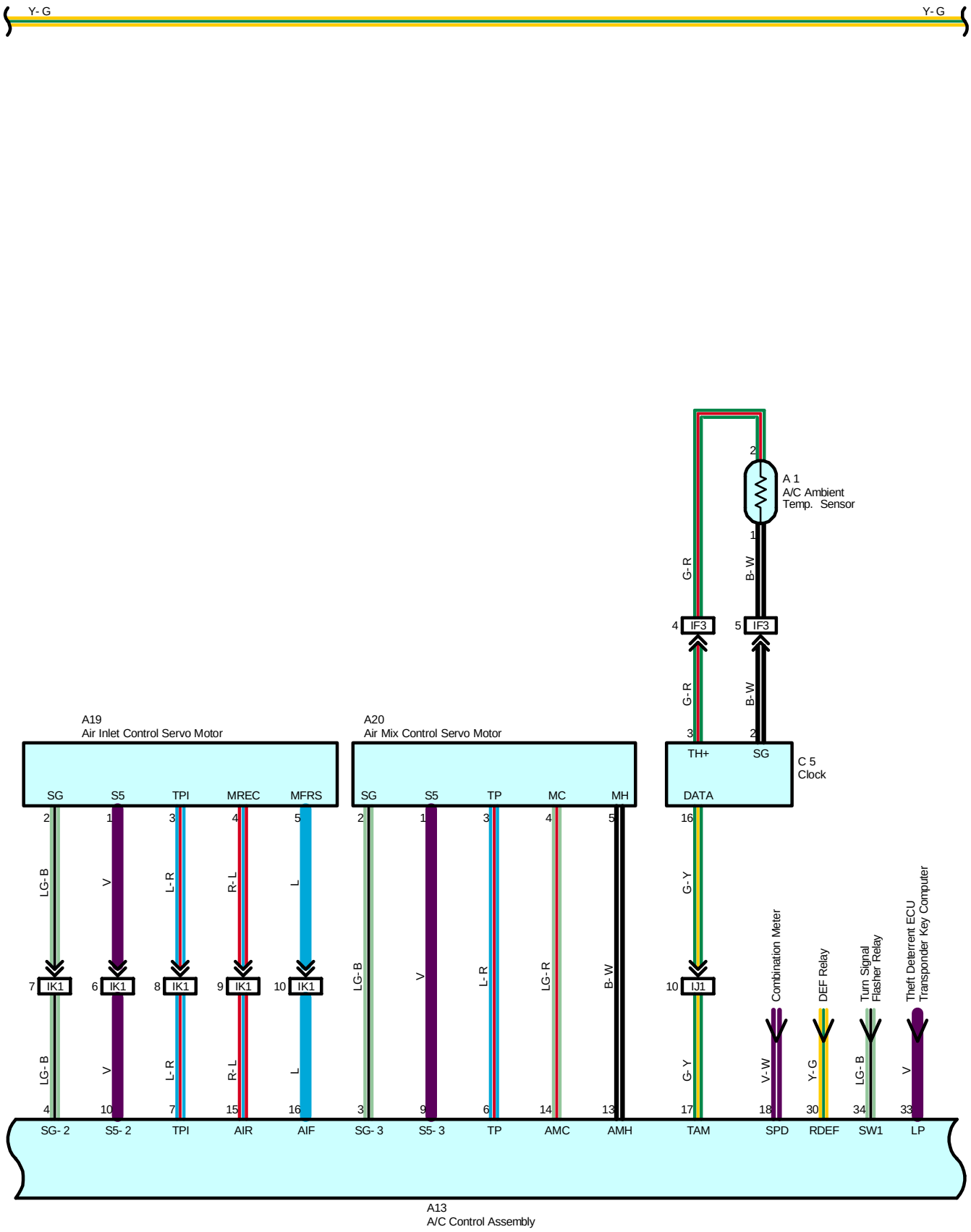
Y- G
Y- G
A 1
A/C Ambient
Temp. Sensor
G- R
B- W
IF3
IF3
A19
Air Inlet Control Servo Motor
A20
Air Mix Control Servo Motor
TH+
SG
C 5
Clock
DATA
SG
S5
TPI
MREC
MFRS
SG
S5
TP
MC
MH
LG- B
V
L- R
R- L
L
G- Y
IK1
IJ1
Combination Meter
DEF Relay
Turn Signal
Flasher Relay
Theft Deterrent ECU
Transponder Key Computer
V- W
Y- G
LG- B
V
SG- 2
S5- 2
TPI
AIR
AIF
SG- 3
S5- 3
TP
AMC
AMH
TAM
SPD
RDEF
SW1
LP
A13
A/C Control Assembly

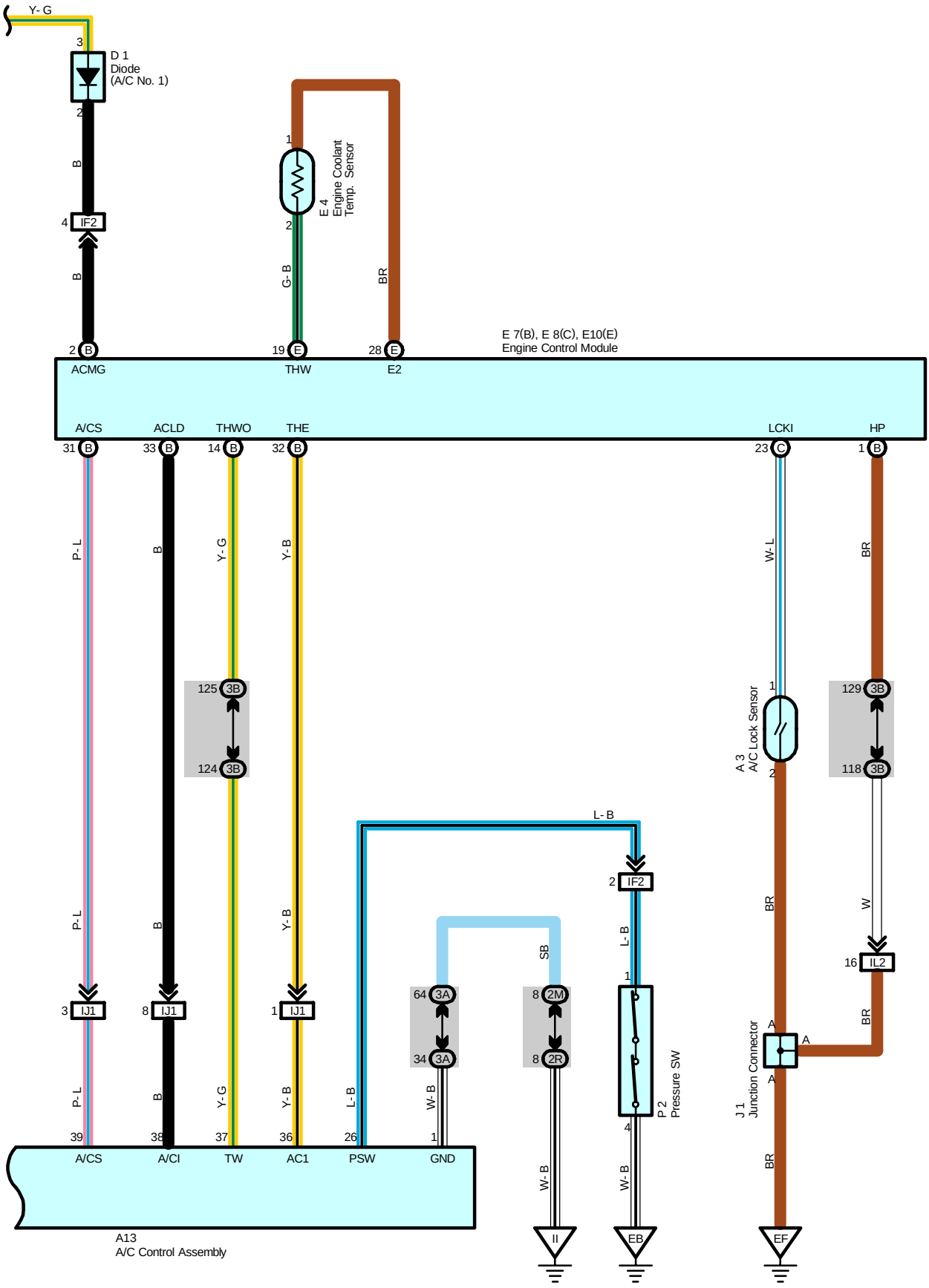
Y- G
3
D 1
Diode
(A/C No. 1)
2
B
4 IF2
B
2 B
ACMG
1
2
G- B
E 4
Engine Coolant
Temp. Sensor
BR
19 E
THW
28 E
E2
E 7(B), E 8(C), E10(E)
Engine Control Module
A/CS
ACLD
THWO
THE
LCKI
HP
31 B
33 B
14 B
32 B
23 C
1 B
P- L
B
Y- G
Y- B
W- L
BR
125 3B
124 3B
129 3B
118 3B
A 3
A/C Lock Sensor
1
2
L- B
2 IF2
SB
L- B
64 3A
34 3A
8 2M
8 2R
1
4
P 2
Pressure SW
W
16 IL2
BR
3 IJ1
8 IJ1
1 IJ1
A
A
A
J 1
Junction Connector
W- B
W- B
BR
39
38
37
36
26
1
A/CS
A/CI
TW
AC1
PSW
GND
II
EB
EF
A13
A/C Control Assembly

## System Outline

**1. Heater Blower Operation**

Manual operation

When the blower speed is set to a certain level using the blower control SW, the A/C control assembly sends the signals to the blower control to control the blower motor speed.

Auto operation

When the auto SW is turned on, the A/C control assembly sends the signals from various sensors and temperature SW to the blower control to automatically control the blower motor speed.

**2. Air Inlet Control Servo Motor Control**

When the FRESH/RECIRC select SW is set to RECIRC, the motor in the air inlet control servo motor starts rotating to move the damper toward the RECIRC side. Since the damper position is detected by the TERMINAL TPI of the A/C control assembly, the motor is continuously rotated until the damper reaches its stop position.When the FRESH/RECIRC select SW is set to FRESH, the motor in the air inlet control servo motor starts rotating to move the damper toward the FRESH side. Since the damper position is detected by the TERMINAL TPI of the A/C control assembly, the motor is continuously rotated until the damper reaches its stop position.

**3. Air Vent Mode Control Servo Motor Control**

When the mode select SW is pushed, the ECU in the A/C control assembly activates the air vent mode servo motor. This causes the servo motor to rotate to the position (FACE, BI-LEVEL, FOOT, FOOT/DEF, DEF) selected using the mode select SW, and moves the film damper.

**4. Air Mix Control Servo Motor Control**

When the temperature control SW is pressed, the ECU in the A/C control assembly sends a signal to the air mix control servo motor. This signal drives the motor to reach the temperature set by the temperature control SW, and moves the film damper.

**5. Air Conditioning Operation**

The A/C control assembly receives various signals, I.E., the engine RPM from the engine control module, out side air temperature signal from the A/C ambient temp. sensor, coolant temperature from the engine control module and the lock signal from the A/C compressor, etc.

When the engine is started and the A/C SW (A/C control assembly) is on, a signal is input to the A/C control assembly.

As a result, the ground circuit in A/C control assembly is closed and current flows from HTR (10A) fuse to TERMINAL 1 of the MG CLT relay to TERMINAL 3 of the diode to TERMINAL ACMG of the engine control module to TERMINAL HP to GROUND, turning the MG CLT relay on, so that the magnetic clutch is on and the A/C compressor operates.

At the same time, the engine control module. Detects the magnetic clutch is on and the A/C compressor operates.

If the A/C control assembly detects the following conditions, it stops the air conditioning:

* Evaporator outlet air is too low.
* There is a marked difference between the compressor speed and the engine speed.
* The refrigerant pressure is abnormally high or abnormally low.
* The engine speed is too low.
* Rapid acceleration occurs.

## Service Hints

**P2 Pressure SW**

1-4 : Open with the refrigerant pressure at less than approx. 216 kpa (2.2 kgf/cm$^2$, 31 psi) or more than approx. 3138 kpa (32 kgf/cm$^2$, 455 psi)

**A13 A/C Control Assembly**

B-Ground : Always approx. 12 volts
IG+ -Ground : Approx. 12 volts with the ignition SW at ON or ST position
AIF-Ground : Approx. 12 volts with the FRESH SW on
AIR-Ground : Approx. 12 volts with the RECIRC SW on
GND-Ground : Always continuity

### : Parts Location

| Code | See Page | Code | See Page | Code | | See Page |
|---|---|---|---|---|---|---|
| A1 | 36 (*1) | A20 | 40 | E7 | B | 40 |
| A3 | 36 (*1) | A21 | 40 | E8 | C | 40 |
| A13 | 40 | B3 | 40 | E10 | E | 40 |
| A14 | 40 | B4 | 40 | J1 | | 41 |
| A15 | 40 | C5 | 40 | P2 | | 37 (*1) |
| A16 | 40 | D1 | 36 (*1) | | | |
| A19 | 40 | E4 | 36 (*1) | | | |

### : Relay Blocks

| Code | See Page | Relay Blocks (Relay Block Location) |
|---|---|---|
| 1 | 22 | Engine Room R/B (Engine Compartment Left) |

### : Junction Block and Wire Harness Connector

| Code | See Page | Junction Block and Wire Harness (Connector Location) |
|---|---|---|
| 1F | 25 | Engine Room Main Wire and Engine Room J/B (Engine Compartment Left) |
| 1J | | |
| 1L | 25 | Engine Wire and Engine Room J/B (Engine Compartment Left) |
| 2G | 28 | Engine Room Main Wire and Driver Side J/B (Lower Finish Panel) |
| 2M | 29 | Instrument Panel Wire and Driver Side J/B (Lower Finish Panel) |
| 2R | | |
| 3A | 34 | Instrument Panel Wire and Passenger Side J/B (Instrument Panel Brace RH) |
| 3B | | |

### : Connector Joining Wire Harness and Wire Harness

| Code | See Page | Joining Wire Harness and Wire Harness (Connector Location) |
|---|---|---|
| IF2 | 50 | Engine Room Main Wire and Instrument Panel Wire (Right Side of Steering Column Tube) |
| IF3 | | |
| IF6 | | |
| IG1 | 50 | Instrument Panel Wire and Engine Room Main Wire (Instrument Panel Brace LH) |
| II1 | 52 | Instrument Panel Wire and Instrument Panel No.3 Wire (Behind the Glove Box) |
| IJ1 | 52 | Instrument Panel Wire and Instrument Panel Wire (Instrument Panel Reinforcement RH) |
| IK1 | 52 | Instrument Panel Wire and Cowl No.2 Wire (Behind the Glove Box) |
| IL2 | 52 | Engine Wire and Instrument Panel Wire (Behind the Glove Box) |

### : Ground Points

| Code | See Page | Ground Points Location |
|---|---|---|
| EB | 46 (*1) | Right Fender |
| EC | 46 (*1) | Left Fender |
| EF | 46 (*1) | Right Side of Cylinder Head |
| II | 50 | Cowl Side Panel LH |
| IN | 50 | Instrument Panel Reinforcement RH |

### : Splice Points

| Code | See Page | Wire Harness with Splice Points | Code | See Page | Wire Harness with Splice Points |
|---|---|---|---|---|---|
| I2 | 52 | Instrument Panel No.3 Wire | | | |

* 1 : 1MZ-FE, 3MZ-FE  * 2 : 2AZ-FE  * 3 : w/ Power Seat  * 4 : w/o Power Seat

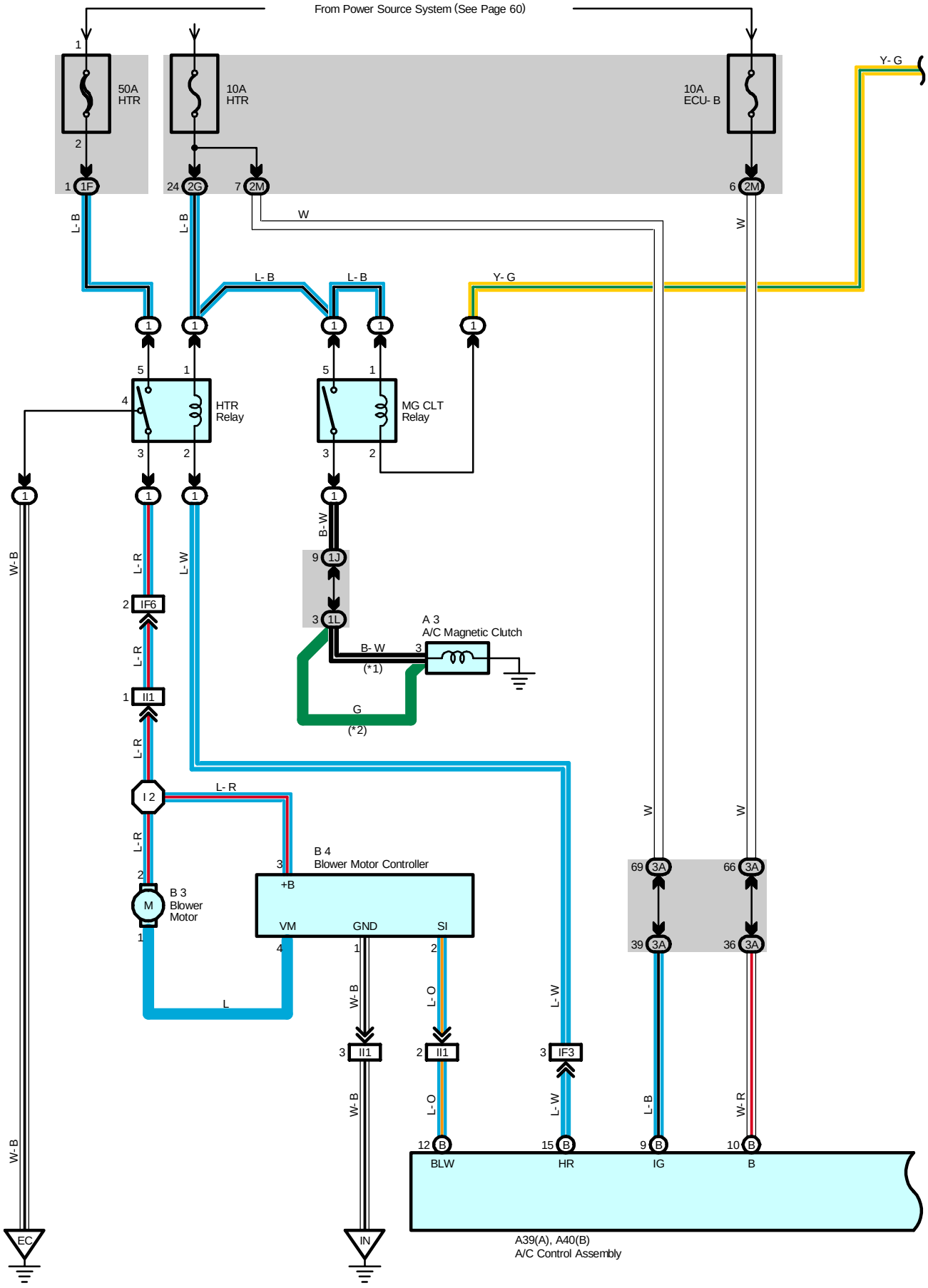
From Power Source System (See Page 60)
50A HTR
10A HTR
10A ECU- B
Y- G
1F
2G
2M
6 2M
W
L- B
HTR Relay
MG CLT Relay
1J
1L
A 3
A/C Magnetic Clutch
B- W
(*1)
G
(*2)
W- B
L- R
L- W
IF6
II1
I 2
B 4
Blower Motor Controller
+B
VM
GND
SI
B 3
Blower Motor
M
L
L- O
IF3
3A
69 3A
66 3A
39 3A
36 3A
BLW
HR
IG
B
W- R
EC
IN
A39(A), A40(B)
A/C Control Assembly




* 1 : TMC Made
* 2 : TMMK Made

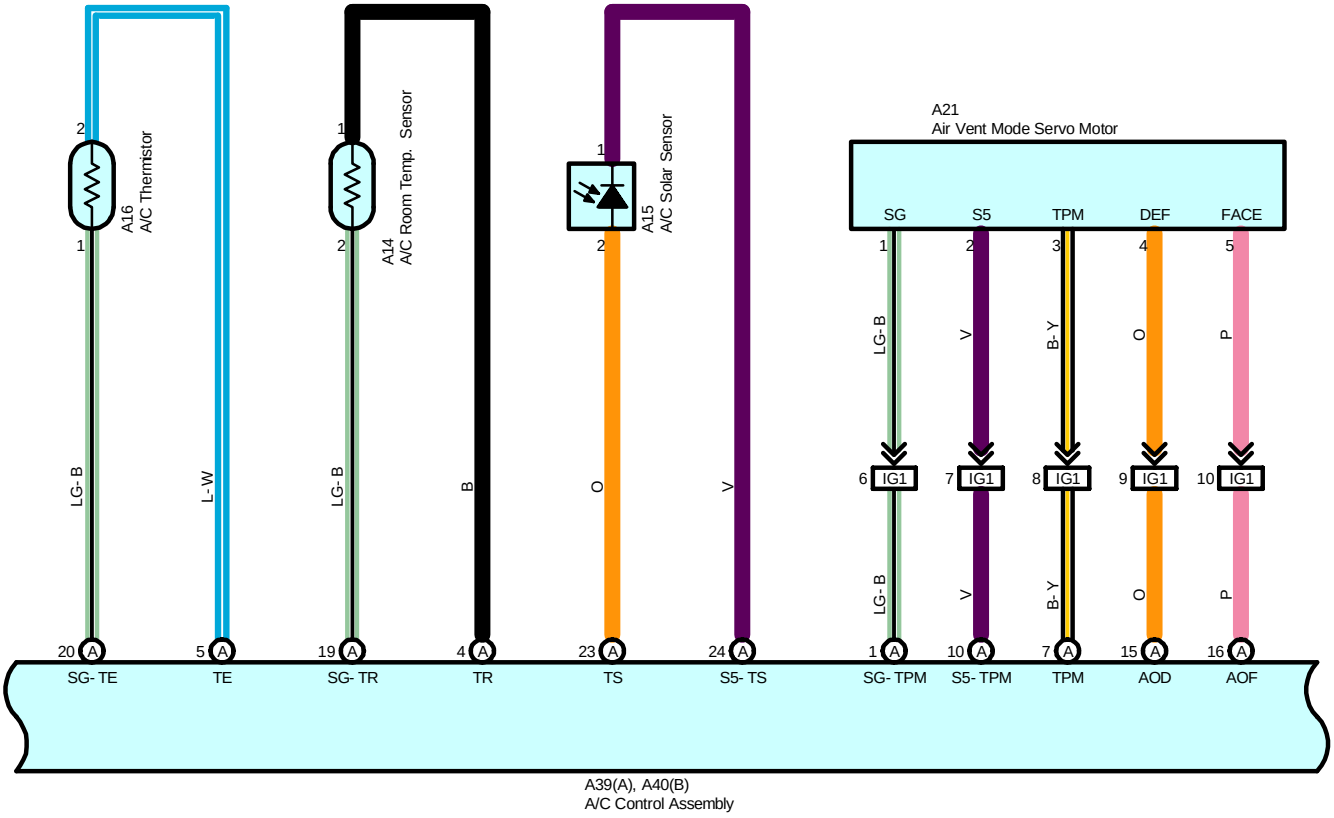

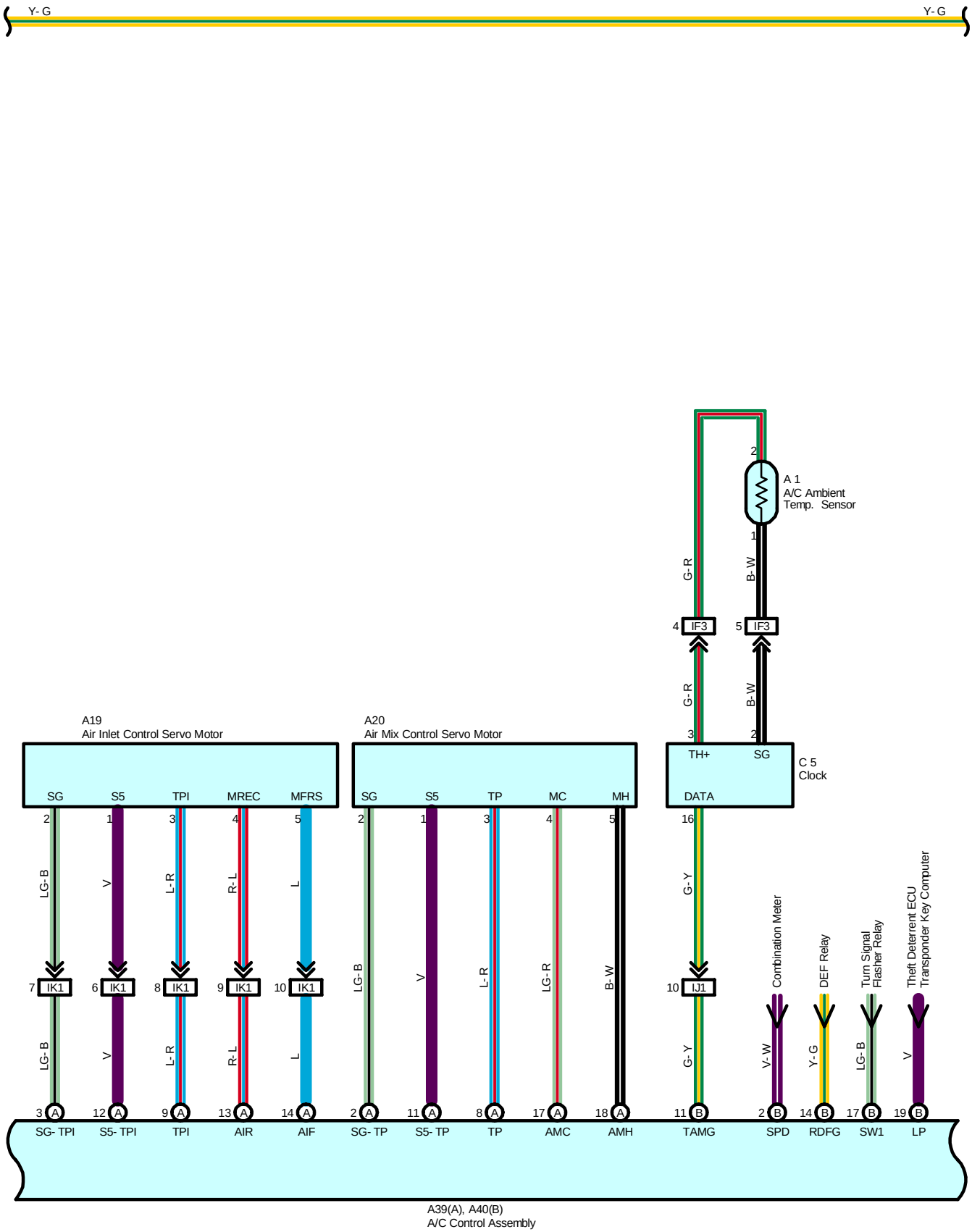
Y- G
Y- G
A 1
A/C Ambient
Temp. Sensor
G- R
B- W
IF3
IF3
A19
Air Inlet Control Servo Motor
A20
Air Mix Control Servo Motor
TH+
SG
C 5
Clock
DATA
SG
S5
TPI
MREC
MFRS
SG
S5
TP
MC
MH
LG- B
V
L- R
R- L
L
G- Y
IK1
IJ1
Combination Meter
DEF Relay
Turn Signal
Flasher Relay
Theft Deterrent ECU
Transponder Key Computer
V- W
Y- G
LG- B
V
SG- TPI
S5- TPI
TPI
AIR
AIF
SG- TP
S5- TP
TP
AMC
AMH
TAMG
SPD
RDFG
SW1
LP
A39(A), A40(B)
A/C Control Assembly

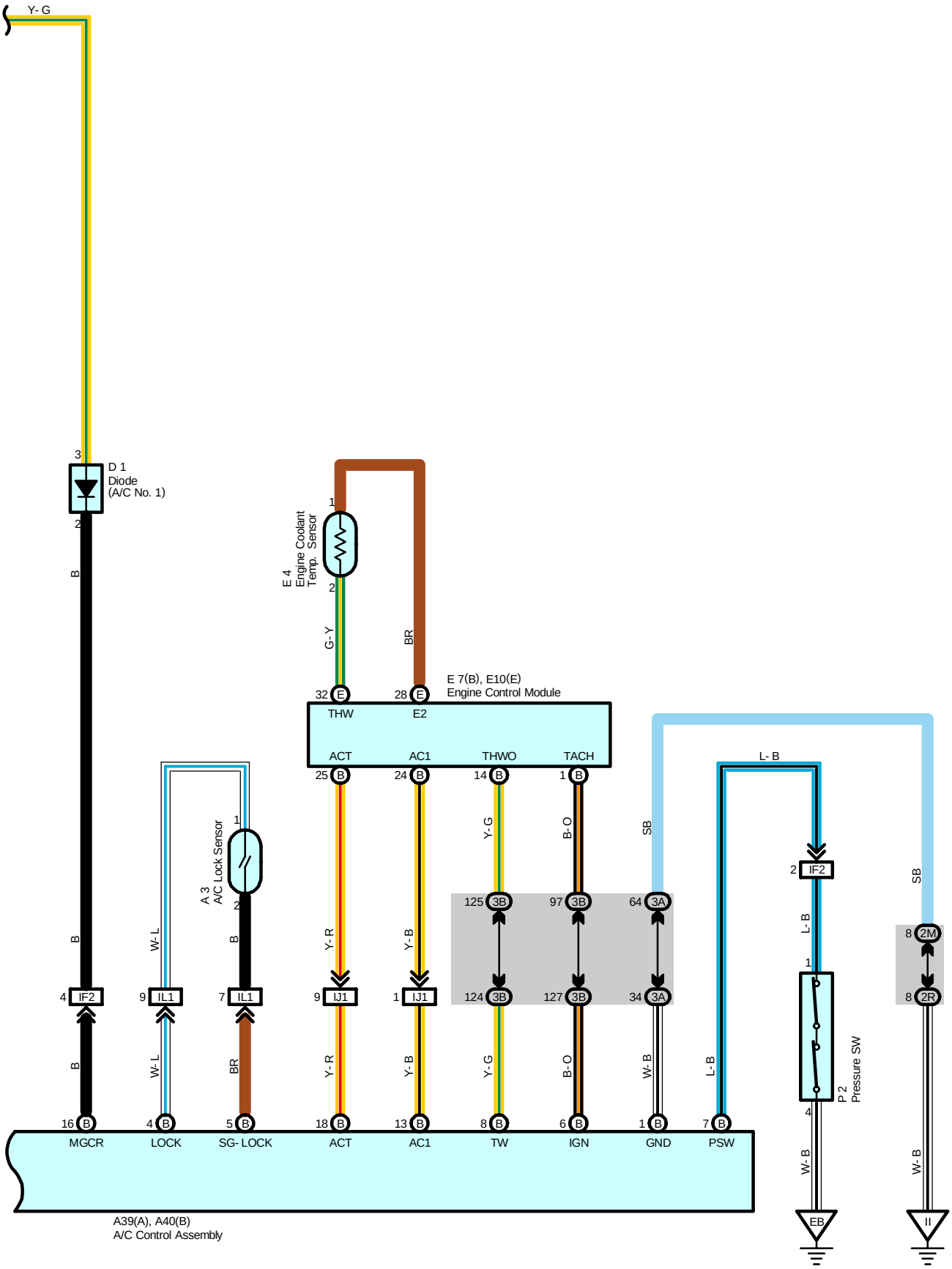
Y- G
3
D 1
Diode
(A/C No. 1)
2
B
B
4 IF2
B
16 B
MGCR
W- L
9 IL1
W- L
4 B
LOCK
A 3
A/C Lock Sensor
1
2
B
7 IL1
BR
5 B
SG- LOCK
E 4
Engine Coolant
Temp. Sensor
1
2
G- Y
BR
32 E
THW
28 E
E2
E 7(B), E10(E)
Engine Control Module
ACT
AC1
THWO
TACH
25 B
24 B
14 B
1 B
Y- R
Y- B
Y- G
B- O
9 IJ1
Y- R
18 B
ACT
1 IJ1
Y- B
13 B
AC1
125 3B
124 3B
Y- G
8 B
TW
97 3B
127 3B
B- O
6 B
IGN
SB
64 3A
34 3A
W- B
1 B
GND
L- B
7 B
PSW
L- B
2 IF2
L- B
1
4
W- B
EB
P 2
Pressure SW
SB
8 2M
8 2R
W- B
II
A39(A), A40(B)
A/C Control Assembly

## System Outline

**1. Heater Blower Operation**

Manual operation

When the blower speed is set to a certain level using the blower control SW, the A/C control assembly sends the signals to the blower control to control the blower motor speed.

Auto operation

When the auto SW is turned on, the A/C control assembly sends the signals from various sensors and temperature SW to the blower control to automatically control the blower motor speed.

**2. Air Inlet Control Servo Motor Control**

When the FRESH/RECIRC select SW is set to RECIRC, the motor in the air inlet control servo motor starts rotating to move the damper toward the RECIRC side. Since the damper position is detected by the TERMINAL TPI of the A/C control assembly, the motor is continuously rotated until the damper reaches its stop position.When the FRESH/RECIRC select SW is set to FRESH, the motor in the air inlet control servo motor starts rotating to move the damper toward the FRESH side. Since the damper position is detected by the TERMINAL TPI of the A/C control assembly, the motor is continuously rotated until the damper reaches its stop position.

**3. Air Vent Mode Control Servo Motor Control**

When the mode select SW is pushed, the ECU in the A/C control assembly activates the air vent mode servo motor. This causes the servo motor to rotate to the position (FACE, BI-LEVEL, FOOT, FOOT/DEF, DEF) selected using the mode select SW, and moves the film damper.

**4. Air Mix Control Servo Motor Control**

When the temperature control SW is pressed, the ECU in the A/C control assembly sends a signal to the air mix control servo motor. This signal drives the motor to reach the temperature set by the temperature control SW, and moves the film damper.

**5. Air Conditioning Operation**

The A/C control assembly receives various signals, I.E., the engine RPM from the engine control module, out side air temperature signal from the A/C ambient temp. sensor, coolant temperature from the engine control module and the lock signal from the A/C compressor, etc.

When the engine is started and the A/C SW (A/C control assembly) is on, a signal is input to the A/C control assembly.

As a result, the ground circuit in A/C control assembly is closed and current flows from HTR (10A) fuse to TERMINAL 1 of the MG CLT relay to TERMINAL 3 of the diode to TERMINAL MGCR of the A/C control assembly to TERMINAL GND to GROUND, turning the MG CLT relay on, so that the magnetic clutch is on and the A/C compressor operates.

At the same time, the engine control module. Detects the magnetic clutch is on and the A/C compressor operates.

If the A/C control assembly detects the following conditions, it stops the air conditioning:

* Evaporator outlet air is too low.
* There is a marked difference between the compressor speed and the engine speed.
* The refrigerant pressure is abnormally high or abnormally low.
* The engine speed is too low.
* Rapid acceleration occurs.

## Service Hints

**P2 Pressure SW**

1-4 : Open with the refrigerant pressure at less than approx. 216 kpa (2.2 kgf/cm$^2$, 31 psi) or more than approx. 3138 kpa (32 kgf/cm$^2$, 455 psi)

**A13 A/C Control Assembly**

B-Ground : Always approx. 12 volts
IG-Ground : Approx. 12 volts with the ignition SW at ON or ST position
AIF-Ground : Approx. 12 volts with the FRESH SW on
AIR-Ground : Approx. 12 volts with the RECIRC SW on
GND-Ground : Always continuity

### : Parts Location

| Code | See Page | Code | See Page | Code | See Page |
|---|---|---|---|---|---|
| A1 | 38 (*2) | A20 | 40 | C5 | 40 |
| A3 | 38 (*2) | A21 | 40 | D1 | 38 (*2) |
| A14 | 40 | A39 A | 40 | E4 | 38 (*2) |
| A15 | 40 | A40 B | 40 | E7 B | 40 |
| A16 | 40 | B3 | 40 | E10 E | 40 |
| A19 | 40 | B4 | 40 | P2 | 39 (*2) |

### : Relay Blocks

| Code | See Page | Relay Blocks (Relay Block Location) |
|---|---|---|
| 1 | 22 | Engine Room R/B (Engine Compartment Left) |

### : Junction Block and Wire Harness Connector

| Code | See Page | Junction Block and Wire Harness (Connector Location) |
|---|---|---|
| 1F | 25 | Engine Room Main Wire and Engine Room J/B (Engine Compartment Left) |
| 1J | | |
| 1L | 25 | Engine Wire and Engine Room J/B (Engine Compartment Left) |
| 2G | 28 | Engine Room Main Wire and Driver Side J/B (Lower Finish Panel) |
| 2M | 29 | Instrument Panel Wire and Driver Side J/B (Lower Finish Panel) |
| 2R | | |
| 3A | 34 | Instrument Panel Wire and Passenger Side J/B (Instrument Panel Brace RH) |
| 3B | | |

### : Connector Joining Wire Harness and Wire Harness

| Code | See Page | Joining Wire Harness and Wire Harness (Connector Location) |
|---|---|---|
| IF2 | 50 | Engine Room Main Wire and Instrument Panel Wire (Right Side of Steering Column Tube) |
| IF3 | | |
| IF6 | | |
| IG1 | 50 | Instrument Panel Wire and Engine Room Main Wire (Instrument Panel Brace LH) |
| II1 | 52 | Instrument Panel Wire and Instrument Panel No.3 Wire (Behind the Glove Box) |
| IJ1 | 52 | Instrument Panel Wire and Instrument Panel Wire (Instrument Panel Reinforcement RH) |
| IK1 | 52 | Instrument Panel Wire and Cowl No.2 Wire (Behind the Glove Box) |
| IL1 | 52 | Engine Wire and Instrument Panel Wire (Behind the Glove Box) |

### : Ground Points

| Code | See Page | Ground Points Location |
|---|---|---|
| EB | 48 (*2) | Right Fender |
| EC | 48 (*2) | Left Fender |
| II | 50 | Cowl Side Panel LH |
| IN | 50 | Instrument Panel Reinforcement RH |

### : Splice Points

| Code | See Page | Wire Harness with Splice Points | Code | See Page | Wire Harness with Splice Points |
|---|---|---|---|---|---|
| I2 | 52 | Instrument Panel No.3 Wire | | | |

* 1 : 1MZ-FE, 3MZ-FE * 2 : 2AZ-FE * 3 : w/ Power Seat * 4 : w/o Power Seat

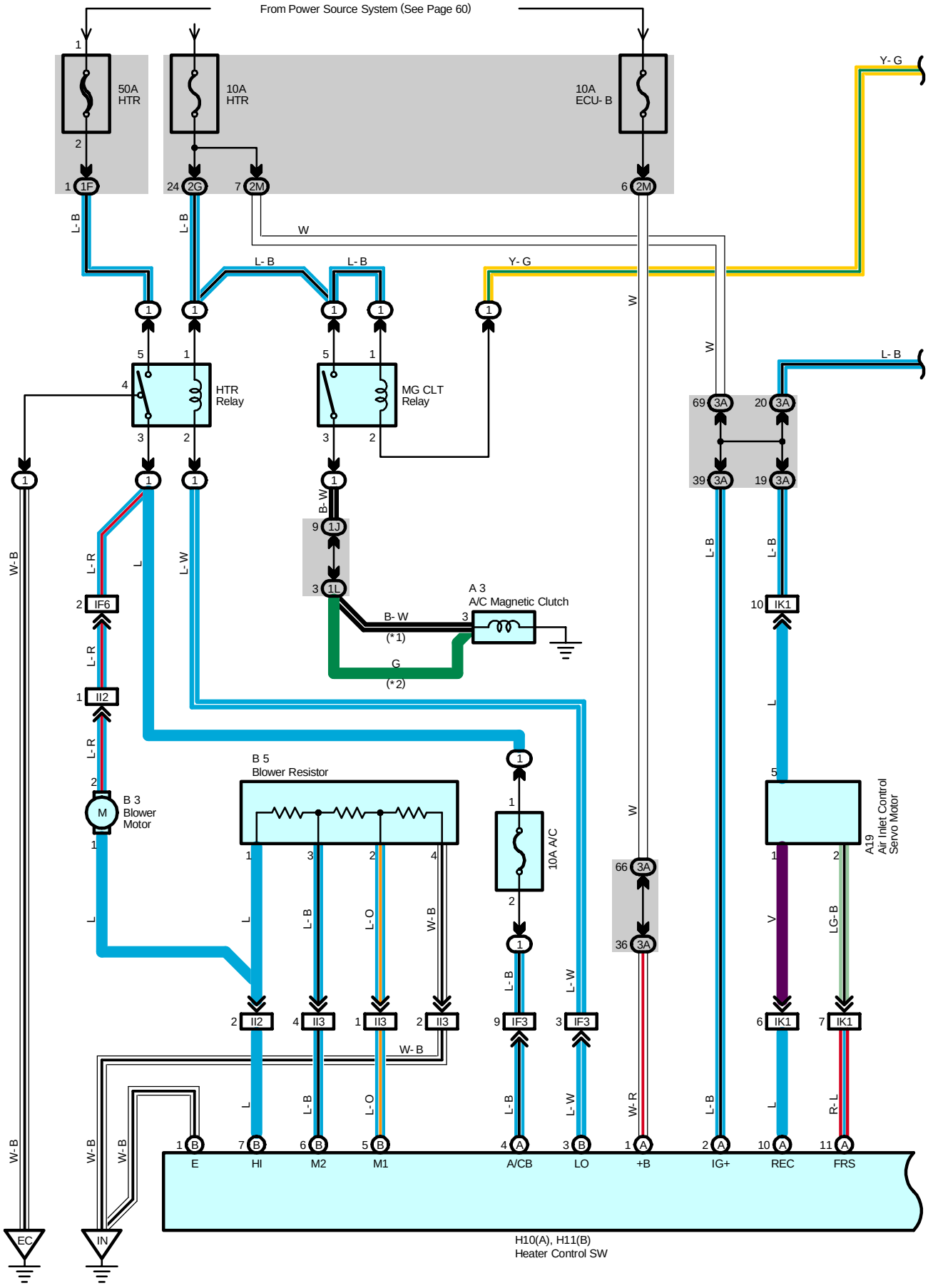
From Power Source System (See Page 60)
50A HTR
10A HTR
10A ECU- B
HTR Relay
MG CLT Relay
A 3
A/C Magnetic Clutch
B 5
Blower Resistor
B 3
Blower Motor
10A A/C
A19
Air Inlet Control Servo Motor
E
HI
M2
M1
A/CB
LO
+B
IG+
REC
FRS
EC
IN
H10(A), H11(B)
Heater Control SW

* 1 : TMC Made
* 2 : TMMK Made

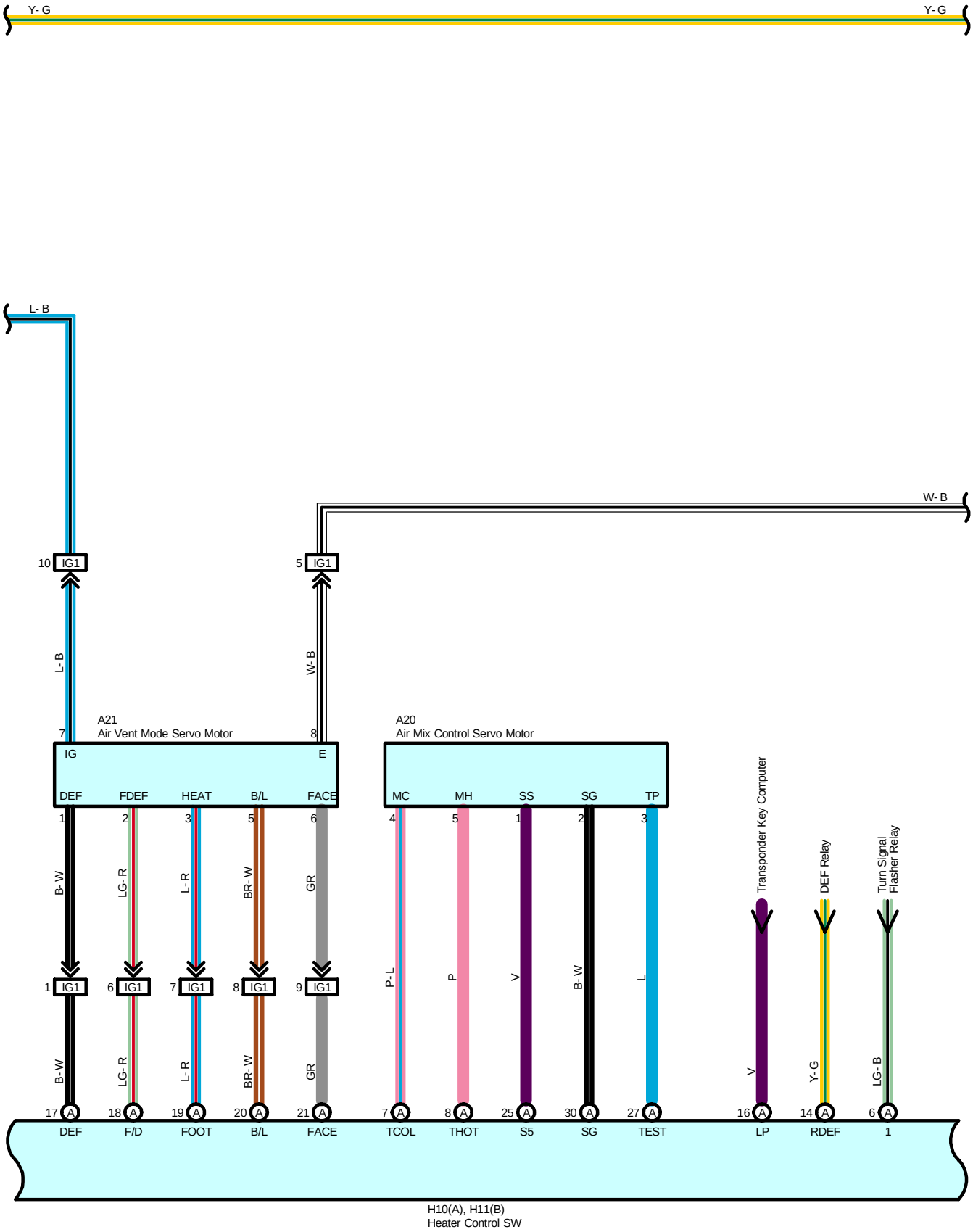

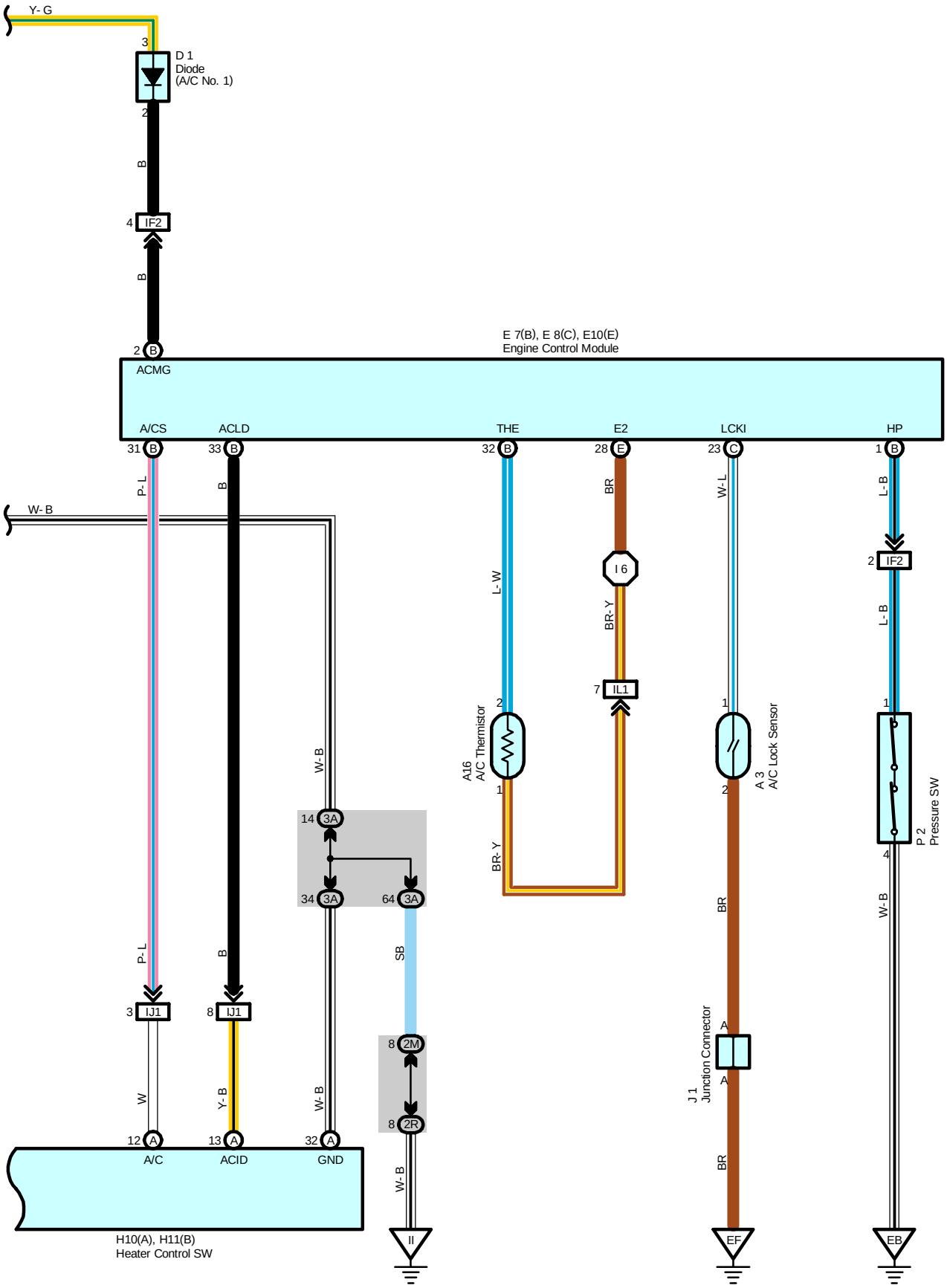
Y- G
3
D 1
Diode
(A/C No. 1)
2
B
4 IF2
B
2 B
E 7(B), E 8(C), E10(E)
Engine Control Module
ACMG
A/CS
ACLD
THE
E2
LCKI
HP
31 B
33 B
32 B
28 E
23 C
1 B
P- L
B
L- W
BR
W- L
L- B
W- B
I 6
BR- Y
7 IL1
2
1
A16
A/C Thermistor
A 3
A/C Lock Sensor
P 2
Pressure SW
14 3A
34 3A
64 3A
SB
3 IJ1
8 IJ1
8 2M
8 2R
W
Y- B
12 A
13 A
32 A
A/C
ACID
GND
J 1
Junction Connector
A
BR
H10(A), H11(B)
Heater Control SW
II
EF
EB

## System Outline

### 1. Heater Blower Motor Operation

* Low speed operation
When the heater control SW is moved to LO position, current flows to TERMINAL LO of the heater control SW to GROUND, activating the HTR relay. This causes the current to flow from the HTR (50A) fuse to TERMINAL 5 of the HTR relay to TERMINAL 3 to TERMINAL 2 of the blower motor to TERMINAL 1 to TERMINAL 1 of the blower resistor to TERMINAL 4 to GROUND, causing the blower motor to rotate at low speed.

* Medium speed operation (Operation at M1, M2)
When the blower SW is moved to M1 position, current flows to TERMINAL LO of the heater control SW to GROUND, turning the HTR relay to switch on. This causes the current to flow from the HTR (50A) fuse to TERMINAL 5 of the HTR relay to TERMINAL 3 to TERMINAL 2 of the blower motor to TERMINAL 1 to TERMINAL 1 of the blower resistor to TERMINAL 2 to TERMINAL (B) 5 of the heater control SW to GROUND. At this time, the blower resistance of the blower resistor is less than at low speed, so the blower motor rotates at medium low speed.
When the blower SW is moved to M2 position, current flows through the motor flows from TERMINAL 1 of the blower resistor to TERMINAL 3 to TERMINAL (B) 6 of the heater control SW to GROUND. At this time, resistance of the blower resistor is less than at M1 position, so the blower motor rotates at medium high speed.

* High speed operation
When the blower SW is moved to HIGH position, current flows to TERMINAL LO of the heater control SW to GROUND, turning the HTR relay to switch on.
This causes the current to flow from the HTR (50A) fuse to TERMINAL 5 of the HTR relay to TERMINAL 3 to TERMINAL 2 of the blower motor to TERMINAL 1 to TERMINAL (B) 7 of the heater control SW to GROUND, causing the blower motor to rotate at high speed.

## Service Hints

**HTR Relay**

5-3 : Closed with the ignition SW on and the heater control SW on

**MG CLT Relay**

5-3 : Closed with the ignition SW on, the heater control SW on and the A/C SW on or the heater control SW at DEF position

**P2 Pressure SW**

1-4 : Open with the pressure 2.0 kgf/cm$^2$ (29 psi, 196 kpa) or above 32 kgf/cm$^2$ (464 psi, 3138 kpa)

**: Parts Location**

| Code | See Page | Code | See Page | Code | See Page |
|---|---|---|---|---|---|
| A3 | 36 (*1) | B3 | 40 | E10 E | 40 |
| A16 | 40 | B5 | 40 | H10 A | 41 |
| A19 | 40 | D1 | 36 (*1) | H11 B | 41 |
| A20 | 40 | E7 B | 40 | J1 | 41 |
| A21 | 40 | E8 C | 40 | P2 | 37 (*1) |

**: Relay Blocks**

| Code | See Page | Relay Blocks (Relay Block Location) |
|---|---|---|
| 1 | 22 | Engine Room R/B (Engine Compartment Left) |

**: Junction Block and Wire Harness Connector**

| Code | See Page | Junction Block and Wire Harness (Connector Location) |
|---|---|---|
| 1F | 25 | Engine Room Main Wire and Engine Room J/B (Engine Compartment Left) |
| 1J | | |
| 1L | 25 | Engine Wire and Engine Room J/B (Engine Compartment Left) |
| 2G | 28 | Engine Room Main Wire and Driver Side J/B (Lower Finish Panel) |
| 2M | 29 | Instrument Panel Wire and Driver Side J/B (Lower Finish Panel) |
| 2R | | |
| 3A | 34 | Instrument Panel Wire and Passenger Side J/B (Instrument Panel Brace RH) |

* 1 : 1MZ-FE, 3MZ-FE * 2 : 2AZ-FE * 3 : w/ Power Seat * 4 : w/o Power Seat

**: Connector Joining Wire Harness and Wire Harness**

| Code | See Page | Joining Wire Harness and Wire Harness (Connector Location) |
|---|---|---|
| IF2 | 50 | Engine Room Main Wire and Instrument Panel Wire (Right Side of Steering Column Tube) |
| IF3 | | |
| IF6 | | |
| IG1 | 50 | Instrument Panel Wire and Engine Room Main Wire (Instrument Panel Brace LH) |
| II2 | 52 | Instrument Panel Wire and Instrument Panel No.3 Wire (Behind the Glove Box) |
| II3 | | |
| IJ1 | 52 | Instrument Panel Wire and Instrument Panel Wire (Instrument Panel Reinforcement RH) |
| IK1 | 52 | Instrument Panel Wire and Cowl No.2 Wire (Behind the Glove Box) |
| IL1 | 52 | Engine Wire and Instrument Panel Wire (Behind the Glove Box) |

**: Ground Points**

| Code | See Page | Ground Points Location |
|---|---|---|
| EB | 46 (*1) | Right Fender |
| EC | 46 (*1) | Left Fender |
| EF | 46 (*1) | Right Side of Cylinder Head |
| II | 50 | Cowl Side Panel LH |
| IN | 50 | Instrument Panel Reinforcement RH |

**: Splice Points**

| Code | See Page | Wire Harness with Splice Points | Code | See Page | Wire Harness with Splice Points |
|---|---|---|---|---|---|
| I6 | 52 | Engine Wire | | | |

* 1 : 1MZ-FE, 3MZ-FE * 2 : 2AZ-FE * 3 : w/ Power Seat * 4 : w/o Power Seat

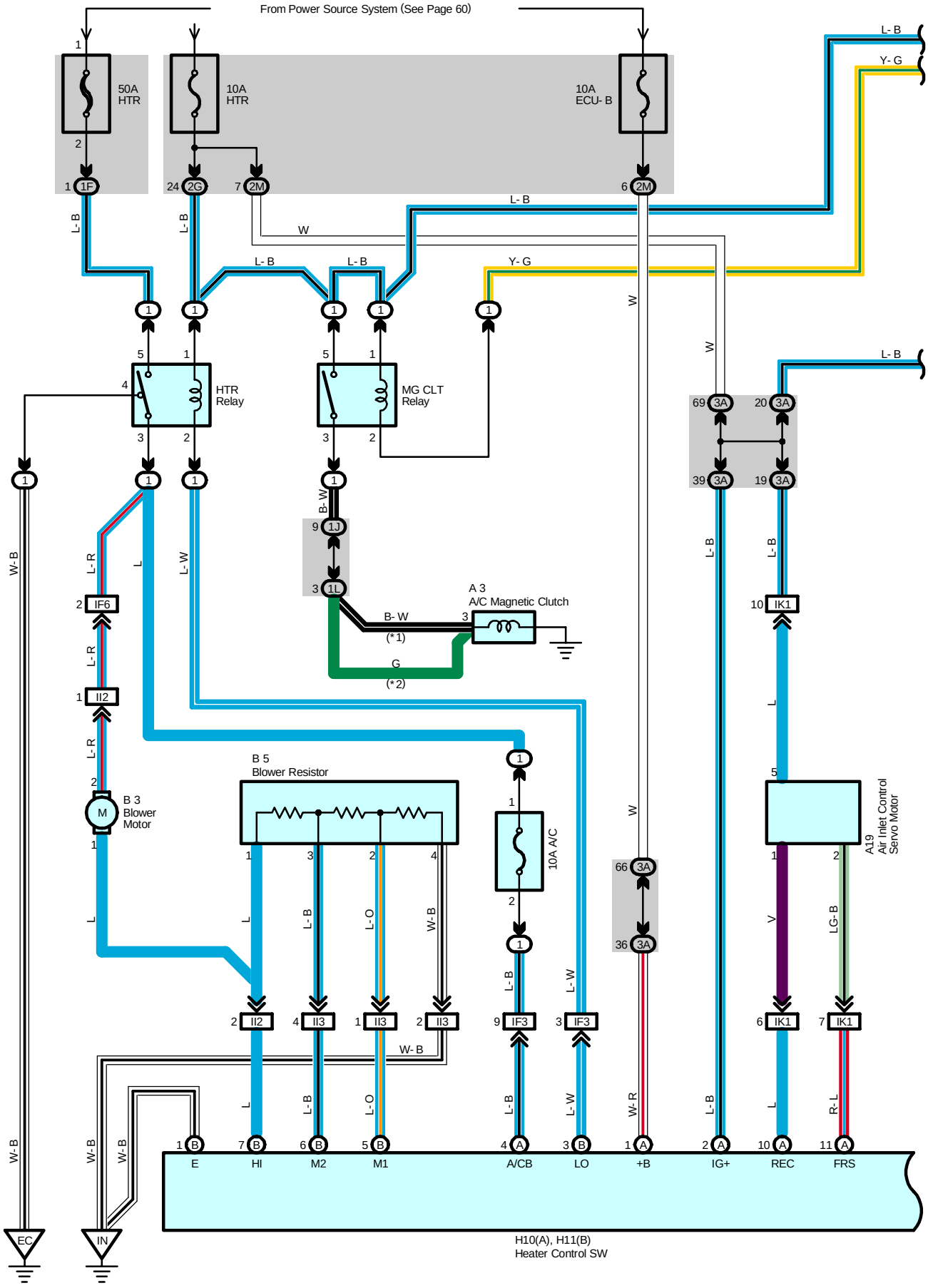
From Power Source System (See Page 60)
50A HTR
10A HTR
10A ECU- B
HTR Relay
MG CLT Relay
A 3
A/C Magnetic Clutch
B- W
(*1)
G
(*2)
B 5
Blower Resistor
B 3
Blower Motor
10A A/C
A19
Air Inlet Control Servo Motor
E
HI
M2
M1
A/CB
LO
+B
IG+
REC
FRS
EC
IN
H10(A), H11(B)
Heater Control SW

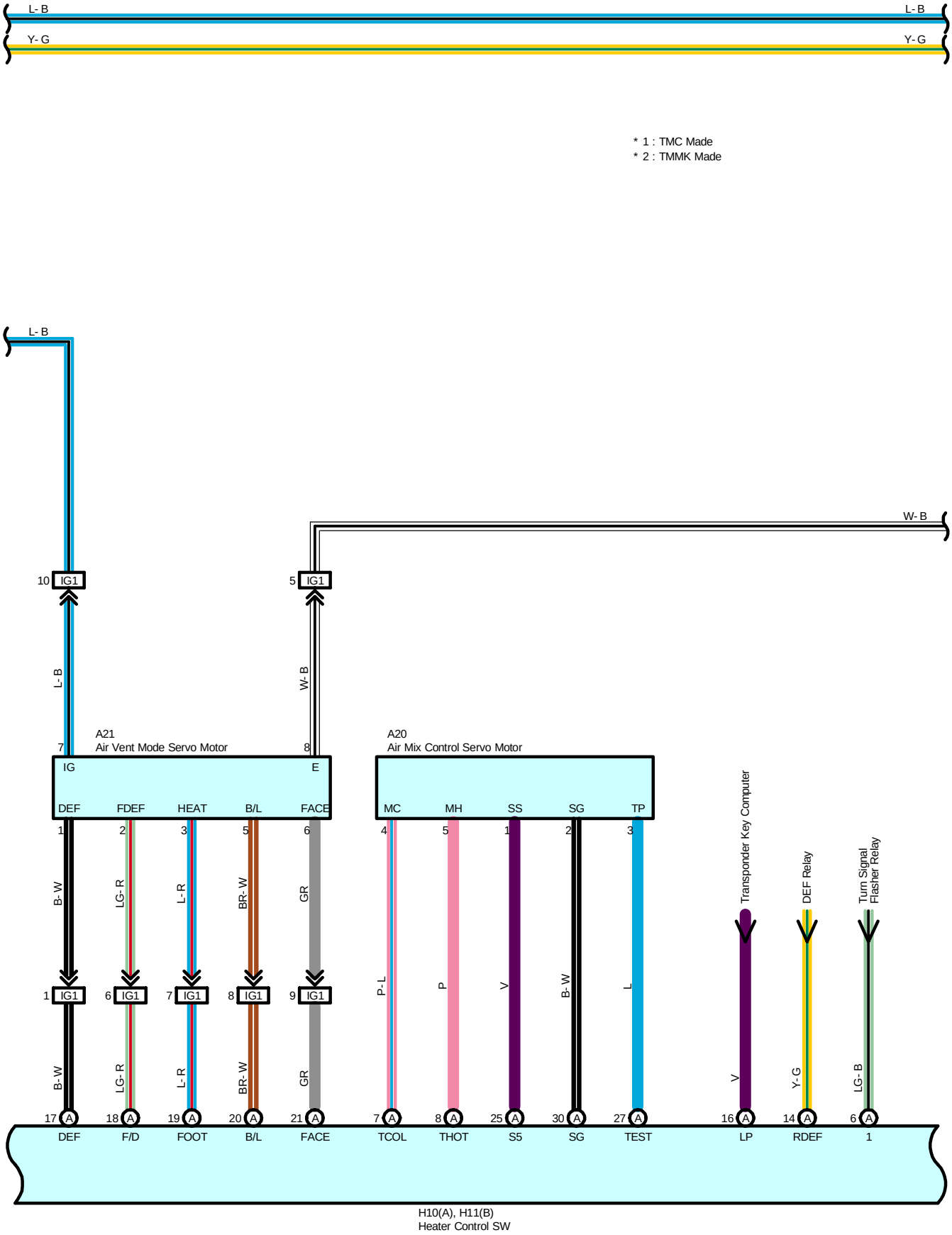
L- B
Y- G
L- B
Y- G
* 1 : TMC Made
* 2 : TMMK Made
L- B
W- B
10 IG1
5 IG1
L- B
W- B
A21
Air Vent Mode Servo Motor
7
8
IG
E
DEF
FDEF
HEAT
B/L
FACE
1
2
3
5
6
B- W
LG- R
L- R
BR- W
GR
A20
Air Mix Control Servo Motor
MC
MH
SS
SG
TP
4
5
1
2
3
P- L
P
V
B- W
L
Transponder Key Computer
DEF Relay
Turn Signal
Flasher Relay
1 IG1
6 IG1
7 IG1
8 IG1
9 IG1
B- W
LG- R
L- R
BR- W
GR
17 A
18 A
19 A
20 A
21 A
7 A
8 A
25 A
30 A
27 A
16 A
14 A
6 A
V
Y- G
LG- B
DEF
F/D
FOOT
B/L
FACE
TCOL
THOT
S5
SG
TEST
LP
RDEF
1
H10(A), H11(B)
Heater Control SW

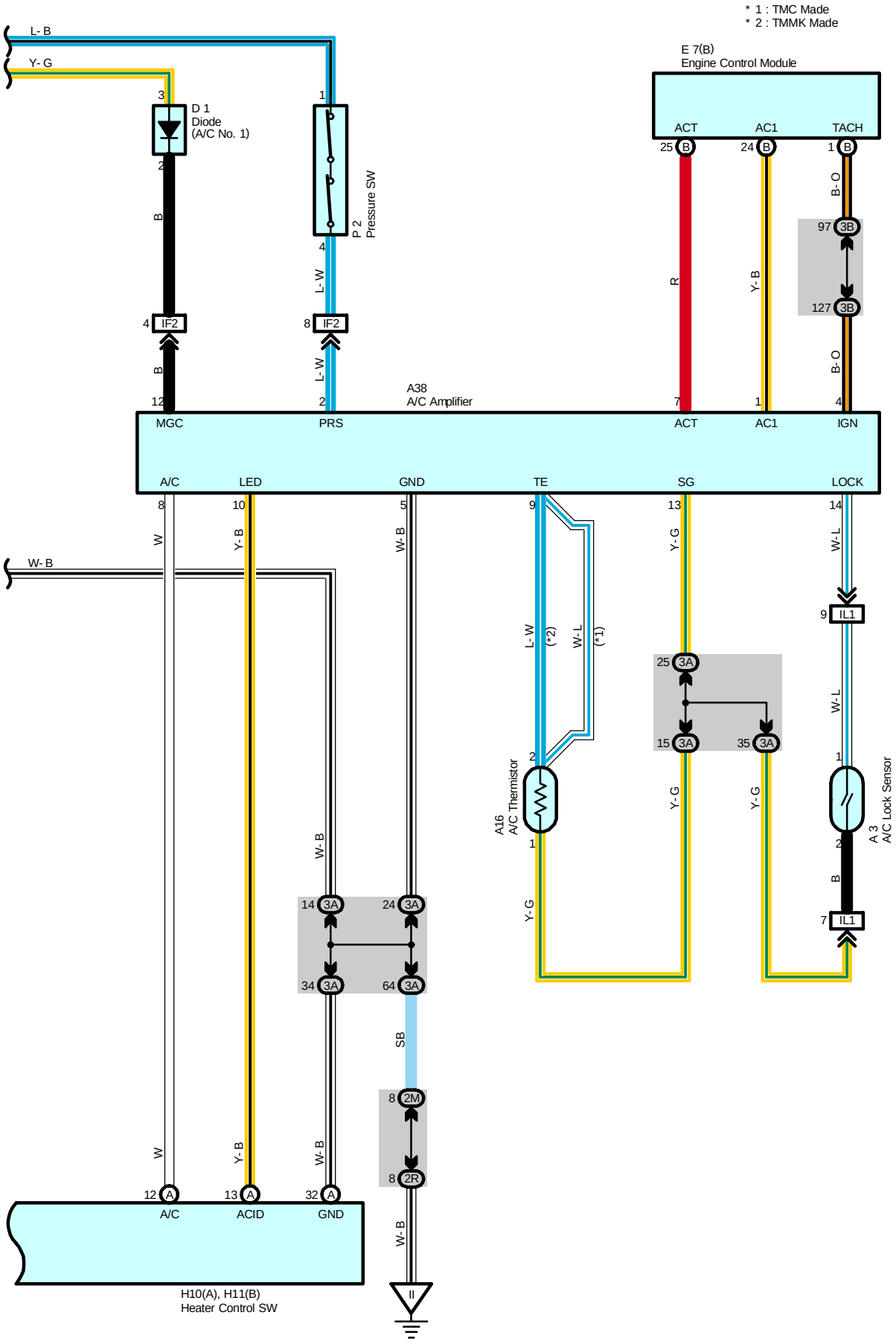
* 1 : TMC Made
* 2 : TMMK Made
E 7(B)
Engine Control Module
ACT
AC1
TACH
D 1
Diode
(A/C No. 1)
P 2
Pressure SW
A38
A/C Amplifier
MGC
PRS
ACT
AC1
IGN
A/C
LED
GND
TE
SG
LOCK
IF2
IF2
3B
3B
IL1
IL1
3A
3A
3A
3A
3A
3A
2M
2R
A16
A/C Thermistor
A 3
A/C Lock Sensor
A
A
A
A/C
ACID
GND
H10(A), H11(B)
Heater Control SW
L- B
Y- G
W- B
B
L- W
R
Y- B
B- O
W
Y- B
W- B
W- L
SB
(*1)
(*2)

## System Outline

### 1. Heater Blower Motor Operation

* Low speed operation
When the heater control SW is moved to LO position, current flows to TERMINAL LO of the heater control SW to GROUND, activating the HTR relay. This causes the current to flow from the HTR (50A) fuse to TERMINAL 5 of the HTR relay to TERMINAL 3 to TERMINAL 2 of the blower motor to TERMINAL 1 to TERMINAL 1 of the blower resistor to TERMINAL 4 to GROUND, causing the blower motor to rotate at low speed.

* Medium speed operation (Operation at M1, M2)
When the blower SW is moved to M1 position, current flows to TERMINAL LO of the heater control SW to GROUND, turning the HTR relay to switch on. This causes the current to flow from the HTR (50A) fuse to TERMINAL 5 of the HTR relay to TERMINAL 3 to TERMINAL 2 of the blower motor to TERMINAL 1 to TERMINAL 1 of the blower resistor to TERMINAL 2 to TERMINAL (B) 5 of the heater control SW to GROUND. At this time, the blower resistance of the blower resistor is less than at low speed, so the blower motor rotates at medium low speed.
When the blower SW is moved to M2 position, current flows through the motor flows from TERMINAL 1 of the blower resistor to TERMINAL 3 to TERMINAL (B) 6 of the heater control SW to GROUND. At this time, resistance of the blower resistor is less than at M1 position, so the blower motor rotates at medium high speed.

* High speed operation
When the blower SW is moved to HIGH position, current flows to TERMINAL LO of the heater control SW to GROUND, turning the HTR relay to switch on.
This causes the current to flow from the HTR (50A) fuse to TERMINAL 5 of the HTR relay to TERMINAL 3 to TERMINAL 2 of the blower motor to TERMINAL 1 to TERMINAL (B) 7 of the heater control SW to GROUND, causing the blower motor to rotate at high speed.

## Service Hints

**HTR Relay**

5-3 : Closed with the ignition SW on and the heater control SW on

**MG CLT Relay**

5-3 : Closed with the ignition SW on, the heater control SW on and the A/C SW on or the heater control SW at DEF position

**P2 Pressure SW**

1-4 : Open with the pressure 2.0 kgf/cm$^2$ (29 psi, 196 kpa) or above 32 kgf/cm$^2$ (464 psi, 3138 kpa)

**○ : Parts Location**

| Code | See Page | Code | See Page | Code | See Page |
|---|---|---|---|---|---|
| A3 | 38 (*2) | A38 | 40 | H10 A | 41 |
| A16 | 40 | B3 | 40 | H11 B | 41 |
| A19 | 40 | B5 | 40 | P2 | 39 (*2) |
| A20 | 40 | D1 | 38 (*2) | | |
| A21 | 40 | E7 B | 40 | | |

**▭ : Relay Blocks**

| Code | See Page | Relay Blocks (Relay Block Location) |
|---|---|---|
| 1 | 22 | Engine Room R/B (Engine Compartment Left) |

**▭ : Junction Block and Wire Harness Connector**

| Code | See Page | Junction Block and Wire Harness (Connector Location) |
|---|---|---|
| 1F | 25 | Engine Room Main Wire and Engine Room J/B (Engine Compartment Left) |
| 1J | | |
| 1L | 25 | Engine Wire and Engine Room J/B (Engine Compartment Left) |
| 2G | 28 | Engine Room Main Wire and Driver Side J/B (Lower Finish Panel) |
| 2M | 29 | Instrument Panel Wire and Driver Side J/B (Lower Finish Panel) |
| 2R | | |
| 3A | 34 | Instrument Panel Wire and Passenger Side J/B (Instrument Panel Brace RH) |
| 3B | | |

* 1 : 1MZ-FE, 3MZ-FE * 2 : 2AZ-FE * 3 : w/ Power Seat * 4 : w/o Power Seat

**: Connector Joining Wire Harness and Wire Harness**

| Code | See Page | Joining Wire Harness and Wire Harness (Connector Location) |
|---|---|---|
| IF2 | 50 | Engine Room Main Wire and Instrument Panel Wire (Right Side of Steering Column Tube) |
| IF3 | | |
| IF6 | | |
| IG1 | 50 | Instrument Panel Wire and Engine Room Main Wire (Instrument Panel Brace LH) |
| II2 | 52 | Instrument Panel Wire and Instrument Panel No.3 Wire (Behind the Glove Box) |
| II3 | | |
| IK1 | 52 | Instrument Panel Wire and Cowl No.2 Wire (Behind the Glove Box) |
| IL1 | 52 | Engine Wire and Instrument Panel Wire (Behind the Glove Box) |

**: Ground Points**

| Code | See Page | Ground Points Location |
|---|---|---|
| EC | 48 (*2) | Left Fender |
| II | 50 | Cowl Side Panel LH |
| IN | 50 | Instrument Panel Reinforcement RH |

* 1 : 1MZ-FE, 3MZ-FE * 2 : 2AZ-FE * 3 : w/ Power Seat * 4 : w/o Power Seat

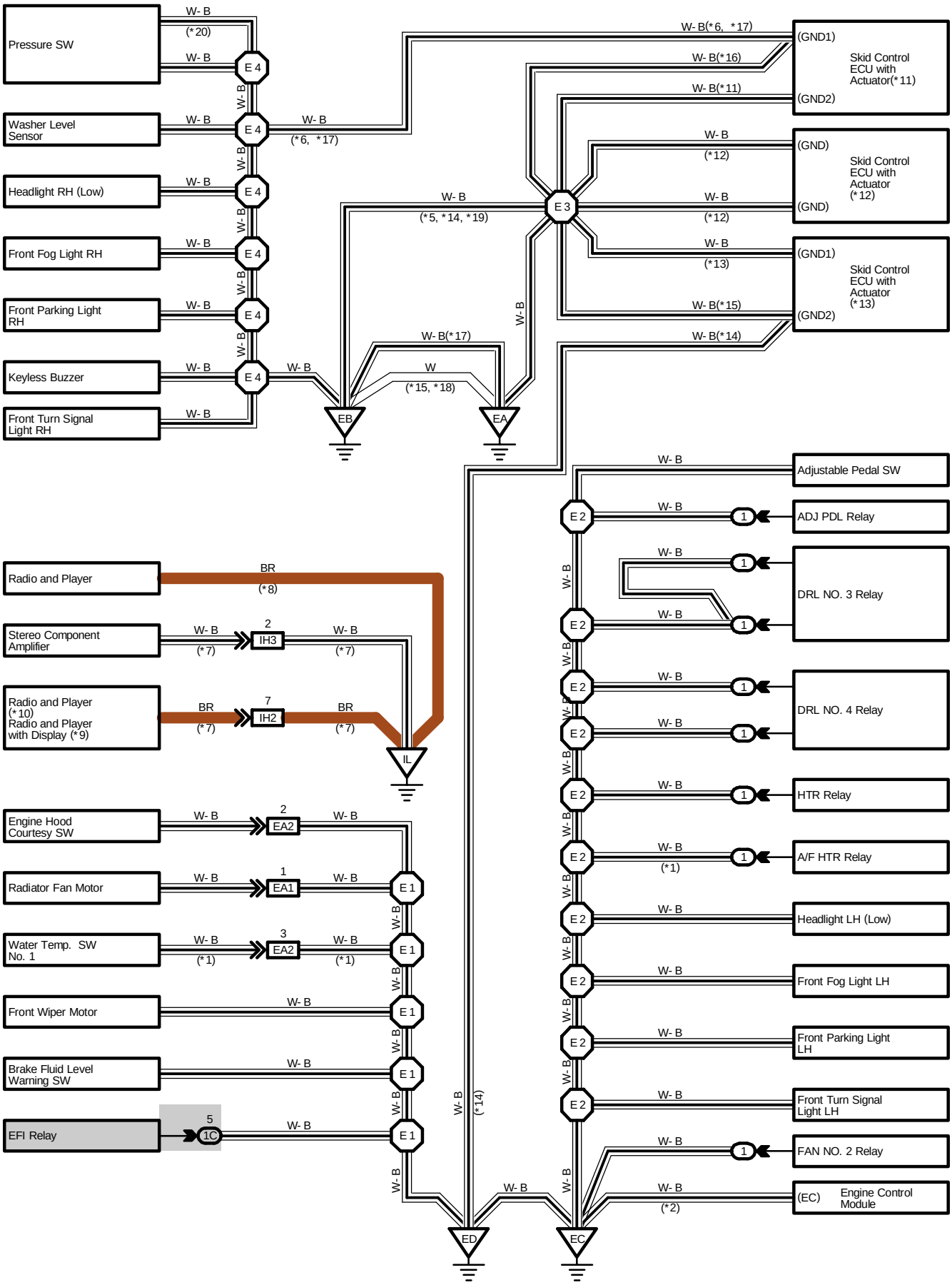
Pressure SW
Washer Level Sensor
Headlight RH (Low)
Front Fog Light RH
Front Parking Light RH
Keyless Buzzer
Front Turn Signal Light RH
W- B
(*20)
E 4
(*6, *17)
W- B(*6, *17)
W- B(*16)
W- B(*11)
(GND1)
(GND2)
Skid Control ECU with Actuator(*11)
(GND)
Skid Control ECU with Actuator (*12)
Skid Control ECU with Actuator (*13)
(*12)
(*13)
(*5, *14, *19)
E 3
W- B(*15)
W- B(*14)
W- B(*17)
W
(*15, *18)
EB
EA
Radio and Player
Stereo Component Amplifier
Radio and Player (*10)
Radio and Player with Display (*9)
BR
(*8)
(*7)
IH3
IH2
IL
Engine Hood Courtesy SW
Radiator Fan Motor
Water Temp. SW No. 1
Front Wiper Motor
Brake Fluid Level Warning SW
EFI Relay
EA2
EA1
(*1)
E 1
1C
(*14)
ED
EC
Adjustable Pedal SW
ADJ PDL Relay
DRL NO. 3 Relay
DRL NO. 4 Relay
HTR Relay
A/F HTR Relay
Headlight LH (Low)
Front Fog Light LH
Front Parking Light LH
Front Turn Signal Light LH
FAN NO. 2 Relay
(EC) Engine Control Module
(*2)
E 2

* 1 : 1MZ- FE, 3MZ- FE
* 2 : 2AZ- FE
* 3 : Automatic A/C
* 4 : Manual A/C
* 5 : TMC Made
* 6 : TMMK Made
* 7 : Separate Type Amplifier
* 8 : Built- in Type Amplifier
* 9 : w/ Navigation System
*10 : w/o Navigation System
*11 : w/ VSC
*12 : TMC Made w/o VSC
*13 : TMMK Made w/o VSC
*14 : *13 w/ Power Adjustable Pedals
*15 : *13 w/o Power Adjustable Pedals
*16 : w/ VSC TMC Made 2AZ- FE
*17 : w/ VSC TMC Made 1MZ- FE, w/ VSC TMC Made 3MZ- FE
*18 : w/ VSC TMMK Made 2AZ- FE
*19 : w/ VSC TMMK Made 1MZ- FE, w/ VSC TMMK Made 3MZ- FE
*20 : Automatic A/C, Manual A/C 1MZ- FE, Manual A/C 3MZ- FE

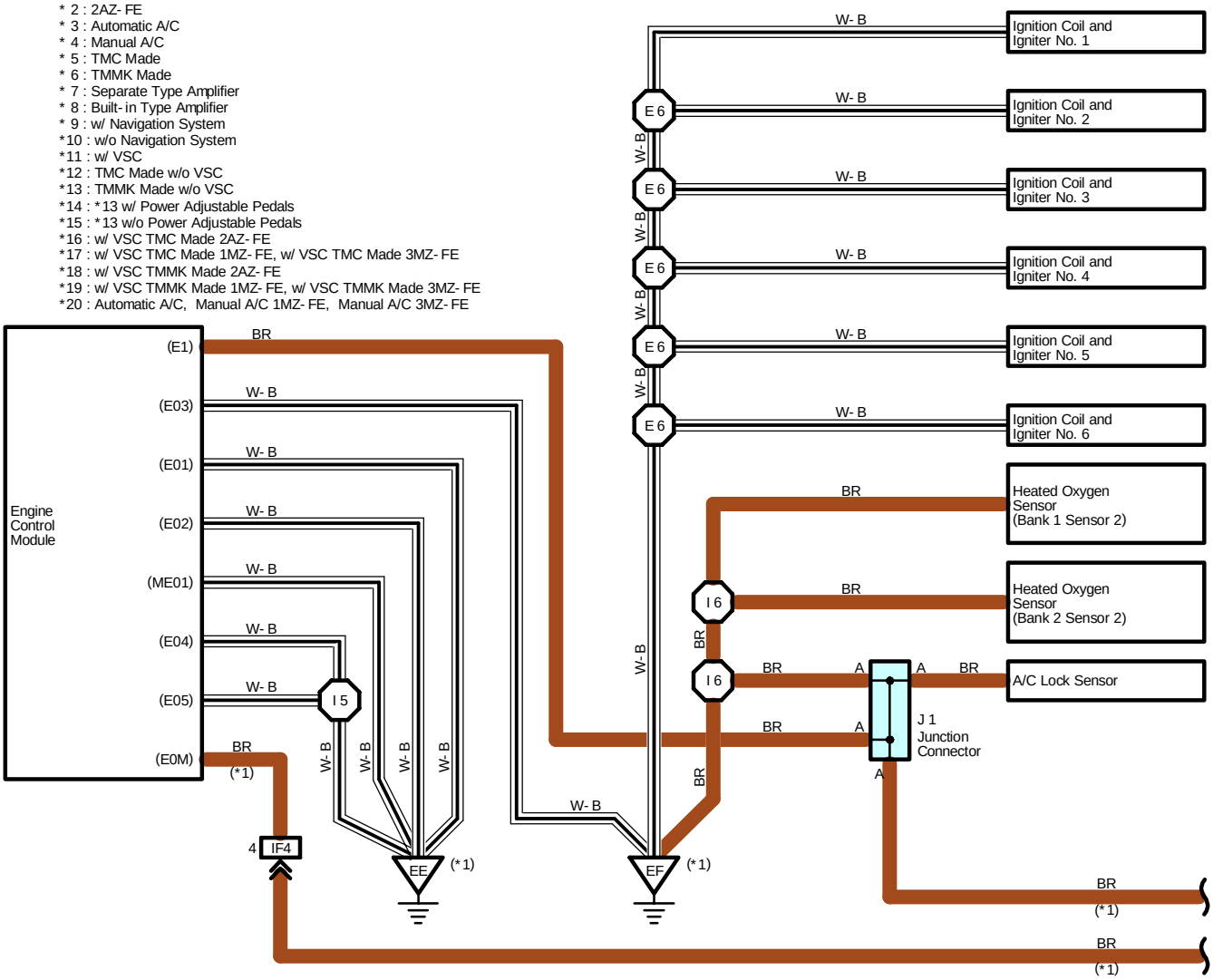


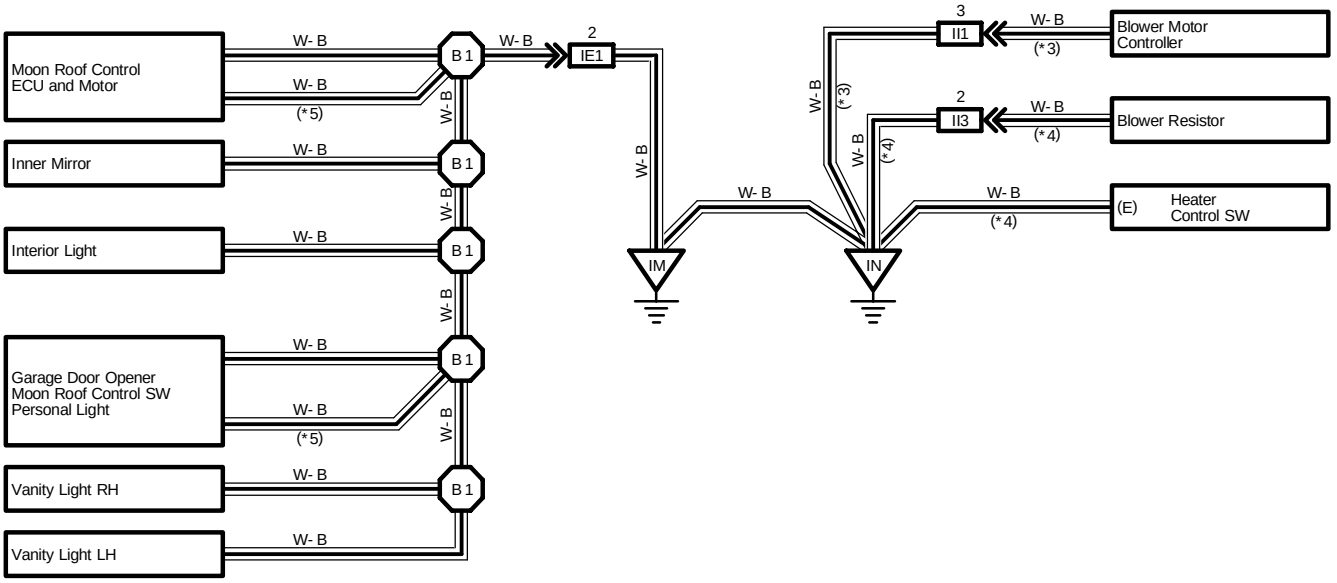

# I GROUND POINT

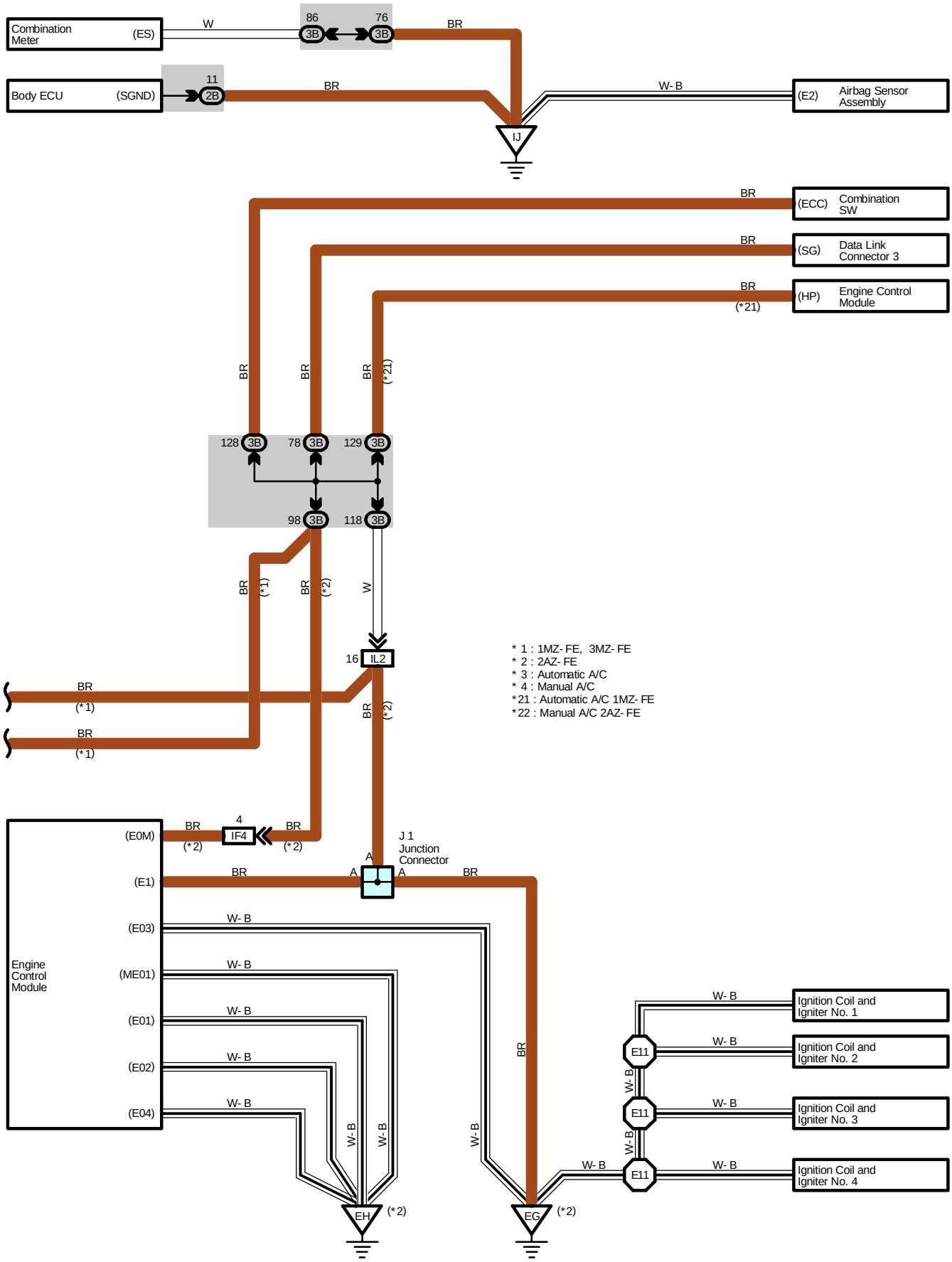

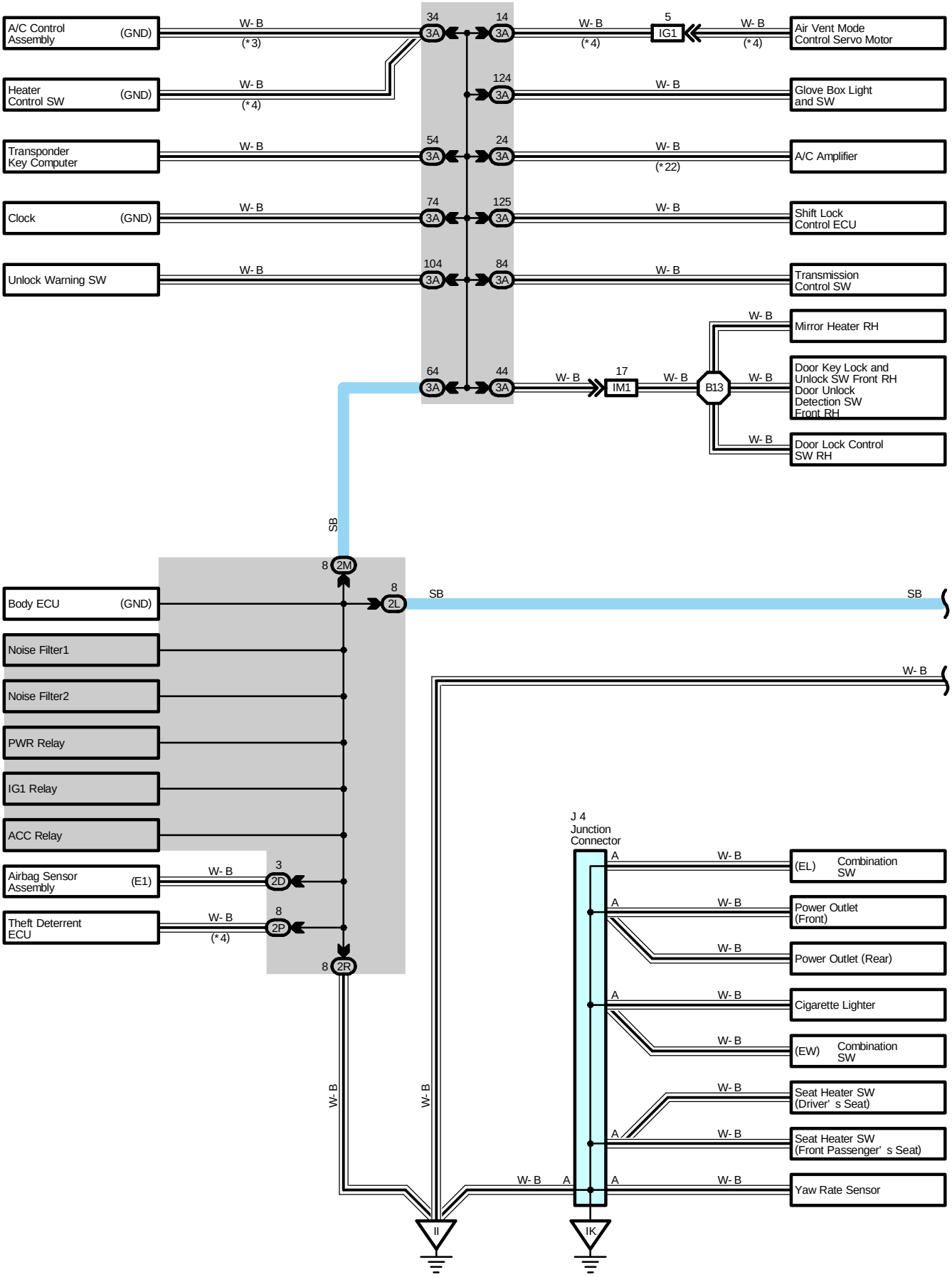
A/C Control Assembly
(GND)
W-B
(*3)
34
3A
14
3A
W-B
(*4)
5
IG1
W-B
(*4)
Air Vent Mode Control Servo Motor
Heater Control SW
(GND)
W-B
(*4)
124
3A
W-B
Glove Box Light and SW
Transponder Key Computer
W-B
54
3A
24
3A
W-B
(*22)
A/C Amplifier
Clock
(GND)
W-B
74
3A
125
3A
W-B
Shift Lock Control ECU
Unlock Warning SW
W-B
104
3A
84
3A
W-B
Transmission Control SW
W-B
Mirror Heater RH
64
3A
44
3A
W-B
17
IM1
W-B
B13
W-B
Door Key Lock and Unlock SW Front RH
Door Unlock Detection SW Front RH
W-B
Door Lock Control SW RH
SB
8
2M
Body ECU
(GND)
8
2L
SB
SB
Noise Filter1
Noise Filter2
PWR Relay
IG1 Relay
ACC Relay
W-B
Airbag Sensor Assembly
(E1)
W-B
3
2D
Theft Deterrent ECU
W-B
(*4)
8
2P
8
2R
W-B
W-B
J 4
Junction Connector
A
W-B
(EL)
Combination SW
A
W-B
Power Outlet (Front)
W-B
Power Outlet (Rear)
A
W-B
Cigarette Lighter
W-B
(EW)
Combination SW
W-B
Seat Heater SW (Driver's Seat)
A
W-B
Seat Heater SW (Front Passenger's Seat)
W-B
A
A
W-B
Yaw Rate Sensor
II
IK

* 5 : TMC Made
* 6 : TMMK Made
*21 : Automatic A/C 1MZ- FE
*23 : w/ Power Seat
*24 : w/o Power Seat
*25 : w/ Rear Spoiler
*26 : w/o Rear Spoiler

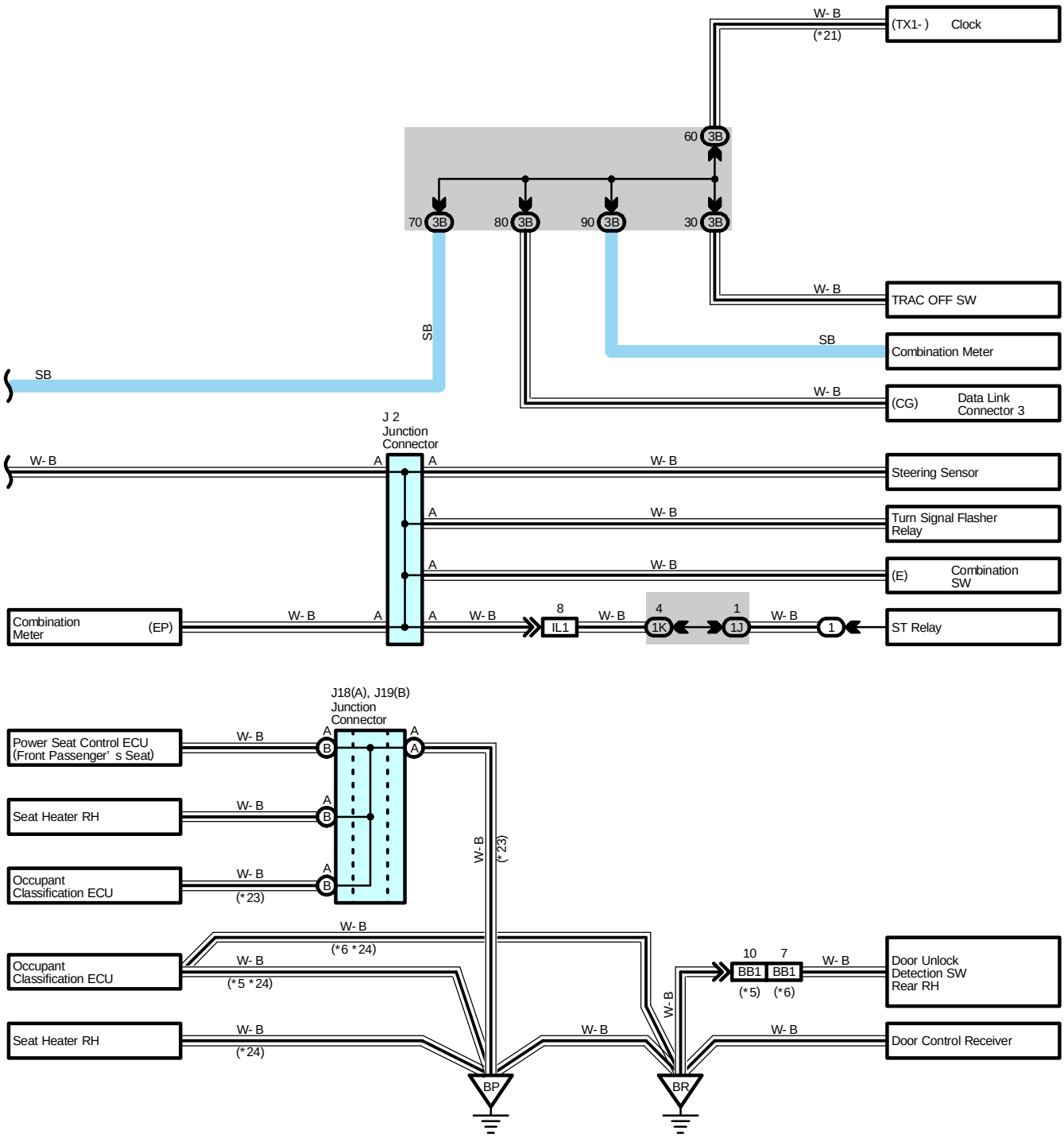

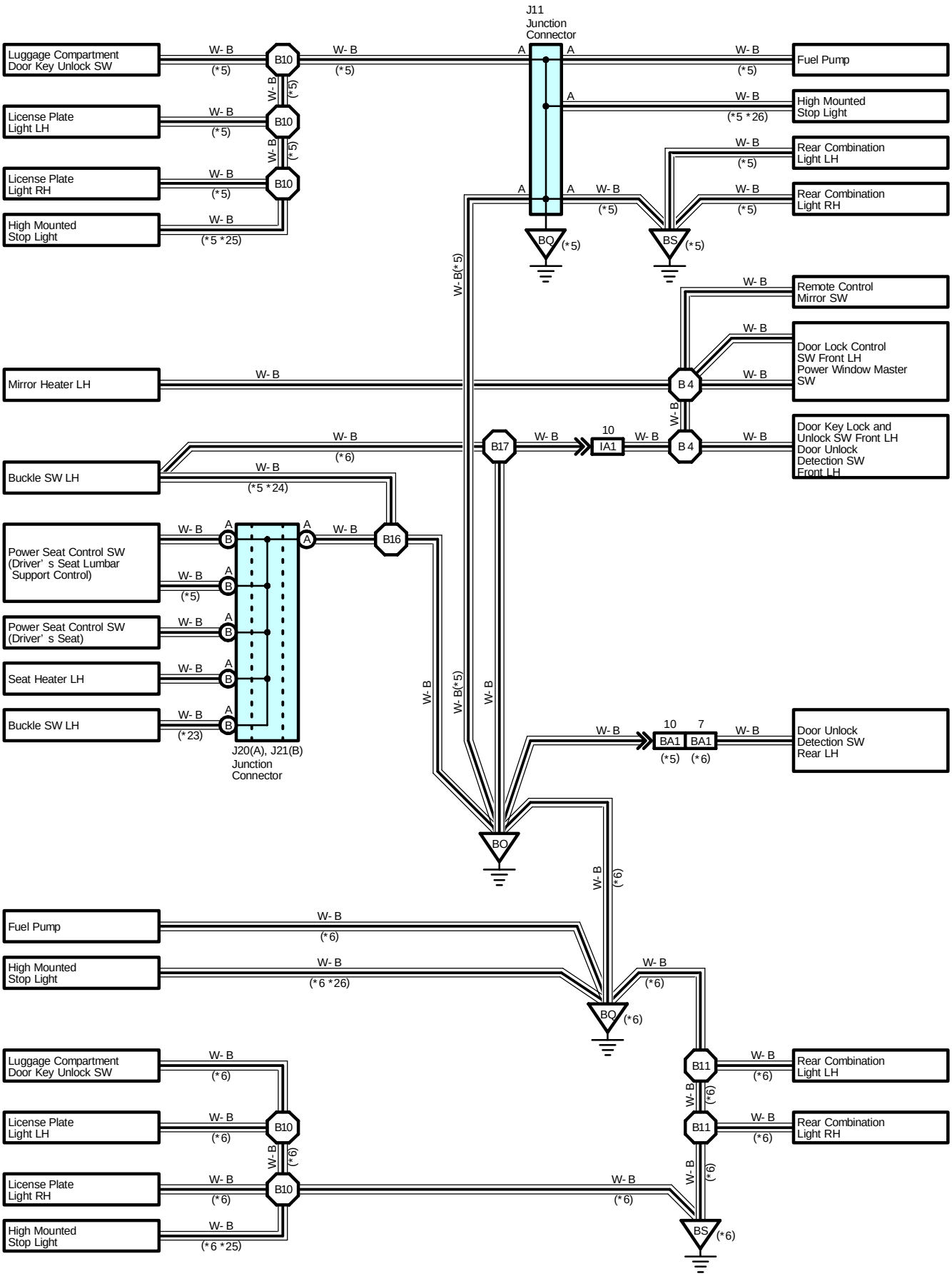
J11
Junction
Connector
Luggage Compartment
Door Key Unlock SW
License Plate
Light LH
License Plate
Light RH
High Mounted
Stop Light
B10
Fuel Pump
High Mounted
Stop Light
Rear Combination
Light LH
Rear Combination
Light RH
BO
BS
Remote Control
Mirror SW
Door Lock Control
SW Front LH
Power Window Master
SW
Mirror Heater LH
B4
Door Key Lock and
Unlock SW Front LH
Door Unlock
Detection SW
Front LH
B17
IA1
Buckle SW LH
B16
Power Seat Control SW
(Driver' s Seat Lumbar
Support Control)
Power Seat Control SW
(Driver' s Seat)
Seat Heater LH
Buckle SW LH
J20(A), J21(B)
Junction
Connector
Door Unlock
Detection SW
Rear LH
BA1
B11
W- B
(*5)
(*6)
(*5 *24)
(*5 *25)
(*5 *26)
(*23)
(*6 *25)

# I GROUND POINT

## ○ : Parts Location

| Code | See Page | Code | | See Page | Code | | See Page |
|---|---|---|---|---|---|---|---|
| J1 | 41 | J18 | A | 44 (*3) | J21 | B | 44 (*3) |
| J2 | 41 | J19 | B | 44 (*3) | | | 45 (*4) |
| J4 | 41 | J20 | A | 44 (*3) | | | |
| J11 | 42 | | | 45 (*4) | | | |

## ▭ : Relay Blocks

| Code | See Page | Relay Blocks (Relay Block Location) |
|---|---|---|
| 1 | 22 | Engine Room R/B (Engine Compartment Left) |

## ▭ : Junction Block and Wire Harness Connector

| Code | See Page | Junction Block and Wire Harness (Connector Location) |
|---|---|---|
| 1C | 25 | Engine Room Main Wire and Engine Room J/B (Engine Compartment Left) |
| 1J | | |
| 1K | 25 | Engine Wire and Engine Room J/B (Engine Compartment Left) |
| 2B | 28 | Instrument Panel Wire and Driver Side J/B (Lower Finish Panel) |
| 2D | | |
| 2L | 29 | |
| 2M | | |
| 2P | | |
| 2R | | |
| 3A | 34 | Instrument Panel Wire and Passenger Side J/B (Instrument Panel Brace RH) |
| 3B | | |

## ▭ : Connector Joining Wire Harness and Wire Harness

| Code | See Page | Joining Wire Harness and Wire Harness (Connector Location) |
|---|---|---|
| EA1 | 46 (*1) | Engine Room Main Wire and Engine Room No.2 Wire (Radiator Side Support LH) |
| | 48 (*2) | |
| EA2 | 46 (*1) | |
| | 48 (*2) | |
| IA1 | 50 | Front Door LH Wire and Floor Wire (Left Kick Panel) |
| IE1 | 50 | Instrument Panel Wire and Roof Wire (Inside of Front Left Pillar) |
| IF4 | 50 | Engine Room Main Wire and Instrument Panel Wire (Right Side of Steering Column Tube) |
| IG1 | 50 | Instrument Panel Wire and Engine Room Main Wire (Instrument Panel Brace LH) |
| IH2 | 50 | Instrument Panel Wire and Instrument Panel No.2 Wire (Instrument Panel Brace RH) |
| IH3 | | |
| II1 | 52 | Instrument Panel Wire and Instrument Panel No.3 Wire (Behind the Glove Box) |
| II3 | | |
| IL1 | 52 | Engine Wire and Instrument Panel Wire (Behind the Glove Box) |
| IL2 | | |
| IM1 | 52 | Front Door RH Wire and Instrument Panel Wire (Right Kick Panel) |
| BA1 | 54 | Rear Door LH Wire and Floor Wire (Left Center Pillar) |
| BB1 | 54 | Rear Door RH Wire and Floor No.2 Wire (Right Center Pillar) |

* 1 : 1MZ-FE, 3MZ-FE * 2 : 2AZ-FE * 3 : w/ Power Seat * 4 : w/o Power Seat

## ▽ : Ground Points

| Code | See Page | Ground Points Location |
|---|---|---|
| EA | 46 (*1) | Right Fender |
| | 48 (*2) | |
| EB | 46 (*1) | |
| | 48 (*2) | |
| EC | 46 (*1) | Left Fender |
| | 48 (*2) | |
| ED | 46 (*1) | |
| | 48 (*2) | |
| EE | 46 (*1) | Left Side of Cylinder Head |
| EF | 46 (*1) | Right Side of Cylinder Head |
| EG | 48 (*2) | Left Side of Cylinder Head |
| EH | 48 (*2) | Intake Side of Cylinder Block |
| II | 50 | Cowl Side Panel LH |
| IJ | 50 | Instrument Panel Brace LH |
| IK | | |
| IL | 50 | Instrument Panel Brace RH |
| IM | 50 | Instrument Panel Reinforcement RH |
| IN | | |
| BO | 54 | Under the Driver's Seat |
| BP | 54 | Under the Front Passenger's Seat |
| BQ | 54 | Front Side of Rear Quarter Wheel House LH |
| BR | 54 | Front Side of Rear Quarter Wheel House RH |
| BS | 54 | Lower Back Panel Center |

## ⬡ : Splice Points

| Code | See Page | Wire Harness with Splice Points | Code | See Page | Wire Harness with Splice Points |
|---|---|---|---|---|---|
| E1 | 46 (*1) | Engine Room Main Wire | I5 | 52 | Engine Wire |
| | 48 (*2) | | I6 | | |
| E2 | 46 (*1) | | B1 | 54 | Roof Wire |
| | 48 (*2) | | B4 | 54 | Front Door LH Wire |
| E3 | 46 (*1) | | B10 | 54 | Floor Wire |
| | 48 (*2) | | B11 | | |
| E4 | 46 (*1) | | B13 | 54 | Front Door RH Wire |
| | 48 (*2) | | B16 | 54 | Floor Wire |
| E6 | 46 (*1) | Engine Wire | B17 | | |
| E11 | 48 (*2) | | | | |

* 1 : 1MZ-FE, 3MZ-FE  * 2 : 2AZ-FE  * 3 : w/ Power Seat  * 4 : w/o Power Seat

# J POWER SOURCE (Current Flow Chart)

The chart below shows the route by which current flows from the battery to each electrical source (Fusible Link, Circuit Breaker, Fuse, etc.) and other Parts.

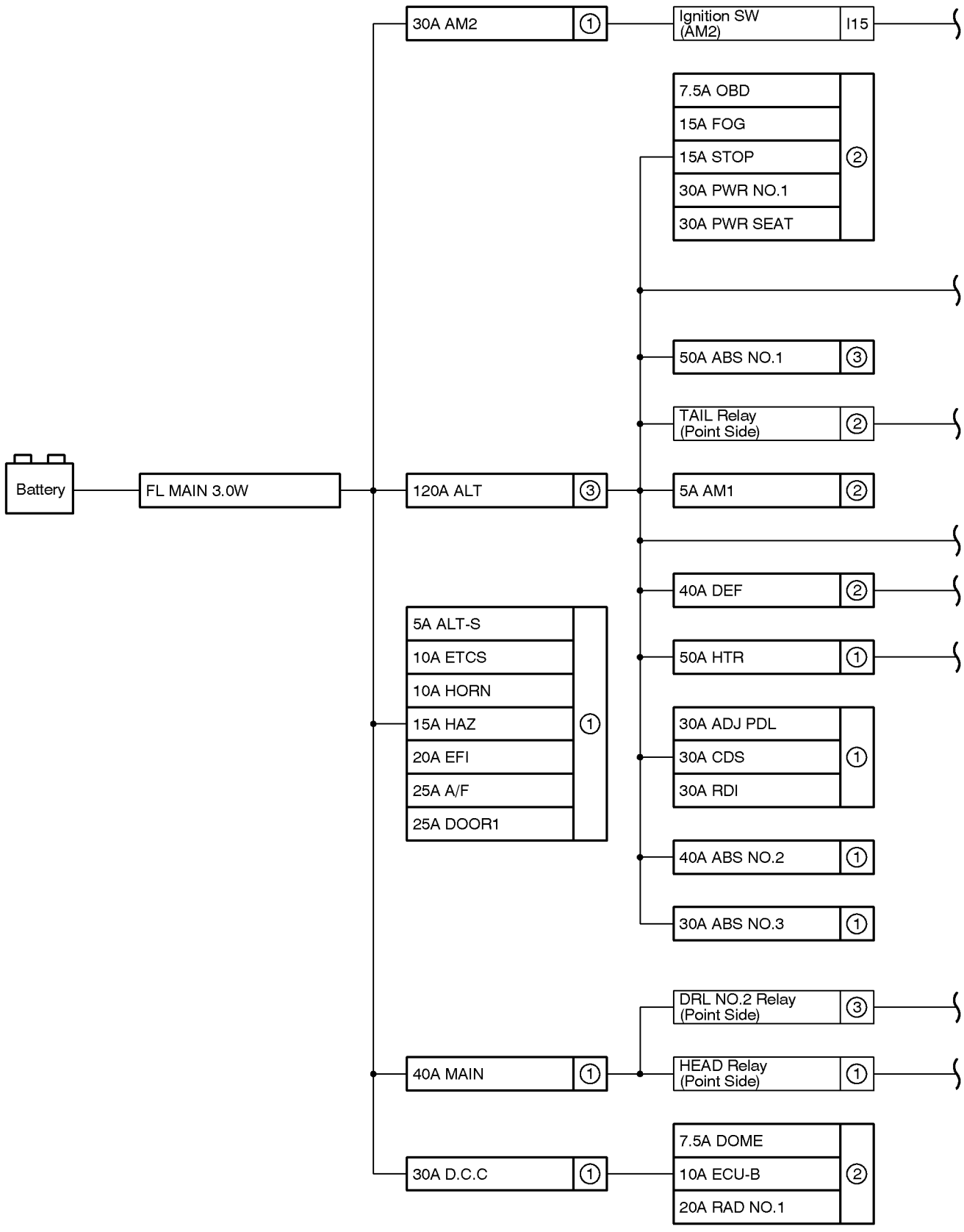

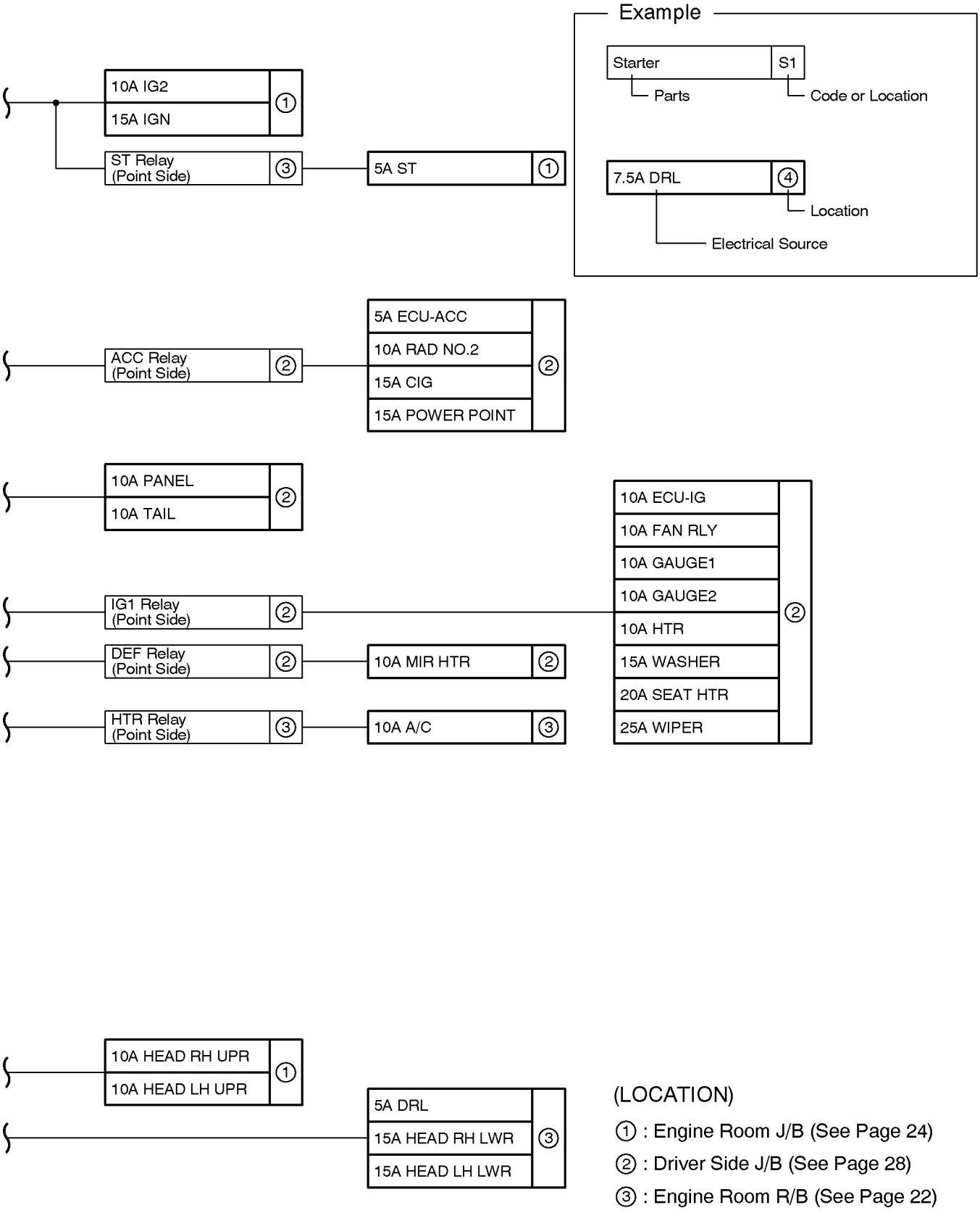


(LOCATION)

① : Engine Room J/B (See Page 24)

② : Driver Side J/B (See Page 28)

③ : Engine Room R/B (See Page 22)

## Engine Room J/B (See Page 24)

| Fuse | | System | Page |
|---|---|---|---|
| 5A | ALT-S | Charging | 72 |
| 5A | ST | Combination Meter | 260 |
| | | Starting and ignition (1MZ-FE, 3MZ-FE) | 64 |
| | | Starting and ignition (2AZ-FE) | 68 |
| 10A | ETCS | Cruise Control (1MZ-FE, 3MZ-FE) | 192 |
| | | Cruise Control (2AZ-FE) | 198 |
| | | Engine Control (1MZ-FE, 3MZ-FE) | 74 |
| | | Engine Control (2AZ-FE) | 86 |
| 10A | HEAD LH UPR | Headlight | 120 |
| | | Multiplex Communication System (BEAN) | 104 |
| 10A | HEAD RH UPR | Headlight | 120 |
| | | Multiplex Communication System (BEAN) | 104 |
| 10A | HORN | Horn | 236 |
| | | Multiplex Communication System (BEAN) | 104 |
| | | Theft Deterrent and Door Lock Control | 152 |
| 10A | IG2 | ABS (TMC Made) | 176 |
| | | ABS (TMMK Made) | 180 |
| | | Charging | 72 |
| | | Combination Meter | 260 |
| | | Cruise Control (1MZ-FE, 3MZ-FE) | 192 |
| | | Cruise Control (2AZ-FE) | 198 |
| | | Electronically Controlled Transmission and A/T Indicator (1MZ-FE, 3MZ-FE) | 204 |
| | | Electronically Controlled Transmission and A/T Indicator (2AZ-FE) | 210 |
| | | Engine Control (1MZ-FE, 3MZ-FE) | 74 |
| | | Engine Control (2AZ-FE) | 86 |
| | | Seat Belt Warning | 224 |
| | | SRS | 185 |
| | | VSC | 170 |
| 15A | HAZ | Turn Signal and Hazard Warning Light | 142 |
| 15A | IGN | Clock | 246 |
| | | Engine Control (1MZ-FE, 3MZ-FE) | 74 |
| | | Engine Control (2AZ-FE) | 86 |
| | | Engine Immobilizer System | 100 |
| | | Starting and ignition (1MZ-FE, 3MZ-FE) | 64 |
| | | Starting and ignition (2AZ-FE) | 68 |
| 20A | EFI | Cruise Control (1MZ-FE, 3MZ-FE) | 192 |
| | | Cruise Control (2AZ-FE) | 198 |
| | | Electronically Controlled Transmission and A/T Indicator (1MZ-FE, 3MZ-FE) | 204 |
| | | Electronically Controlled Transmission and A/T Indicator (2AZ-FE) | 210 |
| | | Engine Control (1MZ-FE, 3MZ-FE) | 74 |
| | | Engine Control (2AZ-FE) | 86 |

* These are the page numbers of the first page on which the related system is shown.

| Fuse | | System | Page |
|---|---|---|---|
| 25A | A/F | Engine Control (1MZ-FE, 3MZ-FE) | 74 |
| 25A | DOOR1 | Multiplex Communication System (BEAN) | 104 |
| | | Theft Deterrent and Door Lock Control | 152 |
| | | Wireless Door Lock Control | 158 |
| 30A | ABS NO.3 | ABS (TMMK Made) | 180 |
| | | VSC | 170 |
| 30A | ADJ PDL | Power Adjustable Pedals | 244 |
| 30A | AM2 | Charging | 72 |
| | | Engine Control (1MZ-FE, 3MZ-FE) | 74 |
| | | Engine Control (2AZ-FE) | 86 |
| | | Starting and ignition (1MZ-FE, 3MZ-FE) | 64 |
| | | Starting and ignition (2AZ-FE) | 68 |
| 30A | CDS | Radiator Fan and Condenser Fan | 266 |
| 30A | RDI | Radiator Fan and Condenser Fan | 266 |
| 40A | ABS NO.2 | ABS (TMC Made) | 176 |
| 40A | MAIN | Automatic Light Control | 128 |
| | | Headlight | 120 |
| | | Light Auto Turn Off System | 130 |
| | | Multiplex Communication System (BEAN) | 104 |
| 50A | HTR | Automatic Air Conditioning (1MZ-FE) | 272 |
| | | Automatic Air Conditioning (2AZ-FE) | 278 |
| | | Manual Air Conditioning (1MZ-FE, 3MZ-FE) | 284 |
| | | Manual Air Conditioning (2AZ-FE) | 290 |

## Driver Side J/B (See Page 28)

| Fuse | | System | Page |
|---|---|---|---|
| 5A | AM1 | Electronically Controlled Transmission and A/T Indicator (1MZ-FE, 3MZ-FE) | 204 |
| | | Electronically Controlled Transmission and A/T Indicator (2AZ-FE) | 210 |
| | | Engine Control (1MZ-FE, 3MZ-FE) | 74 |
| | | Engine Control (2AZ-FE) | 86 |
| | | Starting and ignition (1MZ-FE, 3MZ-FE) | 64 |
| | | Starting and ignition (2AZ-FE) | 68 |
| 5A | ECU-ACC | Clock | 246 |
| | | Combination Meter | 260 |
| | | Multiplex Communication System (BEAN) | 104 |
| | | Remote Control Mirror | 228 |
| 7.5A | DOME | Clock | 246 |
| | | Garage Door Opener | 232 |
| | | Interior Light | 134 |
| | | Multiplex Communication System (BEAN) | 104 |
| | | Wireless Door Lock Control | 158 |
| 7.5A | OBD | Engine Control (1MZ-FE, 3MZ-FE) | 74 |
| | | Engine Control (2AZ-FE) | 86 |

* These are the page numbers of the first page on which the related system is shown.

# J POWER SOURCE (Current Flow Chart)

| Fuse | | System | Page |
|---|---|---|---|
| 10A | ECU-B | ABS (TMC Made) | 176 |
| | | ABS (TMMK Made) | 180 |
| | | Automatic Air Conditioning (1MZ-FE) | 272 |
| | | Automatic Air Conditioning (2AZ-FE) | 278 |
| | | Automatic Light Control | 128 |
| | | Clock | 246 |
| | | Combination Meter | 260 |
| | | Cruise Control (1MZ-FE, 3MZ-FE) | 192 |
| | | Cruise Control (2AZ-FE) | 198 |
| | | Electronically Controlled Transmission and A/T Indicator (1MZ-FE, 3MZ-FE) | 204 |
| | | Electronically Controlled Transmission and A/T Indicator (2AZ-FE) | 210 |
| | | Engine Control (1MZ-FE, 3MZ-FE) | 74 |
| | | Engine Control (2AZ-FE) | 86 |
| | | Engine Immobilizer System | 100 |
| | | Headlight | 120 |
| | | Illumination | 138 |
| | | Interior Light | 134 |
| | | Key Reminder | 150 |
| | | Light Auto Turn Off System | 130 |
| | | Manual Air Conditioning (1MZ-FE, 3MZ-FE) | 284 |
| | | Manual Air Conditioning (2AZ-FE) | 290 |
| | | Moon Roof | 164 |
| | | Multiplex Communication System (BEAN) | 104 |
| | | Navigation System, Audio System | 250 |
| | | Power Window | 166 |
| | | Seat Belt Warning | 224 |
| | | SRS | 185 |
| | | Theft Deterrent and Door Lock Control | 152 |
| | | VSC | 170 |
| | | Wireless Door Lock Control | 158 |
| 10A | ECU-IG | ABS (TMC Made) | 176 |
| | | ABS (TMMK Made) | 180 |
| | | Automatic Light Control | 128 |
| | | Headlight | 120 |
| | | Interior Light | 134 |
| | | Key Reminder | 150 |
| | | Light Auto Turn Off System | 130 |
| | | Moon Roof | 164 |
| | | Multiplex Communication System (BEAN) | 104 |
| | | Power Window | 166 |
| | | Theft Deterrent and Door Lock Control | 152 |
| | | VSC | 170 |
| 10A | FAN RLY | Radiator Fan and Condenser Fan | 266 |

* These are the page numbers of the first page on which the related system is shown.

| Fuse | | System | Page |
|---|---|---|---|
| 10A | GAUGE1 | Charging | 72 |
| | | Clock | 246 |
| | | Combination Meter | 260 |
| | | Cruise Control (1MZ-FE, 3MZ-FE) | 192 |
| | | Cruise Control (2AZ-FE) | 198 |
| | | Electronically Controlled Transmission and A/T Indicator (1MZ-FE, 3MZ-FE) | 204 |
| | | Electronically Controlled Transmission and A/T Indicator (2AZ-FE) | 210 |
| | | Engine Control (1MZ-FE, 3MZ-FE) | 74 |
| | | Engine Control (2AZ-FE) | 86 |
| | | Illumination | 138 |
| | | Key Reminder | 150 |
| | | Multiplex Communication System (BEAN) | 104 |
| | | Navigation System, Audio System | 250 |
| | | Seat Belt Warning | 224 |
| | | Shift Lock | 216 |
| | | SRS | 185 |
| | | Turn Signal and Hazard Warning Light | 142 |
| 10A | GAUGE2 | ABS (TMC Made) | 176 |
| | | ABS (TMMK Made) | 180 |
| | | Automatic Glare-Resistant EC Mirror | 230 |
| | | Back-Up Light | 148 |
| | | Cruise Control (1MZ-FE, 3MZ-FE) | 192 |
| | | Cruise Control (2AZ-FE) | 198 |
| | | Electronically Controlled Transmission and A/T Indicator (1MZ-FE, 3MZ-FE) | 204 |
| | | Electronically Controlled Transmission and A/T Indicator (2AZ-FE) | 210 |
| | | Moon Roof | 164 |
| | | Multiplex Communication System (BEAN) | 104 |
| | | Navigation System, Audio System | 250 |
| | | Power Adjustable Pedals | 244 |
| | | Rear Window Defogger and Mirror Heater | 242 |
| | | VSC | 170 |
| 10A | HTR | Automatic Air Conditioning (1MZ-FE) | 272 |
| | | Automatic Air Conditioning (2AZ-FE) | 278 |
| | | Manual Air Conditioning (1MZ-FE, 3MZ-FE) | 284 |
| | | Manual Air Conditioning (2AZ-FE) | 290 |
| 10A | MIR HTR | Engine Control (1MZ-FE, 3MZ-FE) | 74 |
| | | Engine Control (2AZ-FE) | 86 |
| | | Rear Window Defogger and Mirror Heater | 242 |
| 10A | PANEL | Clock | 246 |
| | | Illumination | 138 |
| 10A | RAD NO.2 | Audio System (Built-In Type Amplifier w/o Navigation System) | 258 |
| | | Audio System (Separate Type Amplifier w/o Navigation System) | 254 |
| | | Navigation System, Audio System | 250 |

* These are the page numbers of the first page on which the related system is shown.

## J POWER SOURCE (Current Flow Chart)

| Fuse | | System | Page |
|---|---|---|---|
| 10A | TAIL | Engine Control (1MZ-FE, 3MZ-FE) | 74 |
| | | Engine Control (2AZ-FE) | 86 |
| | | Taillight | 144 |
| 15A | CIG | Power Outlet and Cigarette Lighter | 234 |
| 15A | FOG | Fog Light | 126 |
| 15A | POWER POINT | Power Outlet and Cigarette Lighter | 234 |
| 15A | STOP | ABS (TMC Made) | 176 |
| | | ABS (TMMK Made) | 180 |
| | | Cruise Control (1MZ-FE, 3MZ-FE) | 192 |
| | | Cruise Control (2AZ-FE) | 198 |
| | | Electronically Controlled Transmission and A/T Indicator (1MZ-FE, 3MZ-FE) | 204 |
| | | Electronically Controlled Transmission and A/T Indicator (2AZ-FE) | 210 |
| | | Engine Control (1MZ-FE, 3MZ-FE) | 74 |
| | | Engine Control (2AZ-FE) | 86 |
| | | Shift Lock | 216 |
| | | Stop Light | 146 |
| | | VSC | 170 |
| 15A | WASHER | Wiper and Washer | 238 |
| 20A | RAD NO.1 | Audio System (Built-In Type Amplifier w/o Navigation System) | 258 |
| | | Audio System (Separate Type Amplifier w/o Navigation System) | 254 |
| | | Navigation System, Audio System | 250 |
| 20A | SEAT HTR | Seat Heater | 222 |
| 25A | WIPER | Wiper and Washer | 238 |
| 30A | PWR NO.1 | Moon Roof | 164 |
| | | Multiplex Communication System (BEAN) | 104 |
| | | Power Window | 166 |
| 30A | PWR SEAT | Power Seat | 218 |
| 40A | DEF | Rear Window Defogger and Mirror Heater | 242 |

## Engine Room R/B (See Page 22)

| Fuse | | System | Page |
|---|---|---|---|
| 5A | DRL | Headlight | 120 |
| | | Multiplex Communication System (BEAN) | 104 |
| 10A | A/C | Manual Air Conditioning (1MZ-FE, 3MZ-FE) | 284 |
| | | Manual Air Conditioning (2AZ-FE) | 290 |
| 15A | HEAD LH LWR | Combination Meter | 260 |
| | | Fog Light | 126 |
| | | Headlight | 120 |
| | | Multiplex Communication System (BEAN) | 104 |
| 15A | HEAD RH LWR | Headlight | 120 |
| | | Multiplex Communication System (BEAN) | 104 |

* These are the page numbers of the first page on which the related system is shown.

| Fuse | | System | Page |
|---|---|---|---|
| 50A | ABS NO.1 | ABS (TMC Made) | 176 |
| | | ABS (TMMK Made) | 180 |
| | | VSC | 170 |
| 120A | ALT | Automatic Light Control | 128 |
| | | Charging | 72 |
| | | Electronically Controlled Transmission and A/T Indicator (1MZ-FE, 3MZ-FE) | 204 |
| | | Electronically Controlled Transmission and A/T Indicator (2AZ-FE) | 210 |
| | | Engine Control (1MZ-FE, 3MZ-FE) | 74 |
| | | Engine Control (2AZ-FE) | 86 |
| | | Illumination | 138 |
| | | Light Auto Turn Off System | 130 |
| | | Multiplex Communication System (BEAN) | 104 |
| | | Starting and ignition (1MZ-FE, 3MZ-FE) | 64 |
| | | Starting and ignition (2AZ-FE) | 68 |
| | | Taillight | 144 |

* These are the page numbers of the first page on which the related system is shown.

# K CONNECTOR LIST

**A 1**
Black




**A 2**
Gray

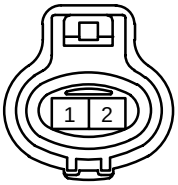


**A 3**
Gray




**A 4**
Gray

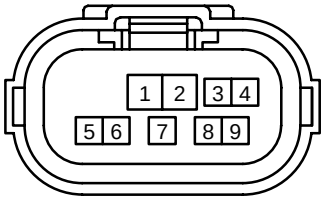


**A 6**
Gray




**A 7**




**A 8**
Dark Gray




**A 9**
Dark Gray




**A10**
Dark Gray




**A11**
Yellow

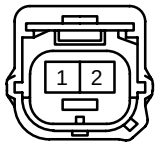


**A12**
Yellow

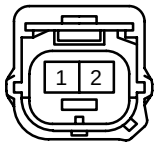


**A13**

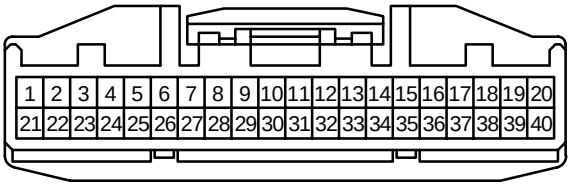


**A14**
Black

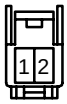


**A15**
Black

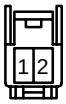


**A16**




**A18**
Black




**A19**

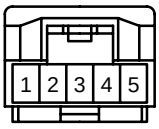


**A20**

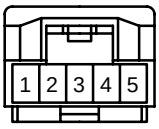


**A21**
(Automatic A/C)

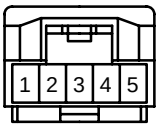


**A21**
(Manual A/C)

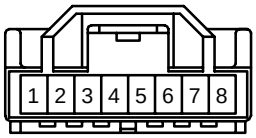


**A22**
Yellow

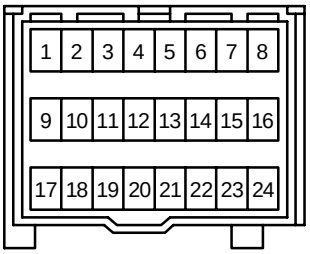


**A23**
Yellow

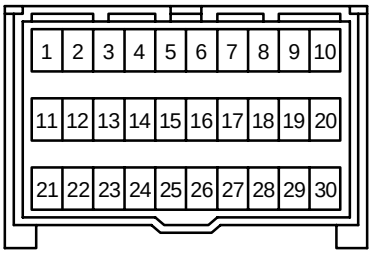


**A24**
Yellow

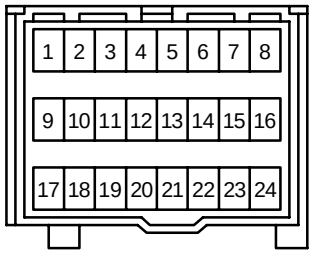


**A27**
Yellow

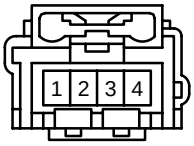


**A28**
Black

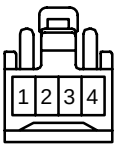


**A32**
Gray




**A33**
Gray




**A34**

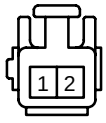


**A35**
(TMC Made) Black

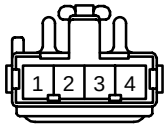

**A35**
(TMMK Made)

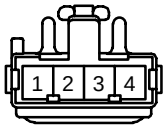


**A36**

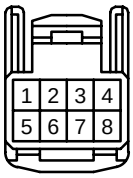


**A37**
Yellow

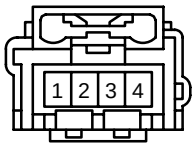


**A38**

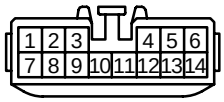


**A39**

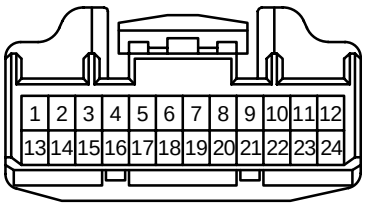


**A40**

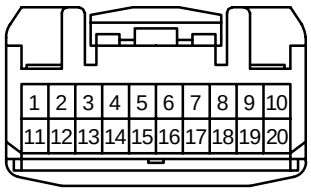


**B 1**
Gray




**B 2**
Gray




**B 3**

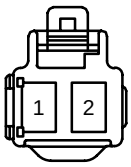


**B 4**
Black

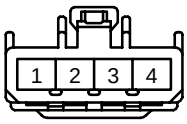


**B 5**
Black

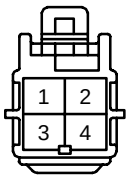


**B 6**

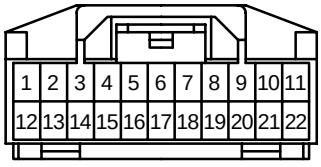


**B 7**

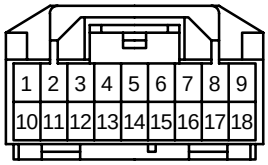


**B 8**

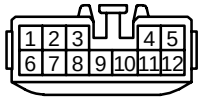


**B 9**

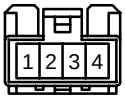


**B10**
(TMC Made)

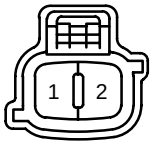


**B10**
(TMMK Made)




**B11**
(TMC Made)




**B11**
(TMMK Made) Gray




**C 1**
Black




**C 2**
Black

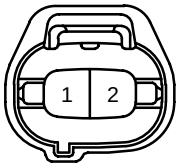


**C 3**
(1MZ-FE, 3MZ-FE) Black




**C 3**
(2AZ-FE) Dark Gray




**C 4**

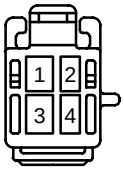


**C 5**
(Automatic A/C)

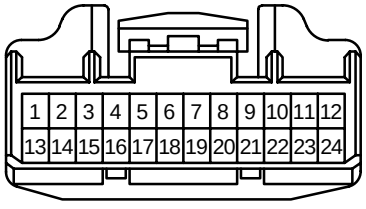


**C 5**
(Manual A/C)

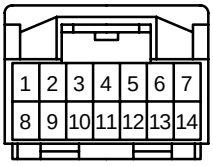

# K CONNECTOR LIST

**C 6**
Black

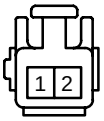


**C 7**

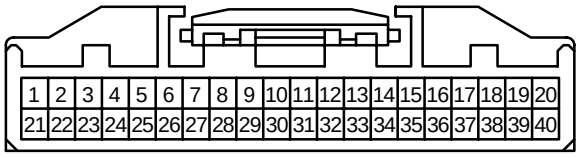


**C 8**

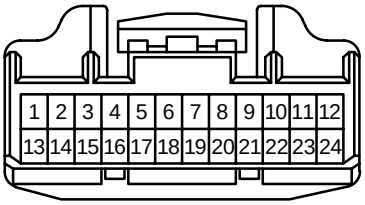


**C 9**
Black

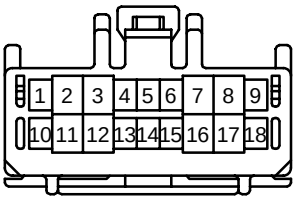


**C10**
Black

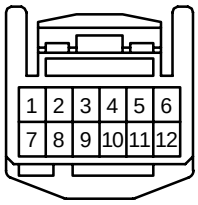


**C11**

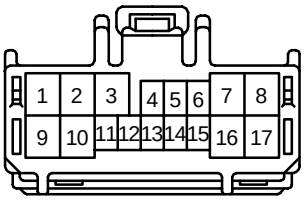


**C12**

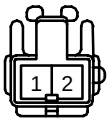


**C13**




**C14**
Yellow

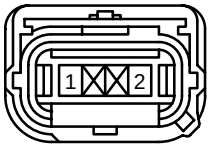


**C15**
Yellow

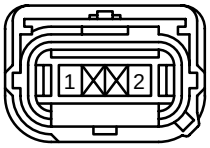


**C16**
(TMC Made) Black

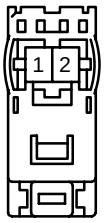


**C16**
(TMMK Made) Yellow

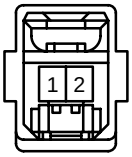


**C17**
(TMC Made) Black

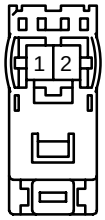


**C17**
(TMMK Made) Yellow

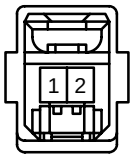


**D 1**
Gray

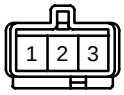


**D 2**
Black




**D 3**

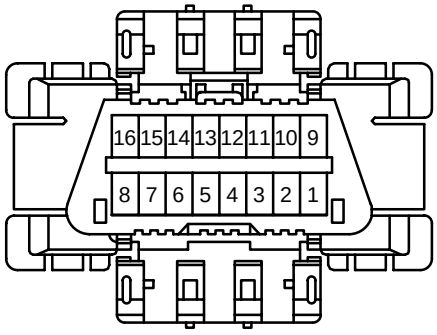


**D 4**
Black




**D 5**

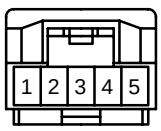


**D 6**
(TMC Made) Black




**D 6**
(TMMK Made)




**D 7**
(TMC Made) Black




**D 7**
(TMMK Made)




**D 8**
(TMC Made) Black




**D 8**
(TMMK Made)




**D 9**
(TMC Made) Black




**D 9**
(TMMK Made)




**D10**

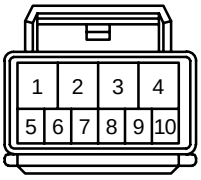


**D11**

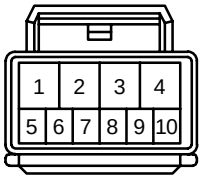

**D12**

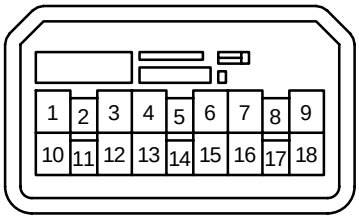


**D13**
(TMC Made)




**D13**
(TMMK Made) Black




**D14**

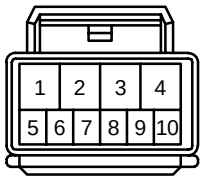


**D15**

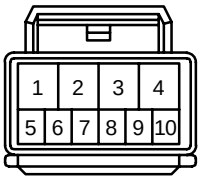


**D16**
Gray

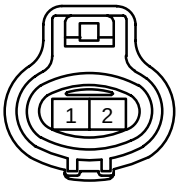


**E 3**
Gray

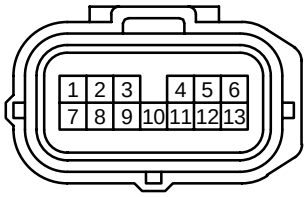


**E 4**
(1MZ-FE, 3MZ-FE) Dark Gray




**E 4**
(2AZ-FE) Black




**E 5**
Black




**E 6**

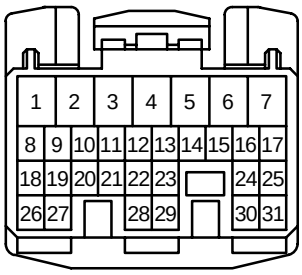


**E 7**

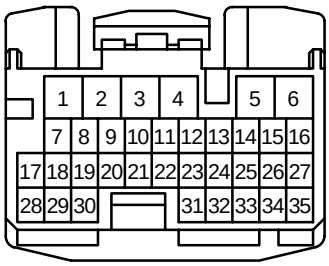


**E 8**

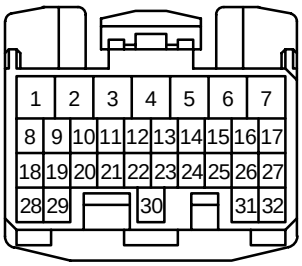


**E 9**

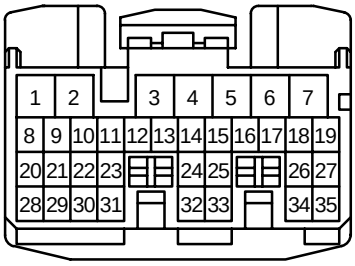


**E10**

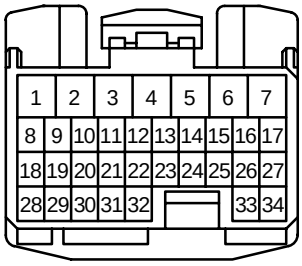


**F 1**
Brown




**F 2**
Brown




**F 5**
(TMC Made) Gray

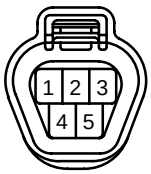


**F 5**
(TMMK Made) Black




**F 6**
(TMC Made)




**F 6**
(TMMK Made)




**F 7**
(TMC Made)




**F 7**
(TMMK Made)




**F 8**




**F 9**
Gray




**F10**
Gray




**F11**
(TMC Made) Black

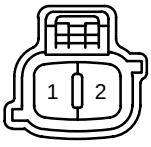


**F11**
(TMMK Made) Black



# K CONNECTOR LIST

*1 : w/ Rear Spoiler
*2 : w/o Rear Spoiler
*3 : 2AZ-FE California TMC Made
*4 : 2AZ-FE California TMMK Made

**F12**
(TMC Made) Black

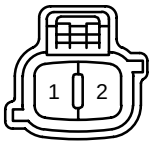


**F12**
(TMMK Made) Black




**G 1**

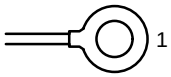


**G 2**
Black




**G 3**
Black




**G 4**

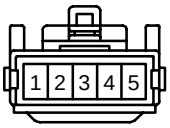


**H 1**
Black




**H 2**
Brown




**H 3**
Black




**H 4**
Brown




**H 6**
(1MZ-FE, 3MZ-FE) Dark Gray




**H 6**
(2AZ-FE)




**H 7**
Black




**H 8**
Black




**H 9**
Black




**H10**

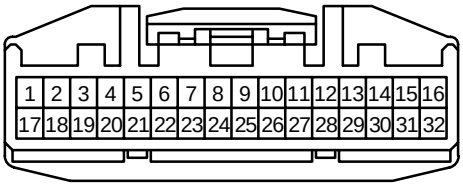


**H11**

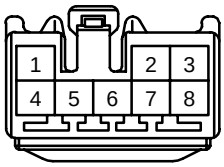


**H12**
(*1)




**H12**
(*2) Gray




**H13**
(*3) Dark Gray

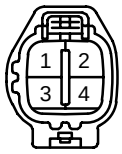


**H13**
(*4) Black




**I 1**
Black

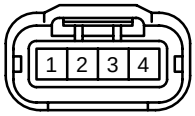


**I 2**
Black

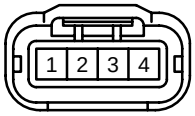


**I 3**
Black

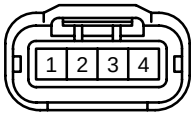


**I 4**
Black

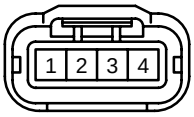


**I 5**
Black

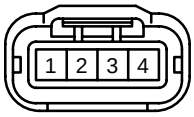


**I 6**
Black

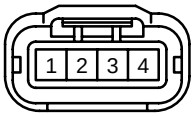


**I 7**
(1MZ-FE, 3MZ-FE) Gray




**I 7**
(2AZ-FE) Gray

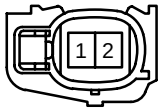


**I 8**
(1MZ-FE, 3MZ-FE) Gray




**I 8**
(2AZ-FE) Gray

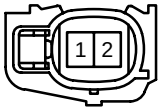


**I 9**
(1MZ-FE, 3MZ-FE) Gray




**I 9**
(2AZ-FE) Gray

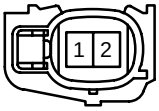


**I10**
(1MZ-FE, 3MZ-FE) Gray




**I10**
(2AZ-FE) Gray

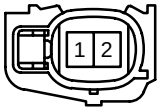

**I11**
Gray




**I12**
Gray




**I13**
Gray




**I14**
Black

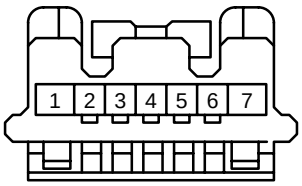


**I15**

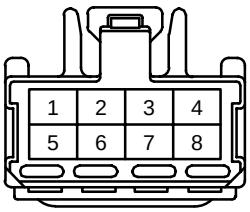


**I16**
Black

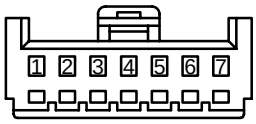


**I17**
(TMC Made)

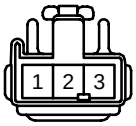


**I17**
(TMMK Made) Gray




**I18**
Black




**J 1**
(1MZ-FE, 3MZ-FE) Dark Gray

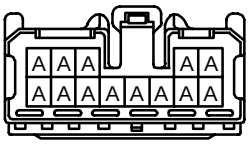


**J 1**
(2AZ-FE) Dark Gray

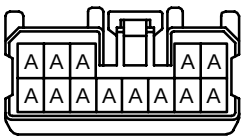


**J 2**

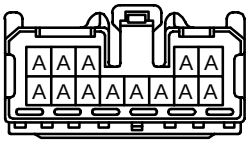


**J 4**

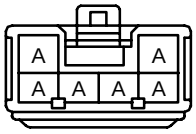


**J 5**
Black

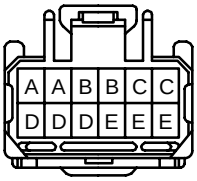


**J 6**
Black

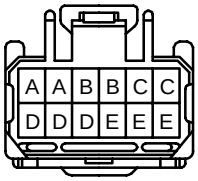


**J 7**

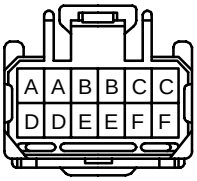


**J 8**

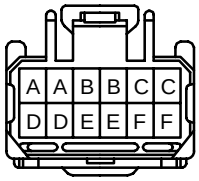


**J11**

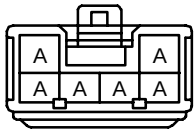


**J12**

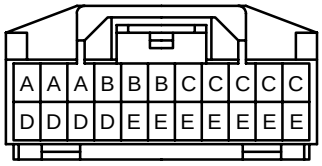


**J13**

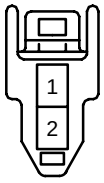


**J14**

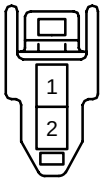


**J15**

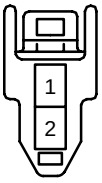


**J16**

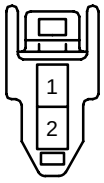


**J17**

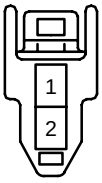


**J18**
(TMC Made) Gray

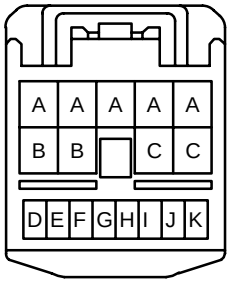


**J18**
(TMMK Made)

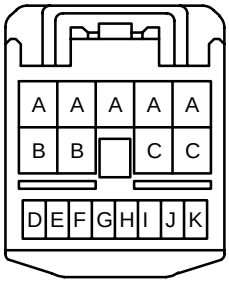


**J19**
(TMC Made) Gray

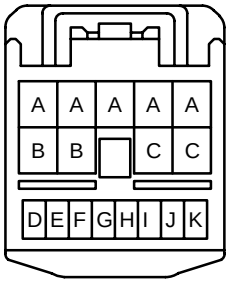


**J19**
(TMMK Made)

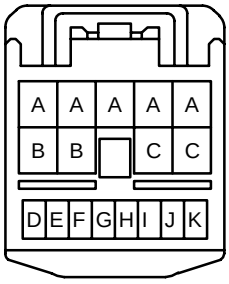

# K CONNECTOR LIST

*5 : TMC Made w/ Mirror Heater
*6 : TMC Made w/o Mirror Heater

**J20**
Gray

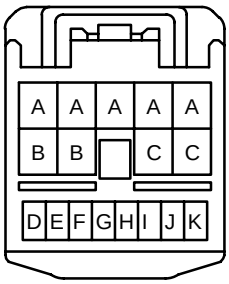


**J21**
(TMC Made) Gray

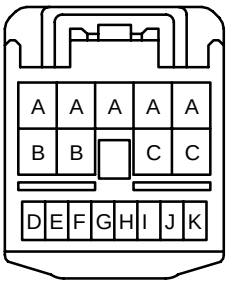


**J21**
(TMMK Made)

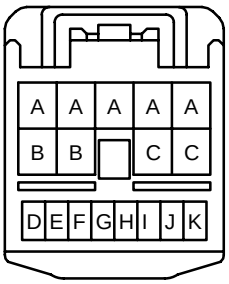


**J22**

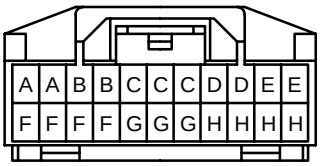


**J23**

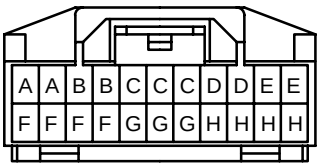


**K 1**
Black




**K 2**
Black

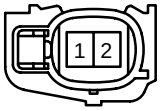


**K 3**
(1MZ-FE) Dark Gray




**K 3**
(3MZ-FE) Gray

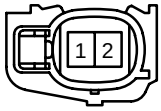


**K 4**
(1MZ-FE) Dark Gray




**K 4**
(3MZ-FE) Gray

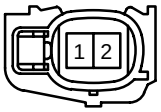


**L 1**
Gray




**L 2**
Gray




**L 3**




**L 4**
Black

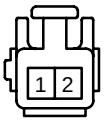


**L 5**




**M 1**
Black

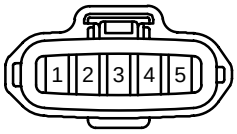


**M 2**
(*5)

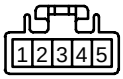


**M 2**
(*6)




**M 2**
(TMMK Made)

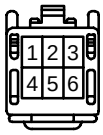


**M 3**
(*5)

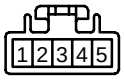


**M 3**
(*6)




**M 3**
(TMMK Made)

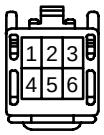


**M 4**
(TMC Made)

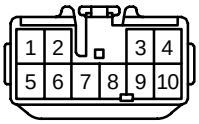


**M 4**
(TMMK Made)

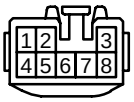


**N 1**
Gray




**N 4**

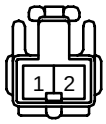


**O 1**
Gray




**O 3**
Gray

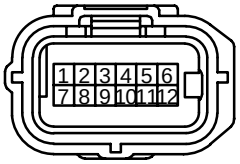


**O 4**
Black

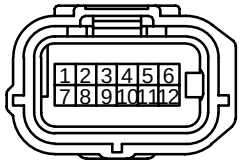


**O 5**
Gray

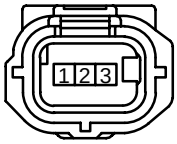

*7 : w/ Power Adjustable Pedals
*8 : w/o Power Adjustable Pedals

**O 6**
Black

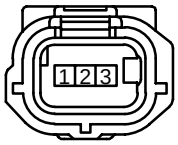


**O 7**
Black

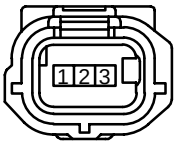


**O 8**
Black

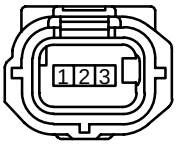


**O 9**
Gray

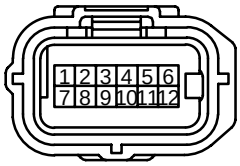


**O10**
Black

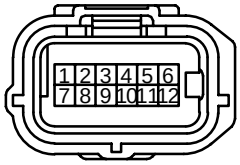


**O11**
Gray

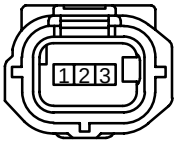


**O12**
Black

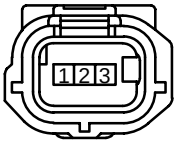


**O13**
Black

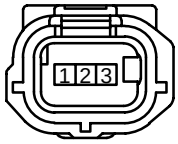


**O14**
Black

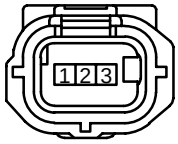


**P 1**
Black




**P 2**
Gray

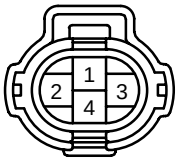


**P 3**
(*7) Blue

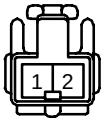


**P 3**
(*8)




**P 4**




**P 5**

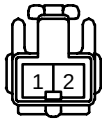


**P 6**
(TMC Made)

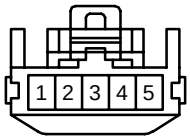


**P 6**
(TMMK Made)

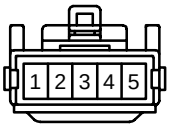


**P 7**
(TMC Made) Black

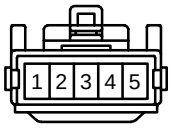


**P 7**
(TMMK Made)

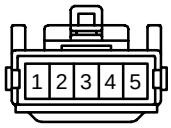


**P 8**
(TMC Made)

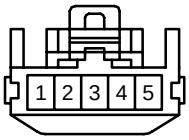


**P 8**
(TMMK Made)

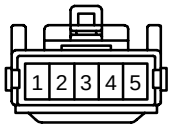


**P 9**
(TMC Made) Black




**P 9**
(TMMK Made) Black

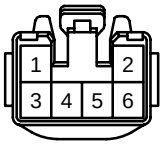


**P10**
(TMC Made) Black




**P10**
(TMMK Made) Black




**P11**
Black




**P12**
Black

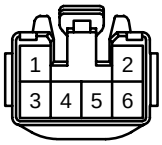


**P13**
Yellow

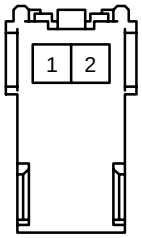


**P14**
Yellow

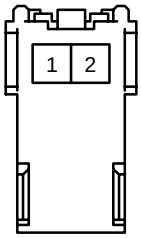


**P15**
Black

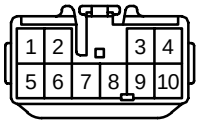


**P16**
Black

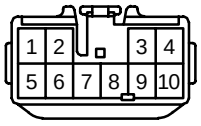


**P17**
Black

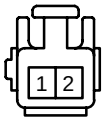


**P18**
Black

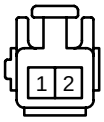


**P19**
Black

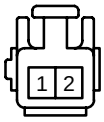


**P20**
Black

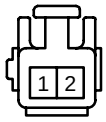


**P22**
Black

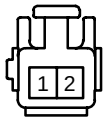

# K CONNECTOR LIST

*9 : TMC Made w/o VSC

**P23**
Black

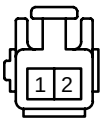


**P24**
Black

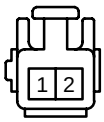


**P25**
Black

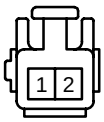


**P28**
(TMC Made)

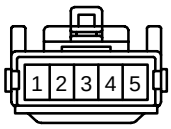


**P28**
(TMMK Made)

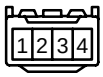


**P29**

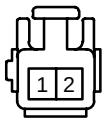


**R 1**
Gray

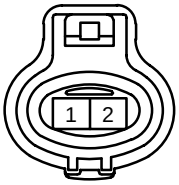


**R 2**

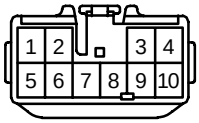


**R 3**
Blue




**R 4**

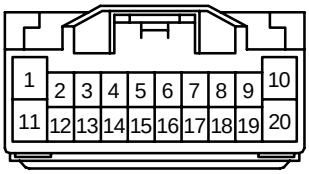


**R 5**
Black

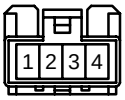


**R 6**

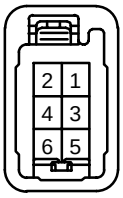


**R 7**

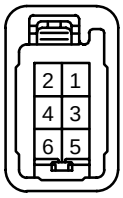


**R 8**

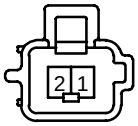


**R 9**

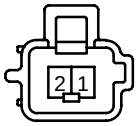


**R10**
(TMC Made)

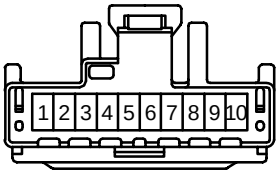


**R10**
(TMMK Made) Black

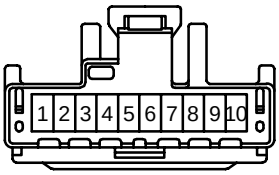


**R12**
Gray

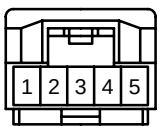


**R13**

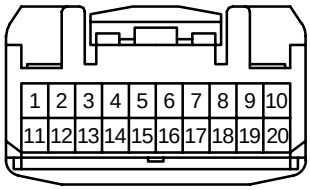


**S 1**
(*9) Black

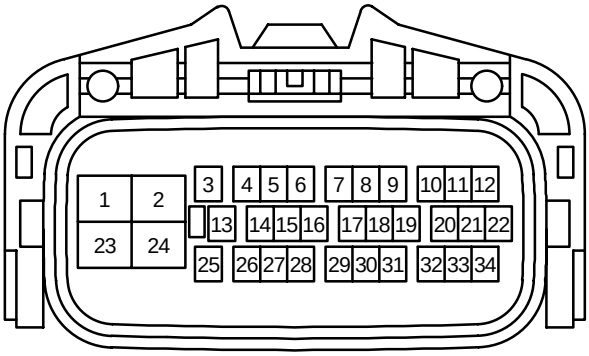

*10 : TMMK Made w/o VSC

**S 1**
(*10) Black

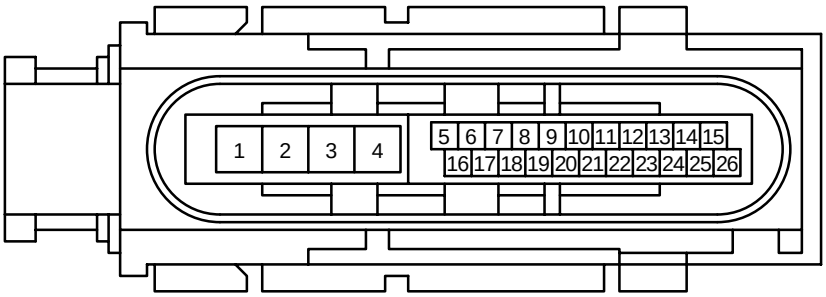


**S 1**
(w/ VSC) Black

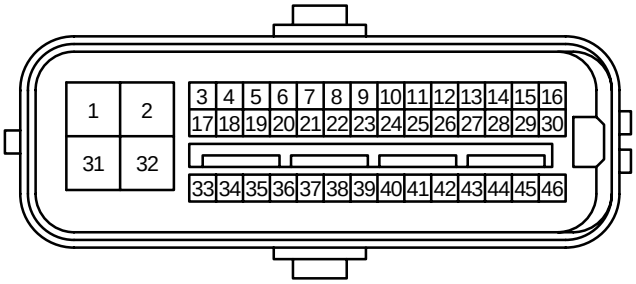


**S 2**
Black




**S 3**

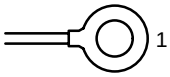


**S 4**
Black

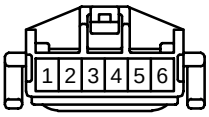


**S 5**
Blue

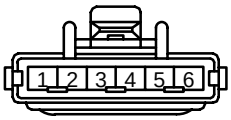


**S 6**

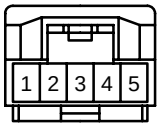


**S11**
Gray

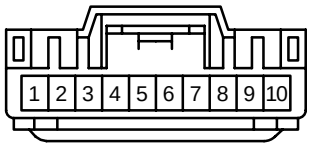


**S12**

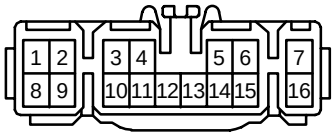


**S13**

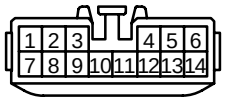


**S14**
Blue

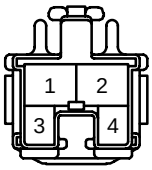


**S15**
Yellow

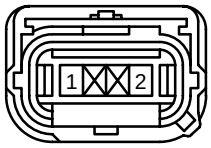


**S16**
Yellow

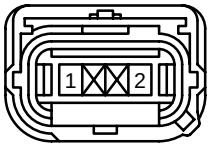


**S17**

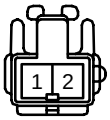


**S18**




**S19**
Yellow




**S20**
Yellow




**T 1**
Black




**T 4**
Black

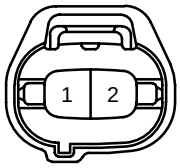


**T 5**

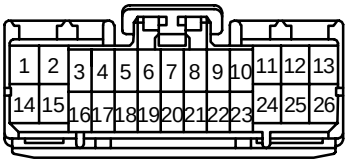


**T 6**
(TMC Made)

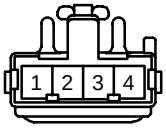


**T 6**
(TMMK Made) Black

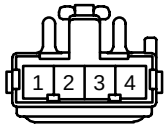

# K CONNECTOR LIST

*11 : TMMK Made Except 2AZ-FE California
*12 : TMMK Made 2AZ-FE California, TMC Made

**T 7**
Black




**T 9**

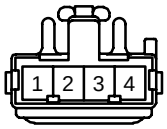


**T10**

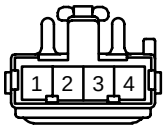


**T11**

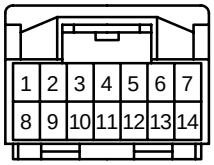


**T12**
Black

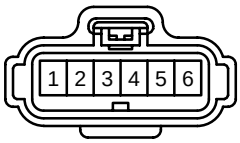


**U 1**

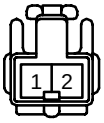


**V 3**
Blue

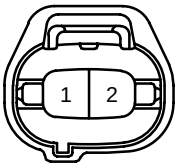


**V 4**
(*11) Blue




**V 4**
(*12) Black




**V 6**
(1MZ-FE, 3MZ-FE) Blue

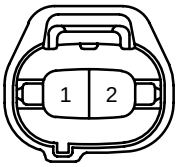


**V 6**
(2AZ-FE) Black

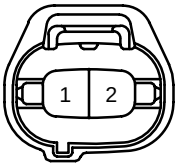


**V 7**
Black




**V 8**
Black

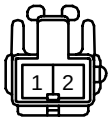


**V 9**
(TMC Made) Blue




**V 9**
(TMMK Made)




**V10**
(TMC Made) Blue




**V10**
(TMMK Made)




**V11**
(TMC Made) Black




**V11**
(TMMK Made) Black

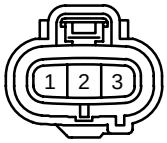


**V13**
Brown

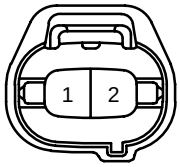


**V14**
Brown

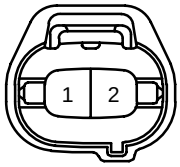


**V15**
Blue

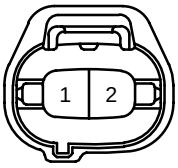


**V16**
Black




**V17**
Black




**V18**
Black




**V19**
Black




**W 1**
Black

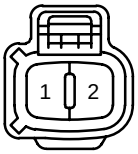


**W 2**
Black

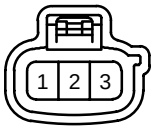


**W 3**
Gray




**W 4**
Gray




**Y 1**
Black

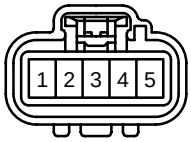


**Z 1**

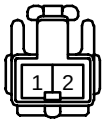

# L PART NUMBER OF CONNECTORS

| Code | Part Name | Part Number |
|---|---|---|
| A 1 | A/C Ambient Temp. Sensor | 90980-11070 |
| A 2 | A/C Condenser Fan Motor | 90980-10928 |
| A 3 | A/C Lock Sensor | 90980-11016 |
| | A/C Magnetic Clutch | |
| A 4 | A/T Indicator Light SW | 90980-12362 |
| | Back-Up Light SW | |
| | Park/Neutral Position SW | |
| A 6 | ABS Speed Sensor Front LH | 90980-11002 |
| A 7 | ABS Speed Sensor Front RH | |
| A 8 | Air Fuel Ratio Sensor (Bank 1 Sensor 1) | 90980-11178 |
| A 9 | Air Fuel Ratio Sensor (Bank 1 Sensor 1) | |
| A10 | Air Fuel Ratio Sensor (Bank 2 Sensor 1) | |
| A11 | Airbag Sensor Front LH | 90980-11856 |
| A12 | Airbag Sensor Front RH | |
| A13 | A/C Control Assembly | 90980-12169 |
| A14 | A/C Room Temp. Sensor | 90980-11918 |
| A15 | A/C Solar Sensor | |
| A16 | A/C Thermistor | |
| A18 | Accelerator Position Sensor | 90980-11144 |
| A19 | Air Inlet Control Servo Motor | 90980-11909 |
| A20 | Air Mix Control Servo Motor | |
| A21 | Air Vent Mode Servo Motor (Automatic A/C) | 90980-11909 |
| | Air Vent Mode Servo Motor (Manual A/C) | 90980-11989 |
| A22 | Airbag Sensor Assembly | 90980-12392 |
| A23 | Airbag Sensor Assembly | 90980-12391 |
| A24 | Airbag Sensor Assembly | 90980-12390 |
| A27 | Airbag Squib (Steering Wheel Pad) | 90980-12160 |
| A28 | Automatic Light Control Sensor | 90980-11107 |
| A32 | ABS Speed Sensor Rear LH | 90980-11060 |
| A33 | ABS Speed Sensor Rear RH | |
| A34 | Adjustable Pedal Motor | 90980-10825 |
| A35 | Adjustable Pedal SW | 90980-11090 |
| A36 | A/T Shift Lever Illumination | 90980-12221 |
| | Transmission Control SW | |
| A37 | Airbag Squib (Front Airbag Sensor Assembly) | 90980-12160 |
| A38 | A/C Amplifier | 90980-10807 |
| A39 | A/C Control Assembly | 90980-12200 |
| A40 | A/C Control Assembly | 90980-12259 |
| B 1 | Back-Up Light SW | 90980-11250 |
| B 2 | Brake Fluid Level Warning SW | 90980-11207 |
| B 3 | Blower Motor | 90980-10903 |
| B 4 | Blower Motor Controller | 90980-11676 |
| B 5 | Blower Resistor | 90980-11136 |
| B 6 | Body ECU | 90980-11915 |
| B 7 | Body ECU | 90980-11913 |

| Code | Part Name | Part Number |
|---|---|---|
| B 8 | Body ECU | 90980-10803 |
| B 9 | Buckle SW LH | 90980-11950 |
| B10 | Buckle SW (Front Passenger's Side) (TMC Made) | 90980-11019 |
| | Buckle SW (Front Passenger's Side) (TMMK Made) | 90980-10947 |
| B11 | Buckle SW LH (TMC Made) | 90980-10942 |
| | Buckle SW LH (TMMK Made) | 90980-11034 |
| | Seat Position Airbag Sensor (TMC Made) | 90980-10942 |
| | Seat Position Airbag Sensor (TMMK Made) | 90980-11034 |
| C 1 | Camshaft Position Sensor | 90980-10947 |
| C 2 | Counter Gear Speed Sensor | 90980-11156 |
| C 3 | Crankshaft Position Sensor | 90980-10947 |
| C 4 | Cigarette Lighter | 90980-11606 |
| | Cigarette Lighter Illumination | |
| C 5 | Clock (Automatic A/C) | 90980-12200 |
| | Clock (Manual A/C) | 90980-11911 |
| C 6 | Clutch Start SW | 90980-10825 |
| C 7 | Combination Meter | 90980-12170 |
| C 8 | Combination Meter | 90980-12200 |
| C 9 | Combination SW | 90980-11594 |
| C10 | Combination SW | 90980-12183 |
| C11 | Combination SW | 90980-11672 |
| C12 | Cruise Control Clutch SW | 90980-10906 |
| C13 | Choke Coil | 90980-11259 |
| C14 | Curtain Shield Airbag Sensor LH | 90980-12241 |
| C15 | Curtain Shield Airbag Sensor RH | |
| C16 | Curtain Shield Airbag Squib LH (TMC Made) | 90980-12219 |
| | Curtain Shield Airbag Squib LH (TMMK Made) | 90980-11884 |
| C17 | Curtain Shield Airbag Squib RH (TMC Made) | 90980-12219 |
| | Curtain Shield Airbag Squib RH (TMMK Made) | 90980-11884 |
| D 1 | Diode (A/C No.1) | 90980-11071 |
| D 2 | Diode (A/C No.2) | 90980-10962 |
| D 3 | Data Link Connector 3 | 90980-11665 |
| D 4 | Diode | 90980-10962 |
| D 5 | Door Control Receiver | 90980-11909 |
| D 6 | Door Courtesy SW Front LH | 90980-10871 |
| D 7 | Door Courtesy SW Front RH | |
| D 8 | Door Courtesy SW Rear LH | |
| D 9 | Door Courtesy SW Rear RH | |
| D10 | Door Key Lock and Unlock SW Front LH | 90980-12226 |
| | Door Lock Motor Front LH | |
| | Door Unlock Detection SW Front LH | |

Note: Not all of the above part numbers of the connector are established for the supply.

| Code | Part Name | Part Number |
|---|---|---|
| D11 | Door Key Lock and Unlock SW Front RH | 90980-12226 |
| | Door Lock Motor Front RH | |
| | Door Unlock Detection SW Front RH | |
| D12 | Door Lock Control SW Front LH | 90980-12122 |
| | Power Window Master SW | |
| D13 | Door Lock Control SW RH (TMC Made) | 82824-12270 |
| | Door Lock Control SW RH (TMMK Made) | 90980-10797 |
| D14 | Door Lock Motor Rear LH | 90980-12226 |
| | Door Unlock Detection SW Rear LH | |
| D15 | Door Lock Motor Rear RH | |
| | Door Unlock Detection SW Rear RH | |
| D16 | Daytime Running Light Resistor | 90980-10928 |
| E 3 | Electronically Controlled Transmission Solenoid | 90980-12326 |
| E 4 | Engine Coolant Temp. Sensor (1MZ-FE, 3MZ-FE) | 90980-10737 |
| | Engine Coolant Temp. Sensor (2AZ-FE) | 90980-10735 |
| E 5 | Engine Hood Courtesy SW | 90980-11003 |
| E 6 | Engine Control Module | 90980-12525 |
| E 7 | Engine Control Module | 90980-12146 |
| E 8 | Engine Control Module | 90980-12143 |
| E 9 | Engine Control Module | 90980-12145 |
| E10 | Engine Control Module | 90980-12144 |
| F 1 | Front Fog Light LH | 90980-11096 |
| F 2 | Front Fog Light RH | |
| F 5 | Front Wiper Motor | 90980-11599 |
| F 6 | Front Door Speaker LH (TMC Made) | 82824-12260 |
| | Front Door Speaker LH (TMMK Made) | 90980-10935 |
| F 7 | Front Door Speaker RH (TMC Made) | 82824-12260 |
| | Front Door Speaker RH (TMMK Made) | 90980-10935 |
| F 8 | Fuel Pump | 90980-11077 |
| | Fuel Sender | |
| F 9 | Front Parking Light LH | 90980-10887 |
| F10 | Front Parking Light RH | |
| F11 | Front Turn Signal Light LH (TMC Made) | 90980-11019 |
| | Front Turn Signal Light LH (TMMK Made) | 90980-11020 |
| F12 | Front Turn Signal Light RH (TMC Made) | 90980-11019 |
| | Front Turn Signal Light RH (TMMK Made) | 90980-11020 |
| G 1 | Generator | 90980-09213 |
| G 2 | Generator | 90980-11964 |
| G 3 | Glove Box Light and SW | 90980-11098 |
| G 4 | Garage Door Opener | 90980-10789 |
| | Moon Roof Control SW | |
| | Personal Light | |
| H 1 | Headlight LH (High) | 90980-11095 |
| H 2 | Headlight LH (Low) | 90980-11096 |

| Code | Part Name | Part Number |
|---|---|---|
| H 3 | Headlight RH (High) | 90980-11095 |
| H 4 | Headlight RH (Low) | 90980-11096 |
| H 6 | Heated Oxygen Sensor (Bank 1 Sensor 2) (1MZ-FE, 3MZ-FE) | 90980-10869 |
| | Heated Oxygen Sensor (Bank 1 Sensor 2) (2AZ-FE) | 90980-11028 |
| H 7 | Heated Oxygen Sensor (Bank 2 Sensor 2) | 90980-11028 |
| H 8 | Horn (High) | 90980-10619 |
| H 9 | Horn (Low) | |
| H10 | Heater Control SW | 90980-12153 |
| H11 | Heater Control SW | 90980-11686 |
| H12 | High Mounted Stop Light (w/ Rear Spoiler) | 90980-11060 |
| | High Mounted Stop Light (w/o Rear Spoiler) | 90980-11148 |
| H13 | Heated Oxygen Sensor (Bank 1 Sensor 3) | 90980-11028 |
| I 1 | Ignition Coil and Igniter No.1 | 90980-11885 |
| I 2 | Ignition Coil and Igniter No.2 | |
| I 3 | Ignition Coil and Igniter No.3 | |
| I 4 | Ignition Coil and Igniter No.4 | |
| I 5 | Ignition Coil and Igniter No.5 | |
| I 6 | Ignition Coil and Igniter No.6 | |
| I 7 | Injector No.1 (1MZ-FE, 3MZ-FE) | 90980-11153 |
| | Injector No.1 (2AZ-FE) | 90980-11875 |
| I 8 | Injector No.2 (1MZ-FE, 3MZ-FE) | 90980-11153 |
| | Injector No.2 (2AZ-FE) | 90980-11875 |
| I 9 | Injector No.3 (1MZ-FE, 3MZ-FE) | 90980-11153 |
| | Injector No.3 (2AZ-FE) | 90980-11875 |
| I10 | Injector No.4 (1MZ-FE, 3MZ-FE) | 90980-11153 |
| | Injector No.4 (2AZ-FE) | 90980-11875 |
| I11 | Injector No.5 | 90980-11153 |
| I12 | Injector No.6 | |
| I13 | Ignition Key Cylinder Light | 90980-10679 |
| I14 | Ignition Key Cylinder Light | 90980-12092 |
| | Transponder Key Amplifier | |
| I15 | Ignition SW | 90980-11615 |
| I16 | Inner Mirror | 90980-11794 |
| I17 | Interior Light | 90980-10908 |
| I18 | Intake Air Control Valve | 90980-11599 |
| J 1 | Junction Connector (1MZ-FE, 3MZ-FE) | 90980-11542 |
| | Junction Connector (2AZ-FE) | 90980-12346 |
| J 2 | Junction Connector | 90980-11542 |
| J 4 | Junction Connector | 90980-10976 |
| J 5 | Junction Connector | 90980-11661 |
| J 6 | Junction Connector | |
| J 7 | Junction Connector | |
| J 8 | Junction Connector | |
| J11 | Junction Connector | 90980-10976 |

# L PART NUMBER OF CONNECTORS

| Code | Part Name | Part Number |
|---|---|---|
| J12 | Junction Connector | 90980-11915 |
| J13 | Junction Connector | 90980-12355 |
| J14 | Junction Connector | |
| J15 | Junction Connector | |
| J16 | Junction Connector | |
| J17 | Junction Connector | |
| J18 | Junction Connector | 90980-12374 |
| J19 | Junction Connector | |
| J20 | Junction Connector | |
| J21 | Junction Connector | |
| J22 | Junction Connector | 90980-11915 |
| J23 | Junction Connector | |
| K 1 | Keyless Buzzer | 90980-11142 |
| K 2 | Knock Sensor (Bank 1) | 90980-11875 |
| K 3 | Knock Sensor (Bank 1) (1MZ-FE) | 90980-11166 |
| | Knock Sensor (Bank 1) (3MZ-FE) | 90980-11875 |
| K 4 | Knock Sensor (Bank 2) (1MZ-FE) | 90980-11166 |
| | Knock Sensor (Bank 2) (3MZ-FE) | 90980-11875 |
| L 1 | License Plate Light LH | 90980-11148 |
| L 2 | License Plate Light RH | |
| L 3 | Luggage Compartment Door Key Unlock SW | 90980-11060 |
| L 4 | Luggage Compartment Door Opener Motor | 90980-10825 |
| | Luggage Compartment Light SW | |
| L 5 | Luggage Compartment Light | 90980-11148 |
| M 1 | Mass Air Flow Meter | 90980-11317 |
| M 2 | Mirror Heater LH (TMC Made w/ Mirror Heater) | 90980-10558 |
| | Mirror Heater LH (TMC Made w/o Mirror Heater) | 90980-10395 |
| | Mirror Heater LH (TMMK Made) | 90980-11488 |
| | Remote Control Mirror LH (TMC Made w/ Mirror Heater) | 90980-10558 |
| | Remote Control Mirror LH (TMC Made w/o Mirror Heater) | 90980-10395 |
| | Remote Control Mirror LH (TMMK Made) | 90980-11488 |
| M 3 | Mirror Heater RH (TMC Made w/ Mirror Heater) | 90980-10558 |
| | Mirror Heater RH (TMC Made w/o Mirror Heater) | 90980-10395 |
| | Mirror Heater RH (TMMK Made) | 90980-11488 |
| | Remote Control Mirror RH (TMC Made w/ Mirror Heater) | 90980-10558 |
| | Remote Control Mirror RH (TMC Made w/o Mirror Heater) | 90980-10395 |
| | Remote Control Mirror RH (TMMK Made) | 90980-11488 |

| Code | Part Name | Part Number |
|---|---|---|
| M 4 | Moon Roof Control ECU and Motor (TMC Made) | 90980-10997 |
| | Moon Roof Control ECU and Motor (TMMK Made) | 90980-10799 |
| N 1 | Noise Filter (Ignition) | 90980-10843 |
| N 4 | Noise Filter | 90980-10860 |
| O 1 | Oil Pressure SW | 90980-11363 |
| O 3 | Occupant Classification ECU | 90980-12357 |
| O 4 | Occupant Classification ECU | 90980-12356 |
| O 5 | Occupant Classification Sensor Front RH | 90980-12354 |
| O 6 | Occupant Classification Sensor Rear RH | 90980-12353 |
| O 7 | Occupant Classification Sensor Front LH | |
| O 8 | Occupant Classification Sensor Rear LH | 90980-12354 |
| O 9 | Occupant Classification ECU | 90980-12357 |
| O10 | Occupant Classification ECU | 90980-12356 |
| O11 | Occupant Classification Sensor Front RH | 90980-12354 |
| O12 | Occupant Classification Sensor Rear RH | 90980-12353 |
| O13 | Occupant Classification Sensor Front LH | |
| O14 | Occupant Classification Sensor Rear LH | 90980-12354 |
| P 1 | Power Steering Oil Pressure SW | 90980-11428 |
| P 2 | Pressure SW | 90980-10943 |
| P 3 | Parking Brake SW (w/ Power Adjustable Pedals) | 90980-10860 |
| | Parking Brake SW (w/o Power Adjustable Pedals) | 90980-10871 |
| P 4 | Power Outlet (Front) | 90980-10760 |
| P 5 | Power Outlet (Rear) | 90980-10860 |
| P 6 | Power Window Control SW Front RH (TMC Made) | 82824-12230 |
| | Power Window Control SW Front RH (TMMK Made) | 90980-10789 |
| P 7 | Power Window Control SW Rear LH | 90980-10789 |
| P 8 | Power Window Control SW Rear RH (TMC Made) | 82824-12230 |
| | Power Window Control SW Rear RH (TMMK Made) | 90980-10789 |
| P 9 | Power Window Motor Front LH (TMC Made) | 82824-12270 |
| | Power Window Motor Front LH (TMMK Made) | 90980-10797 |
| P10 | Power Window Motor Front RH (TMC Made) | 82824-12270 |
| | Power Window Motor Front RH (TMMK Made) | 90980-10797 |
| P11 | Power Window Motor Rear LH | 90980-10797 |
| P12 | Power Window Motor Rear RH | |

Note: Not all of the above part numbers of the connector are established for the supply.

| Code | Part Name | Part Number |
|---|---|---|
| P13 | Pretensioner LH | 90980-12253 |
| P14 | Pretensioner RH | |
| P15 | Power Seat Control SW (Driver's Seat) | 90980-10997 |
| P16 | Power Seat Control SW (Front Passenger's Seat) | |
| P17 | Power Seat Motor (Driver's Seat Front Vertical Control) | 90980-10825 |
| P18 | Power Seat Motor (Driver's Seat Lifter Control) | |
| P19 | Power Seat Motor (Driver's Seat Reclining Control) | |
| P20 | Power Seat Motor (Driver's Seat Slide Control) | |
| P22 | Power Seat Motor (Front Passenger's Seat Front Vertical Control) | |
| P23 | Power Seat Motor (Front Passenger's Seat Lifter Control) | |
| P24 | Power Seat Motor (Front Passenger's Seat Reclining Control) | |
| P25 | Power Seat Motor (Front Passenger's Seat Slide Control) | |
| P28 | Power Seat Control SW (Driver's Seat Lumbar Support Control) (TMC Made) | 90980-10789 |
| | Power Seat Control SW (Driver's Seat Lumbar Support Control) (TMMK Made) | 90980-10601 |
| P29 | Power Seat Motor (Driver's Seat Lumbar Support Control) | 90980-10825 |
| R 1 | Radiator Fan Motor | 90980-10928 |
| R 2 | Radio and Player | 90980-10997 |
| R 3 | Radio and Player | 90980-10996 |
| R 4 | Radio and Player with Display (w/ Navigation System) | 90980-12038 |
| | Radio and Player (w/o Navigation System) | |
| R 5 | Rheostat | 90980-11950 |
| R 6 | Rear Combination Light LH | 90980-11587 |
| R 7 | Rear Combination Light RH | |
| R 8 | Rear Speaker LH | 90980-11299 |
| R 9 | Rear Speaker RH | |
| R10 | Remote Control Mirror SW | 90980-11657 |
| R12 | Radio and Player with Display | 90980-11909 |
| R13 | Radio and Player with Display (w/ Navigation System) | 90980-12259 |
| | Radio and Player (w/o Navigation System) | |
| S 1 | Skid Control ECU with Actuator (TMC Made w/o VSC) | 90980-12020 |
| | Skid Control ECU with Actuator (TMMK Made w/o VSC) | 90080-98317 |
| | Skid Control ECU with Actuator (w/ VSC) | 90980-12297 |
| S 2 | Starter | 90980-11400 |
| S 3 | Starter | 90980-09463 |
| S 4 | Seat Heater SW (Driver's Seat) | 90980-10964 |

| Code | Part Name | Part Number |
|---|---|---|
| S 5 | Seat Heater SW (Front Passenger's Seat) | 90980-10933 |
| S 6 | Shift Lock Control ECU | 90980-11909 |
| S11 | Steering Sensor | 82824-45030 |
| S12 | Stereo Component Amplifier | 90980-10848 |
| S13 | Stereo Component Amplifier | 90980-10807 |
| S14 | Stop Light SW | 90980-11118 |
| S15 | Side Airbag Sensor LH | 90980-12241 |
| S16 | Side Airbag Sensor RH | |
| S17 | Seat Heater LH | 90980-10906 |
| S18 | Seat Heater RH | |
| S19 | Side Airbag Squib LH | 90980-11864 |
| S20 | Side Airbag Squib RH | |
| T 1 | Theft Deterrent Horn | 90980-10619 |
| T 4 | Turbine Speed Sensor | 90980-11156 |
| T 5 | Theft Deterrent ECU | 90980-11423 |
| T 6 | TRAC OFF SW | 90980-11013 |
| T 7 | Turn Signal Flasher Relay | 90980-10799 |
| T 9 | Tweeter LH | 90980-11013 |
| T10 | Tweeter RH | |
| T11 | Transponder Key Computer | 90980-11911 |
| T12 | Throttle Control Motor | 90980-11858 |
| | Throttle Position Sensor | |
| U 1 | Unlock Warning SW | 90980-10860 |
| V 3 | VSV (AICV) | 90980-11156 |
| V 4 | VSV (Canister Closed Valve) | 90980-11859 |
| V 6 | VSV (EVAP) | 90980-11156 |
| V 7 | VVT Solenoid | 90980-11162 |
| V 8 | VSC Warning Buzzer | 90980-10906 |
| V 9 | Vanity Light LH | 90980-10621 |
| V10 | Vanity Light RH | |
| V11 | Vapor Pressure Sensor (TMC Made) | 90980-11143 |
| | Vapor Pressure Sensor (TMMK Made) | 90980-11860 |
| V13 | VSV (ACIS No.1) | 90980-11149 |
| V14 | VSV (ACIS No.2) | |
| V15 | VSV (ACM) | 90980-11156 |
| V16 | VVT Sensor LH | 90980-10947 |
| V17 | VVT Sensor RH | |
| V18 | VVT Solenoid LH | 90980-11162 |
| V19 | VVT Solenoid RH | |
| W 1 | Washer Level Sensor | 90980-11068 |
| W 2 | Washer Motor | 90980-10981 |
| W 3 | Water Temp. SW No.1 | 90980-11235 |
| W 4 | Water Temp. SW No.2 | 90980-11243 |
| Y 1 | Yaw Rate Sensor | 90980-11904 |
| Z 1 | Option Connector (TVIP ECU) | 90980-10860 |

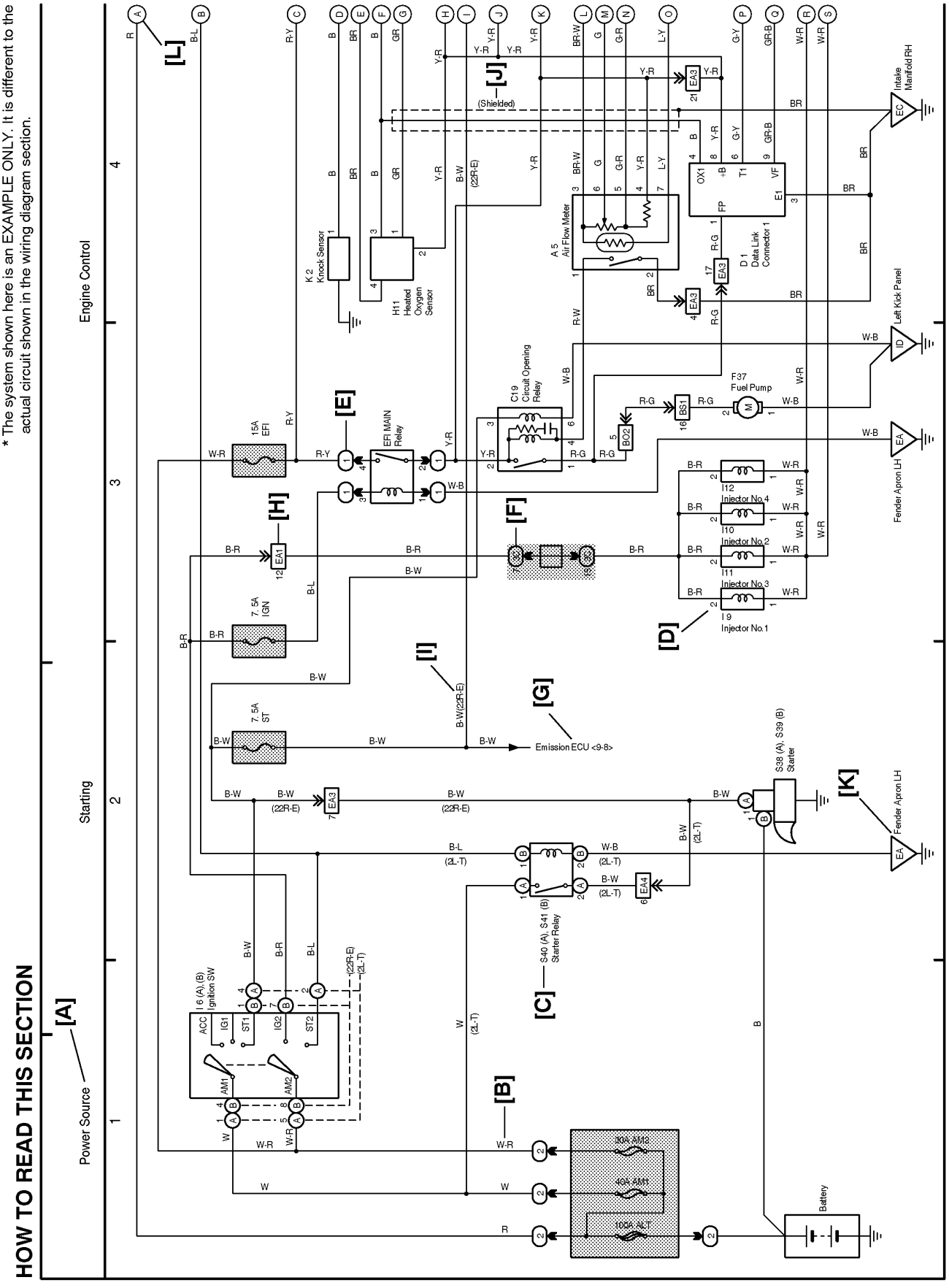
* The system shown here is an EXAMPLE ONLY. It is different to the actual circuit shown in the wiring diagram section.
HOW TO READ THIS SECTION
Power Source
Starting
Engine Control
[A]
[B]
[C]
[D]
[E]
[F]
[G]
[H]
[I]
[J]
[K]
[L]
Battery
Emission ECU <9-8>
Intake Manifold RH
Left Kick Panel
Fender Apron LH
Fender Apron LH
Data Link Connector 1
Air Flow Meter
Knock Sensor
Heated Oxygen Sensor
Circuit Opening Relay
Fuel Pump
EFI MAIN Relay
Injector No.4
Injector No.2
Injector No.3
Injector No.1
Starter Relay
Ignition SW
(Shielded)

**[A]** : System Title

**[B]** : Indicates the wiring color.

Wire colors are indicated by an alphabetical code.

| | | | | | |
|---|---|---|---|---|---|
| B | = Black | W | = White | BR | = Brown |
| L | = Blue | V | = Violet | SB | = Sky Blue |
| R | = Red | G | = Green | LG | = Light Green |
| P | = Pink | Y | = Yellow | GR | = Gray |
| O | = Orange | | | | |

The first letter indicates the basic wire color and the second letter indicates the color of the stripe.

Example: L - Y

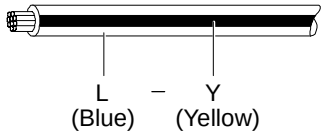


**[C]** : The position of the parts is the same as shown in the wiring diagram and wire routing.

**[D]** : Indicates the pin number of the connector. The numbering system is different for female and male connectors.

Example : Numbered in order from upper left to lower right / Numbered in order from upper right to lower left

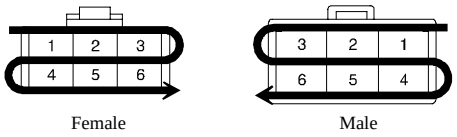


The numbering system for the overall wiring diagram is the same as above

**[E]** : Indicates a Relay Block. No shading is used and only the Relay Block No. is shown to distinguish it from the J/B.

Example : (1) Indicates Relay Block No.1

**[F]** : Junction Block (The number in the circle is the J/B No. and the connector code is shown beside it). Junction Blocks are shaded to clearly separate them from other parts.

Example:

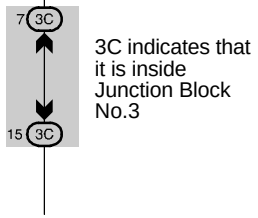


**[G]** : Indicates related system.

**[H]** : Indicates the wiring harness and wiring harness connector. The wiring harness with male terminal is shown with arrows ( » ). Outside numerals are pin numbers.

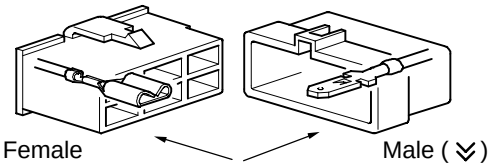


**[I]** : ( ) is used to indicate different wiring and connector, etc. when the vehicle model, engine type, or specification is different.

**[J]** : Indicates a shielded cable.



**[K]** : Indicates and located on ground point.

**[L]** : The same code occuring on the next page indicates that the wire harness is continuous.

# SYSTEM INDEX


| SYSTEMS | LOCATION |
|---|---|
| ABS (TMC Made) | 14-2 |
| ABS (TMMK Made) | 15-2 |
| Audio System (Built-in Type Amplifier w/o Navigation System) | 29-3 |
| Audio System (Separate Type Amplifier w/o Navigation System) | 28-2 |
| Audio System (w/ Navigation System) | 27-2 |
| Automatic Air Conditioning (1MZ-FE) | 32-2 |
| Automatic Air Conditioning (2AZ-FE) | 33-2 |
| Automatic Glare-Resistant EC Mirror | 21-3 |
| Back-Up Light | 12-2 |
| Charging | 4-2 |
| Cigarette Lighter | 23-2 |
| Clock | 26-2 |
| Combination Meter | 30-2 |
| Cruise Control (1MZ-FE, 3MZ-FE) | 5-18 |
| Cruise Control (2AZ-FE) | 6-18 |
| Electronically Controlled Transmission and A/T Indicator (1MZ-FE, 3MZ-FE) | 7-2 |
| Electronically Controlled Transmission and A/T Indicator (2AZ-FE) | 8-2 |
| Engine Control (1MZ-FE, 3MZ-FE) | 5-8 |
| Engine Control (2AZ-FE) | 6-8 |
| Engine Immobilizer System (1MZ-FE, 3MZ-FE) | 5-3 |
| Engine Immobilizer System (2AZ-FE) | 6-4 |
| Fog Light | 12-4 |
| Horn | 17-4 |
| Ignition (1MZ-FE, 3MZ-FE) | 2-2 |
| Ignition (2AZ-FE) | 3-2 |
| Illumination | 10-2 |
| Manual Air Conditioning (1MZ-FE, 3MZ-FE) | 34-3 |
| Manual Air Conditioning (2AZ-FE) | 35-3 |
| Mirror Heater | 20-4 |

| SYSTEMS | LOCATION |
|---|---|
| Moon Roof | 21-4 |
| Multiplex Communication System (BEAN) | 1-2 |
| ∗Automatic Light Control | |
| ∗Door Lock Control | |
| ∗Garage Door Opener | |
| ∗Headlight | |
| ∗Interior Light | |
| ∗Key Reminder | |
| ∗Light Auto Turn Off System | |
| ∗Theft Deterrent | |
| ∗Wireless Door Lock Control | |
| Multiplex Communication System (CAN) | 13-11 |
| Navigation System | 27-2 |
| Power Adjustable Pedals | 25-2 |
| Power Outlet | 23-2 |
| Power Seat | 24-2 |
| Power Source | 1~35-1 |
| Power Window | 18-3 |
| Radiator Fan and Condenser Fan | 31-2 |
| Rear Window Defogger | 20-3 |
| Remote Control Mirror | 19-3 |
| Seat Belt Warning | 17-2 |
| Seat Heater | 23-4 |
| Shift Lock | 23-3 |
| SRS | 16-2 |
| Starting (1MZ-FE, 3MZ-FE) | 2-2 |
| Starting (2AZ-FE) | 3-2 |
| Stop Light | 9-3 |
| Taillight | 9-2 |
| Turn Signal and Hazard Warning Light | 11-2 |
| VSC | 13-4 |
| Wiper and Washer | 22-3 |

(Cont. next page)

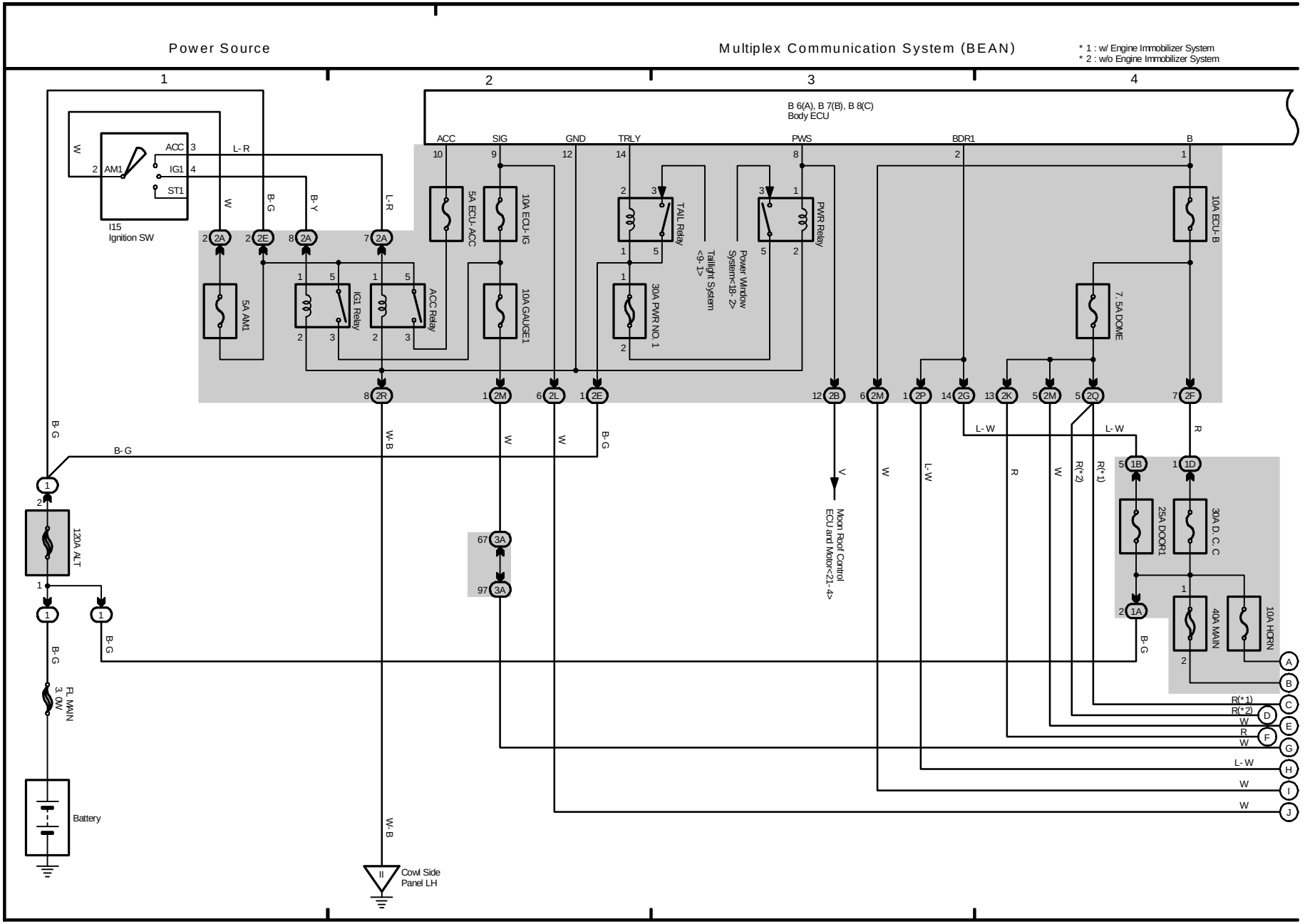

# M OVERALL ELECTRICAL WIRING DIAGRAM

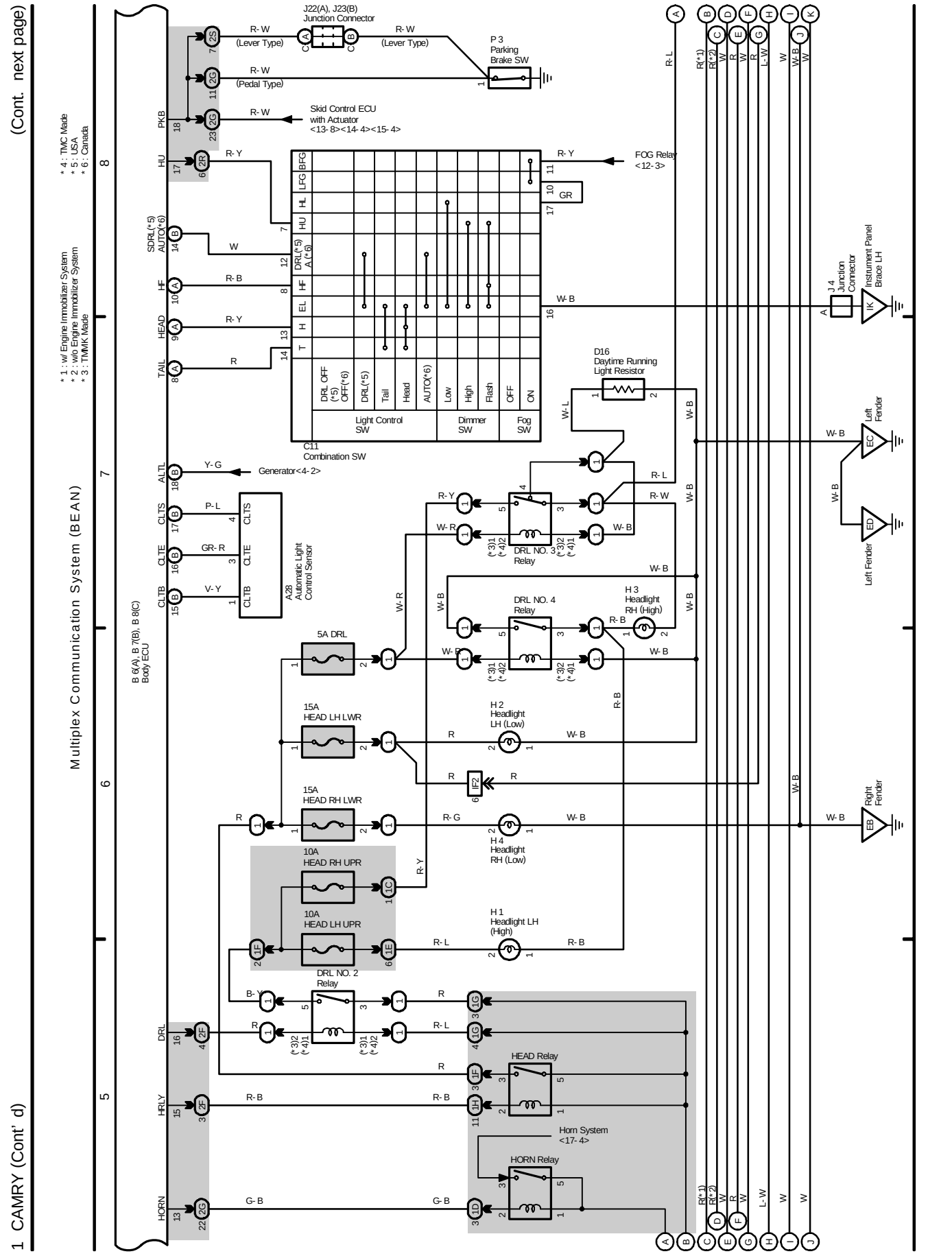

(Cont. next page)

Multiplex Communication System (BEAN)

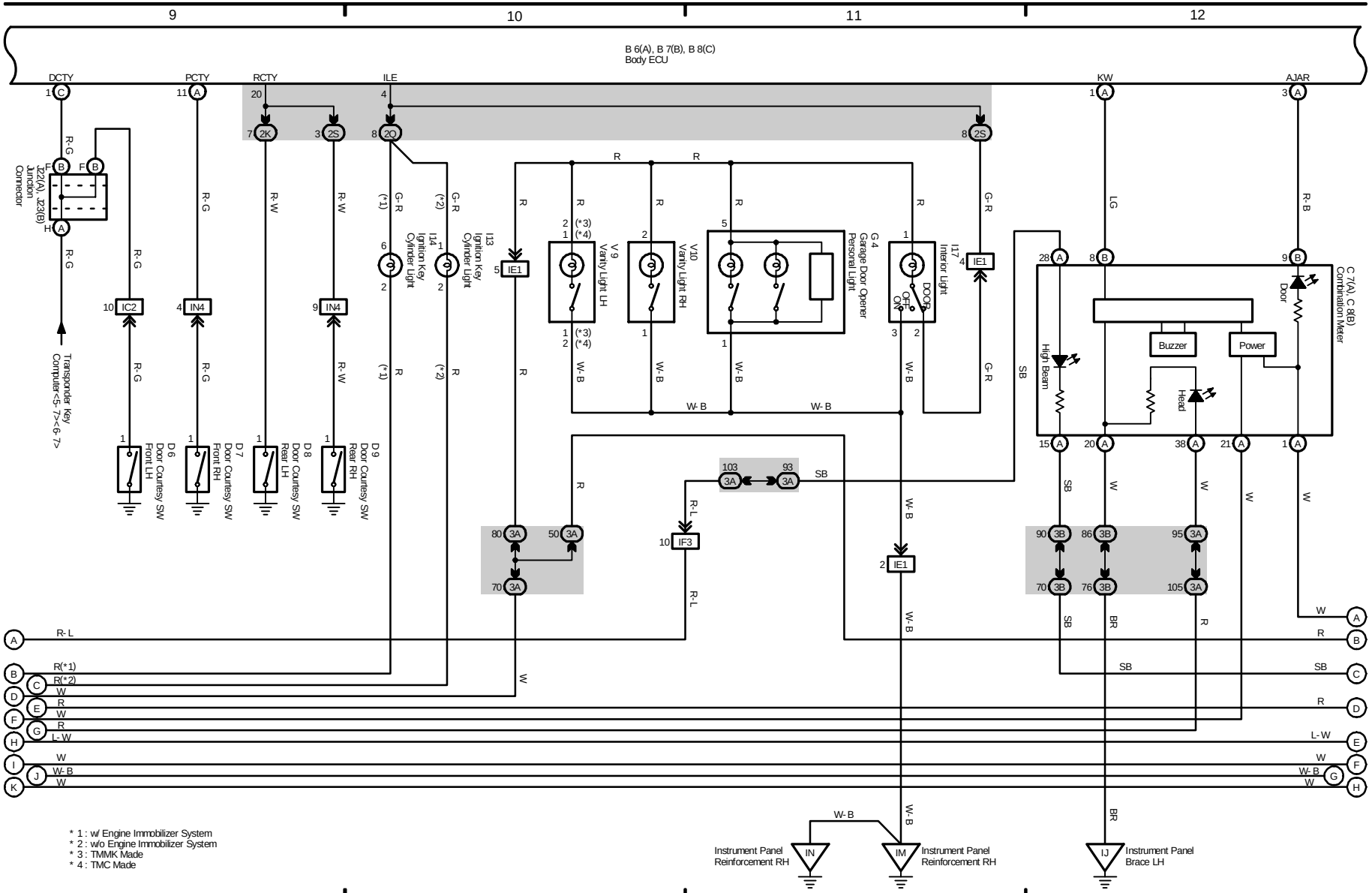

# M OVERALL ELECTRICAL WIRING DIAGRAM

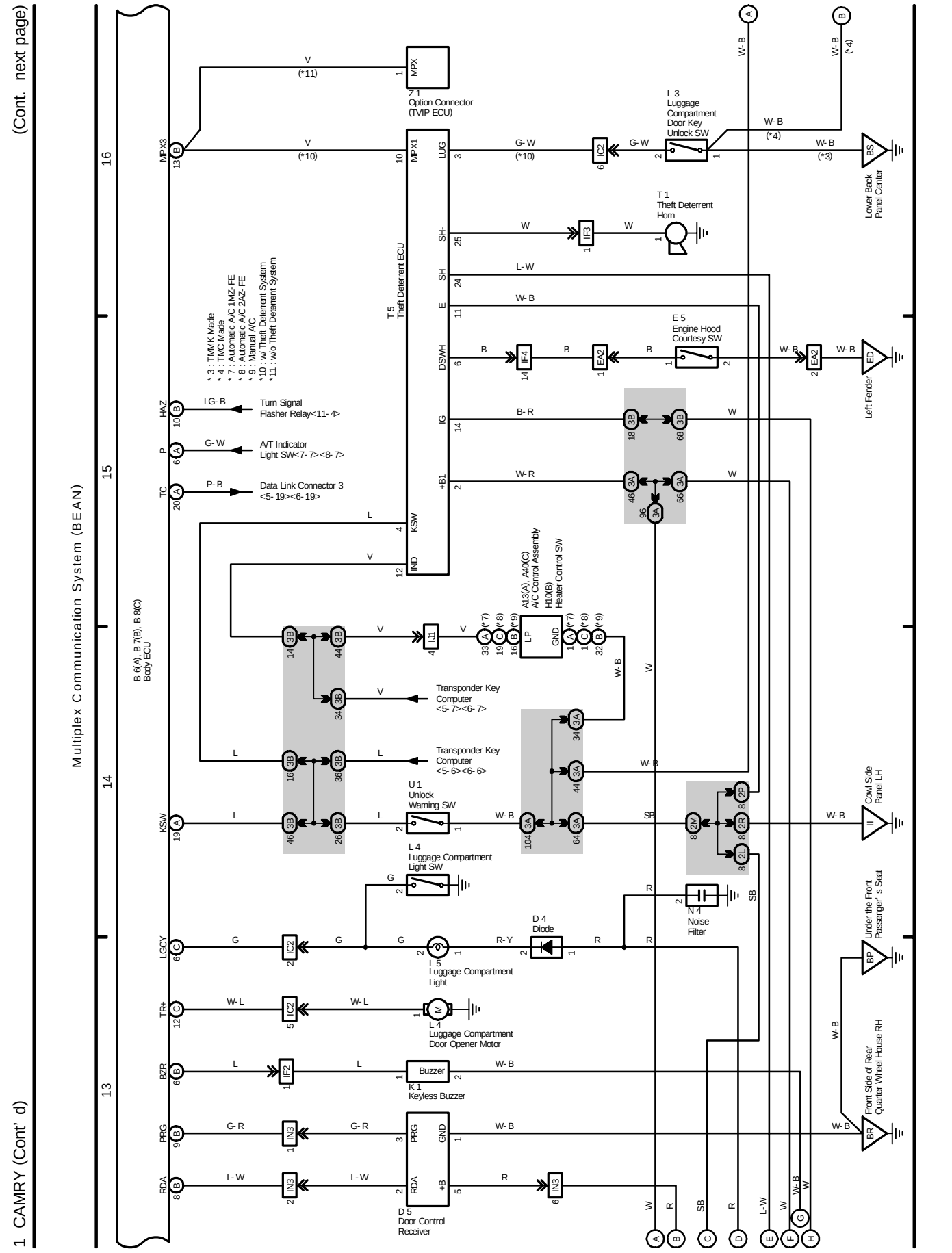

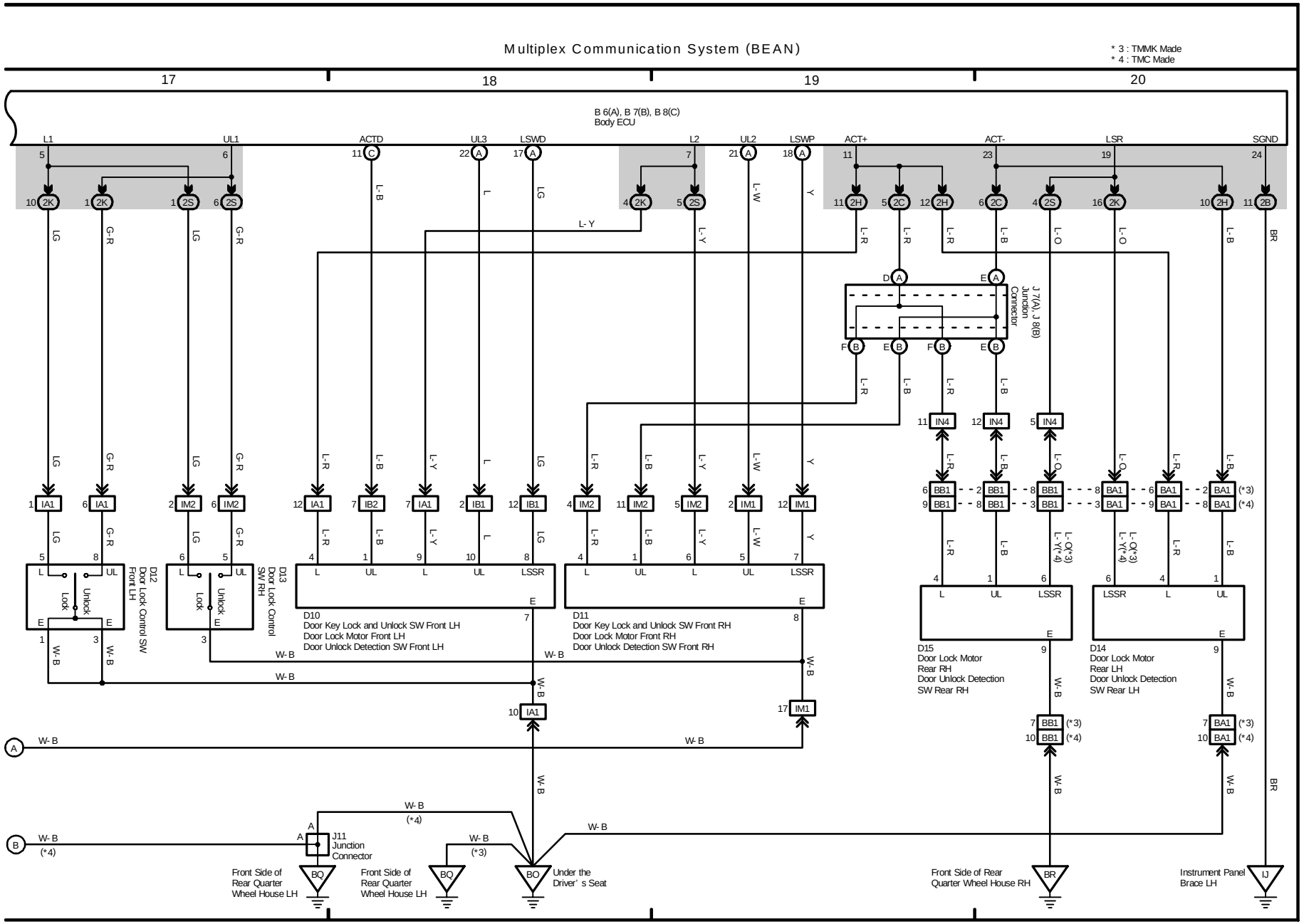
Multiplex Communication System (BEAN)
* 3 : TMMK Made
* 4 : TMC Made
17
18
19
20
B 6(A), B 7(B), B 8(C)
Body ECU
L1
UL1
ACTD
UL3
LSWD
L2
UL2
LSWP
ACT+
ACT-
LSR
SGND
J 7(A), J 8(B)
Junction
Connector
D10
Door Key Lock and Unlock SW Front LH
Door Lock Motor Front LH
Door Unlock Detection SW Front LH
D11
Door Key Lock and Unlock SW Front RH
Door Lock Motor Front RH
Door Unlock Detection SW Front RH
D12
Door Lock Control SW
Front LH
D13
Door Lock Control
SW RH
D15
Door Lock Motor
Rear RH
Door Unlock Detection
SW Rear RH
D14
Door Lock Motor
Rear LH
Door Unlock Detection
SW Rear LH
J11
Junction
Connector
Front Side of
Rear Quarter
Wheel House LH
Front Side of
Rear Quarter
Wheel House LH
Under the
Driver' s Seat
Front Side of Rear
Quarter Wheel House RH
Instrument Panel
Brace LH

# M OVERALL ELECTRICAL WIRING DIAGRAM

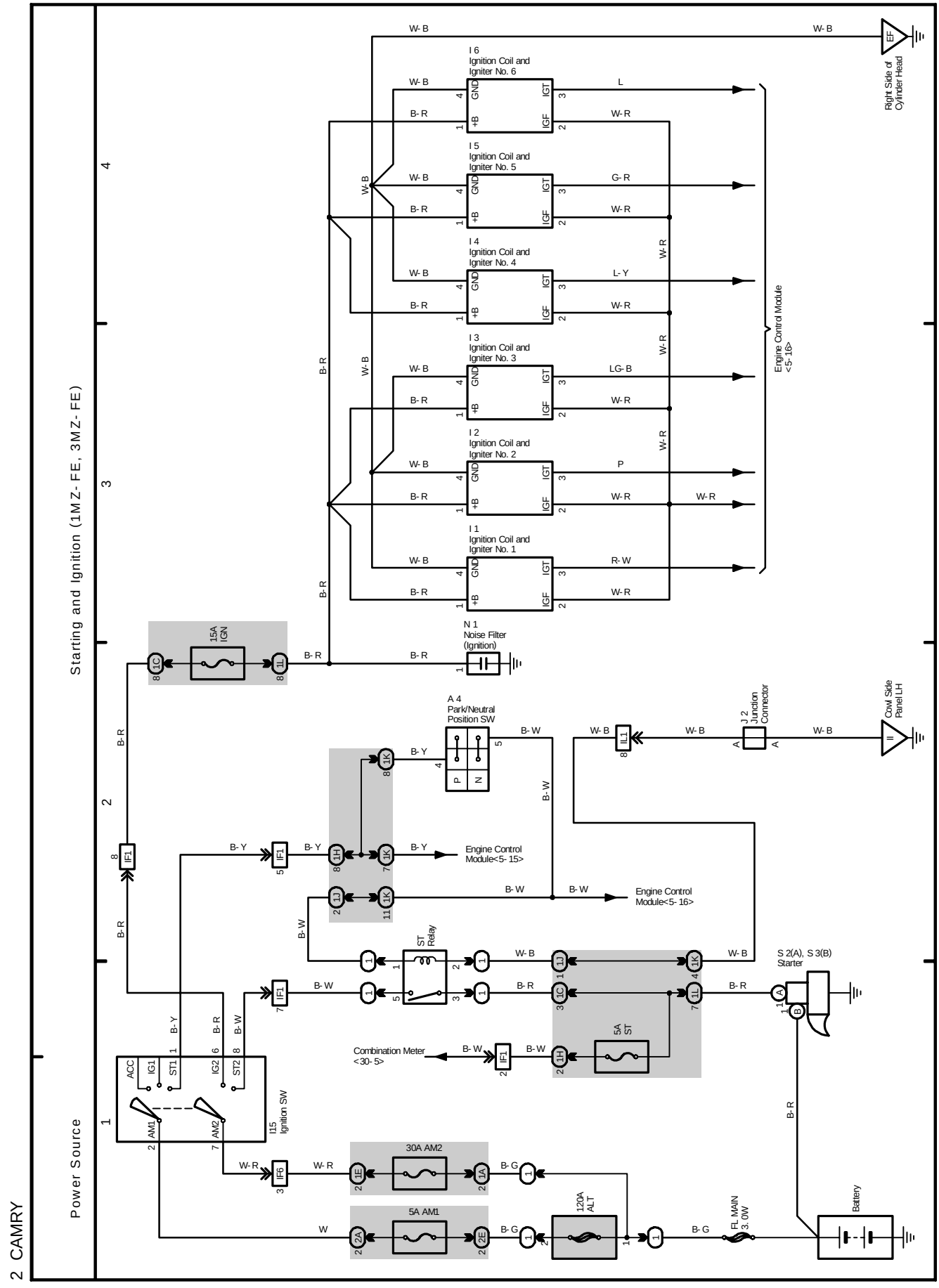

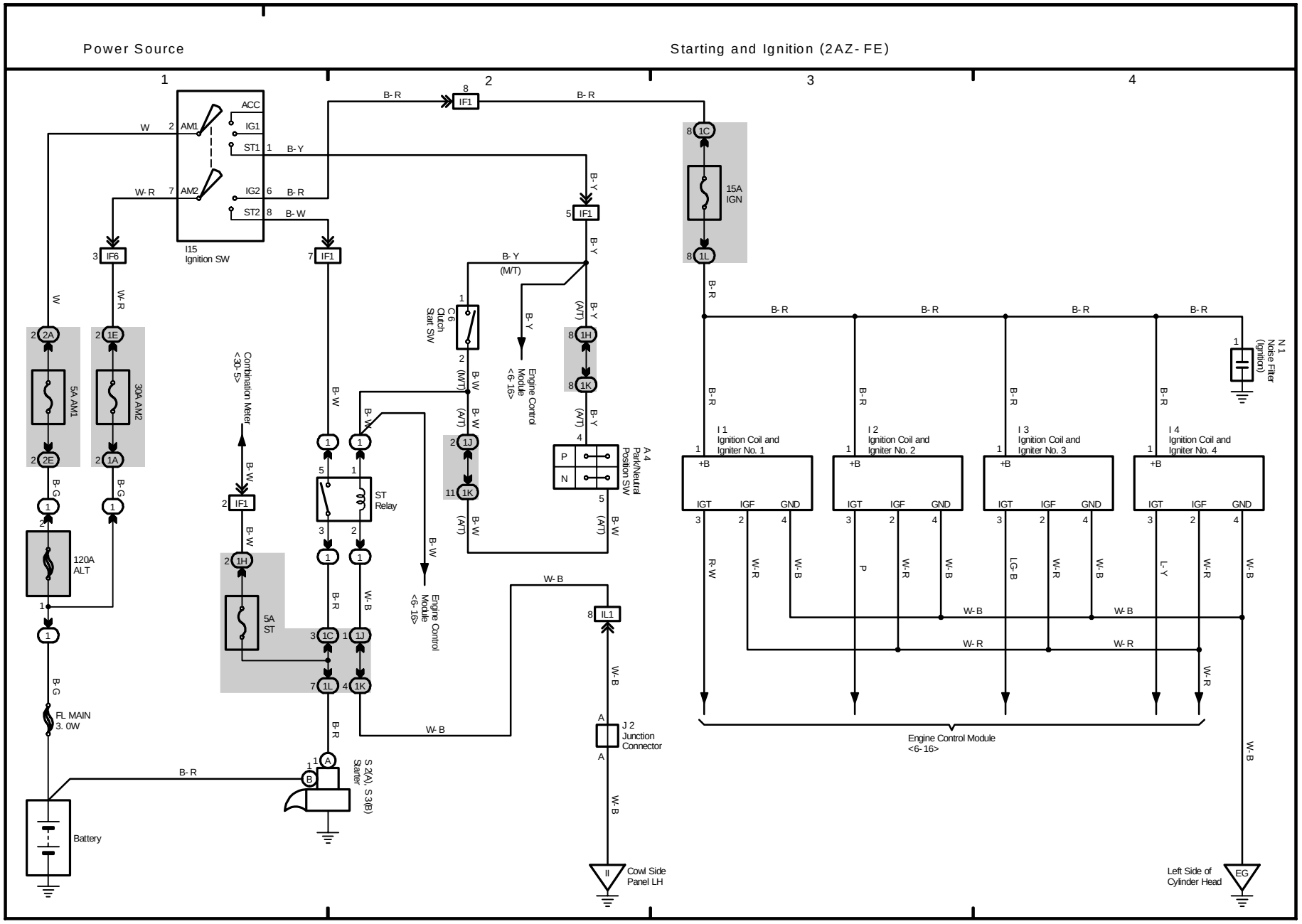
Power Source
Starting and Ignition (2AZ-FE)
1
2
3
4
ACC
IG1
ST1
IG2
ST2
AM1
AM2
I15
Ignition SW
IF1
IF6
15A
IGN
1C
1L
5A AM1
30A AM2
120A
ALT
FL MAIN
3. 0W
Battery
Combination Meter
<30-5>
5A
ST
ST
Relay
S 2(A), S 3(B)
Starter
C 6
Clutch
Start SW
(M/T)
(A/T)
Engine Control
Module
<6-16>
A 4
Park/Neutral
Position SW
P
N
I 1
Ignition Coil and
Igniter No. 1
I 2
Ignition Coil and
Igniter No. 2
I 3
Ignition Coil and
Igniter No. 3
I 4
Ignition Coil and
Igniter No. 4
+B
IGT
IGF
GND
N 1
Noise Filter
(Ignition)
J 2
Junction
Connector
IL1
Cowl Side
Panel LH
Left Side of
Cylinder Head
EG
B-R
B-Y
W
W-R
B-W
B-G
W-B
R-W
P
W-R
W-B
LG-B
L-Y

# M OVERALL ELECTRICAL WIRING DIAGRAM

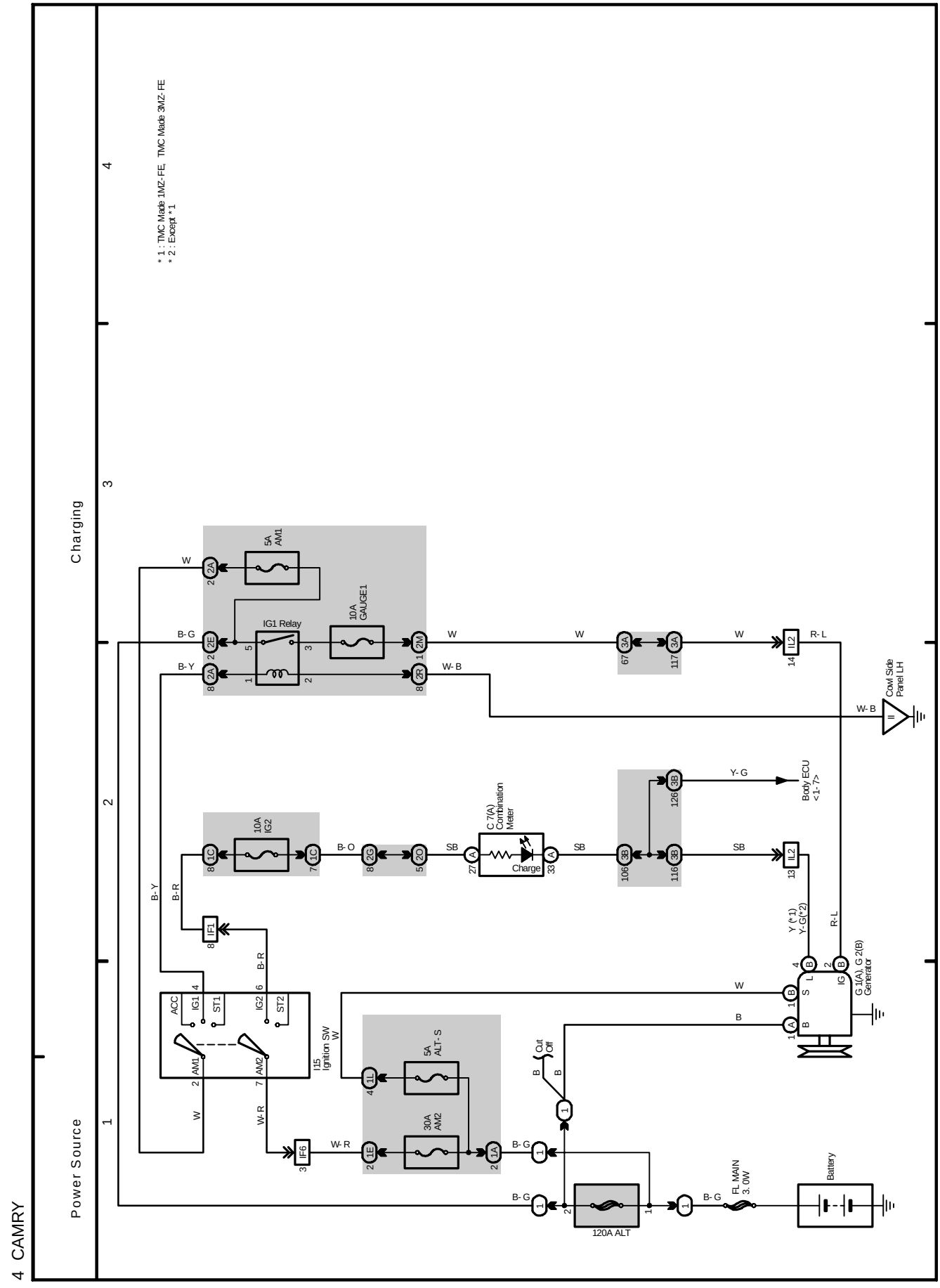

(Cont. next page)

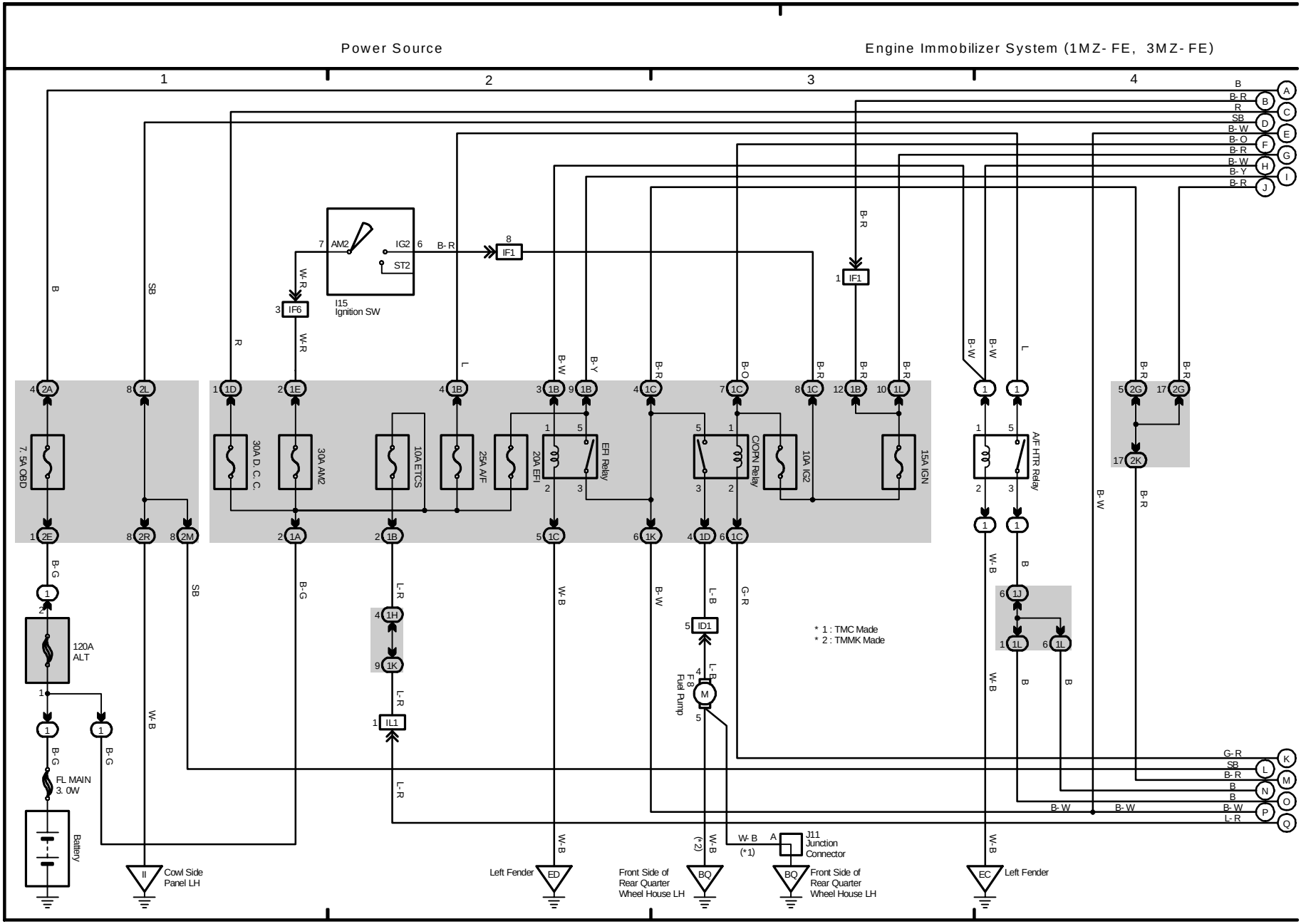

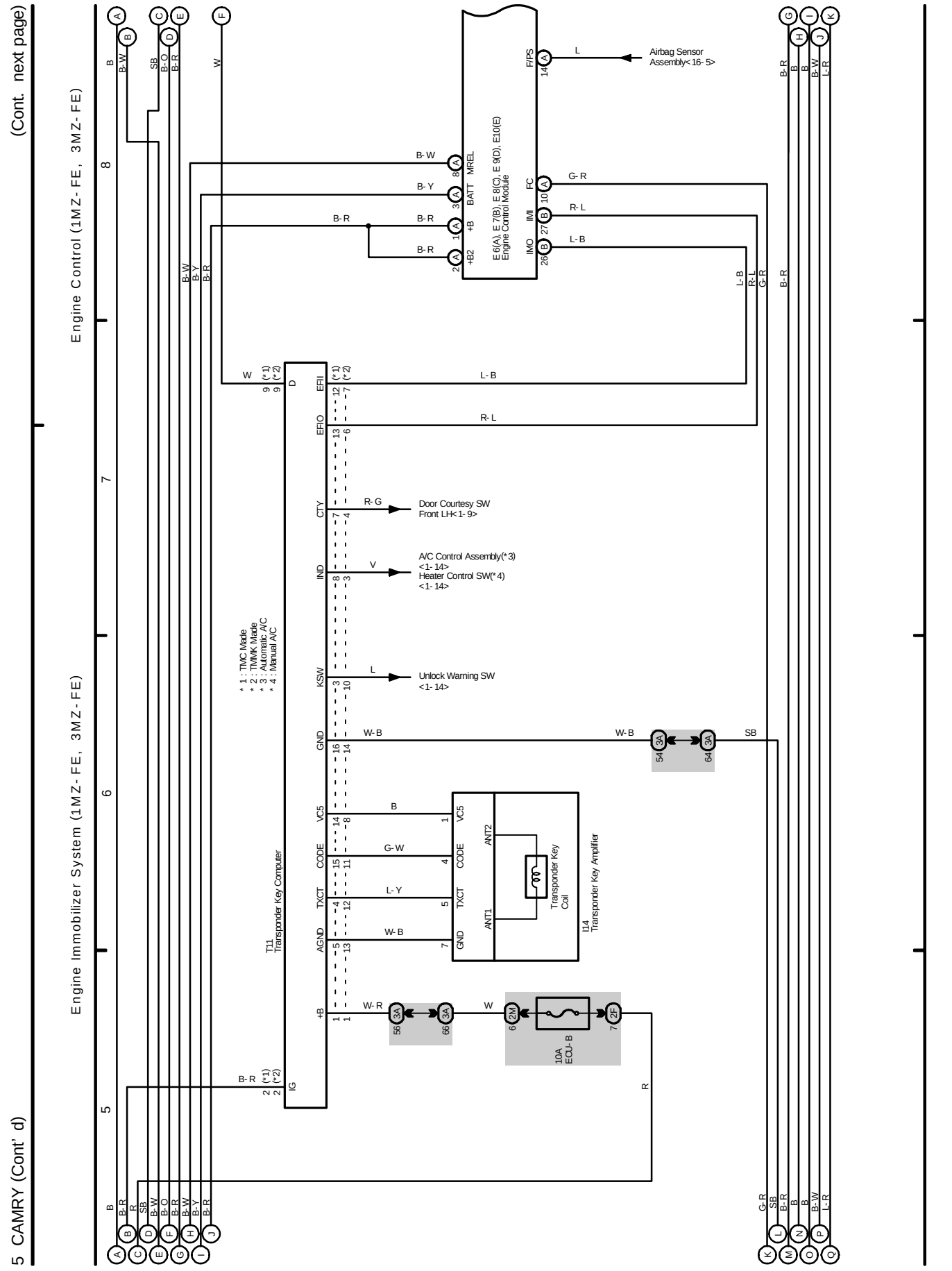
(Cont. next page)
5 CAMRY (Cont' d)
Engine Immobilizer System (1MZ-FE, 3MZ-FE)
Engine Control (1MZ-FE, 3MZ-FE)
E6(A), E7(B), E8(C), E9(D), E10(E)
Engine Control Module
F/PS
FC
IMI
IMO
+B2
+B
BATT
MREL
Airbag Sensor Assembly< 16- 5>
Door Courtesy SW Front LH< 1- 9>
A/C Control Assembly(*3) <1- 14>
Heater Control SW(*4) <1- 14>
Unlock Warning SW <1- 14>
* 1 : TMC Made
* 2 : TMMK Made
* 3 : Automatic A/C
* 4 : Manual A/C
T11
Transponder Key Computer
D
IG
EFI
EFO
CTY
IND
KSW
GND
+B
VC5
CODE
TXCT
AGND
I14
Transponder Key Amplifier
ANT2
ANT1
Transponder Key Coil
10A
ECU-B

(Cont. next page)

## Engine Control (1MZ-FE, 3MZ-FE)

* 1 : TMC Made
* 2 : TMMK Made
* 3 : Automatic A/C
* 5 : Shielded
* 6 : 1MZ-FE

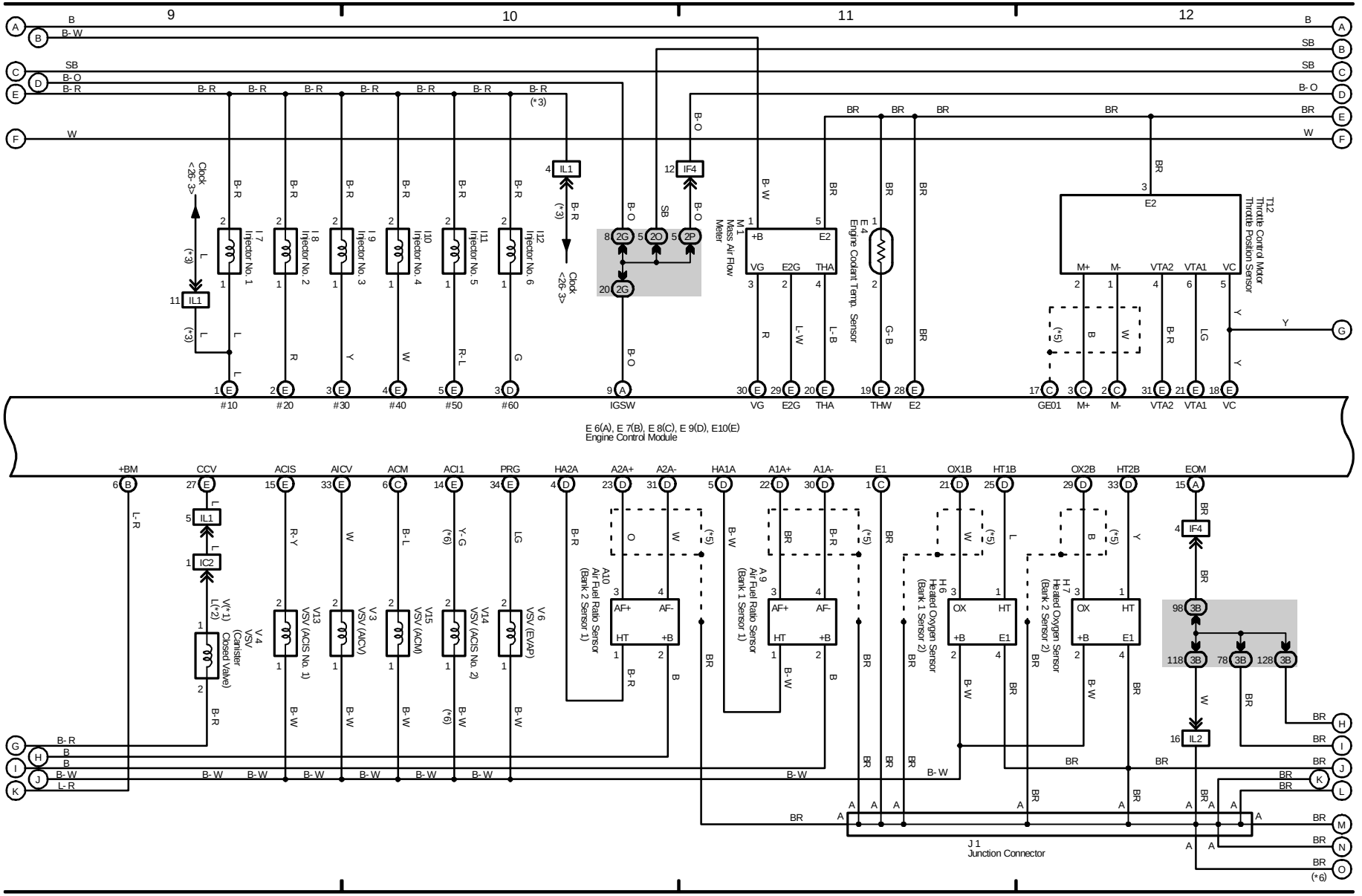

# M OVERALL ELECTRICAL WIRING DIAGRAM

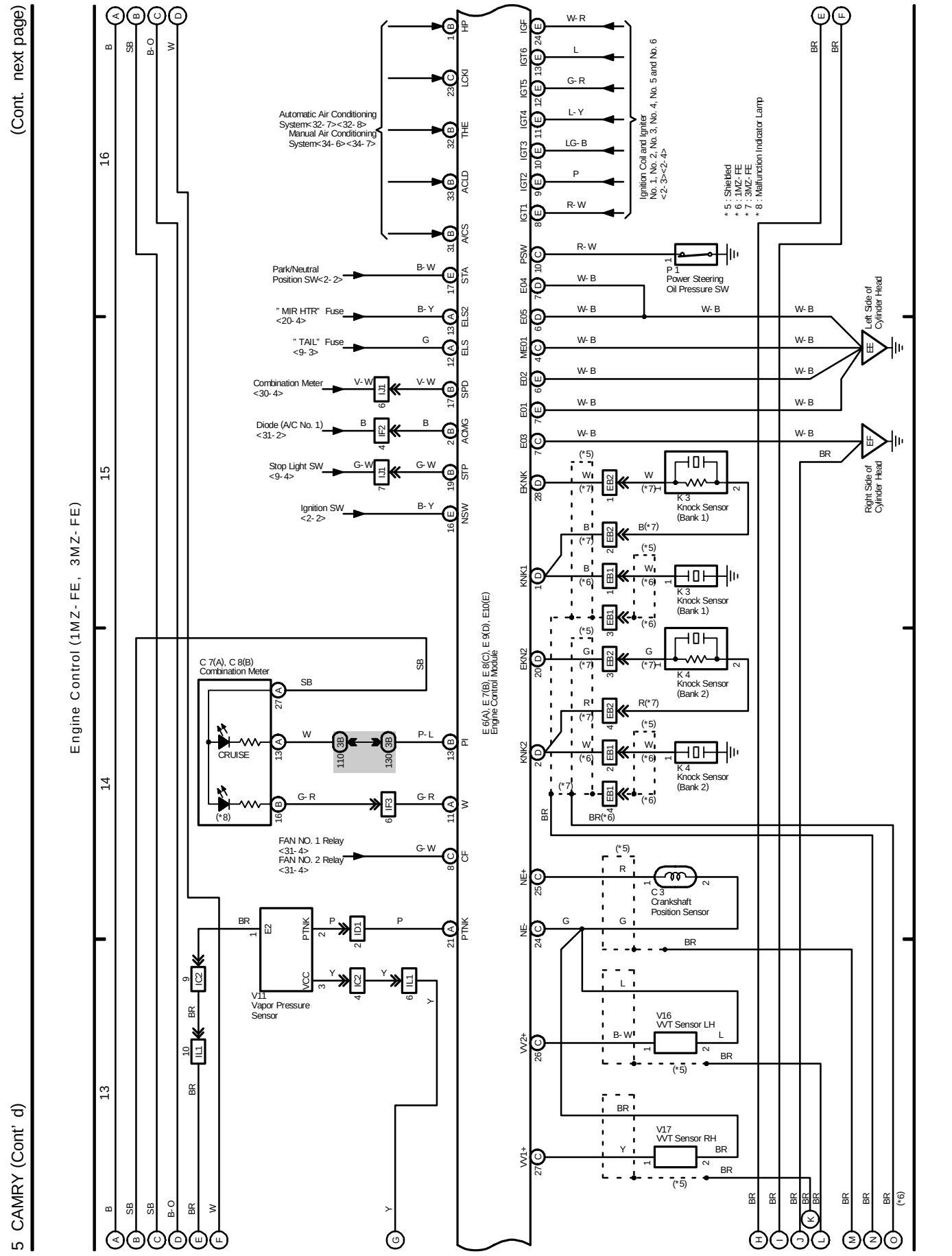

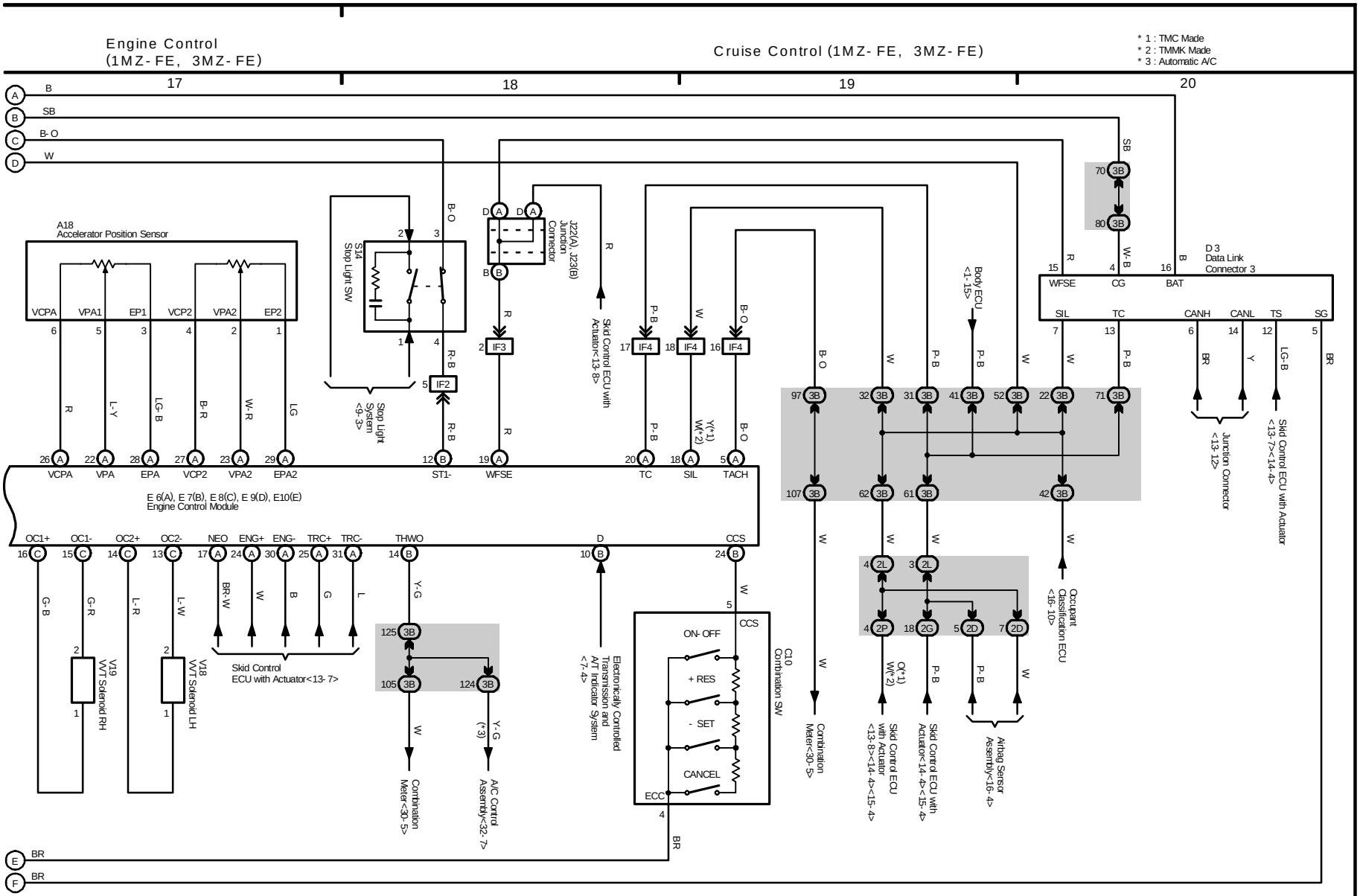
Engine Control
(1MZ-FE, 3MZ-FE)
Cruise Control (1MZ-FE, 3MZ-FE)
* 1 : TMC Made
* 2 : TMMK Made
* 3 : Automatic A/C
17
18
19
20
A18
Accelerator Position Sensor
VCPA
VPA1
EP1
VCP2
VPA2
EP2
S14
Stop Light SW
Stop Light System <9-3>
J22(A), J23(B)
Junction Connector
Skid Control ECU with Actuator<13-8>
IF2
IF3
IF4
Body ECU <1-15>
D 3
Data Link Connector 3
WFSE
CG
BAT
SIL
TC
CANH
CANL
TS
SG
Junction Connector <13-12>
Skid Control ECU with Actuator <13-7><14-4>
E 6(A), E 7(B), E 8(C), E 9(D), E10(E)
Engine Control Module
VCPA
VPA
EPA
VCP2
VPA2
EPA2
ST1-
WFSE
TC
SIL
TACH
OC1+
OC1-
OC2+
OC2-
NEO
ENG+
ENG-
TRC+
TRC-
THWO
D
CCS
V19
VVT Solenoid RH
V18
VVT Solenoid LH
Skid Control
ECU with Actuator<13-7>
Combination
Meter<30-5>
A/C Contrd
Assembly<32-7>
Electronically Controlled
Transmission and
A/T Indicator System
<7-4>
C10
Combination SW
ON-OFF
+ RES
- SET
CANCEL
ECC
Combination
Meter<30-5>
Occupant
Classification ECU
<16-10>
Skid Control ECU
with Actuator
<13-8><14-4><15-4>
Skid Control ECU with
Actuator<14-4><15-4>
Airbag Sensor
Assembly<16-4>

(Cont. next page)

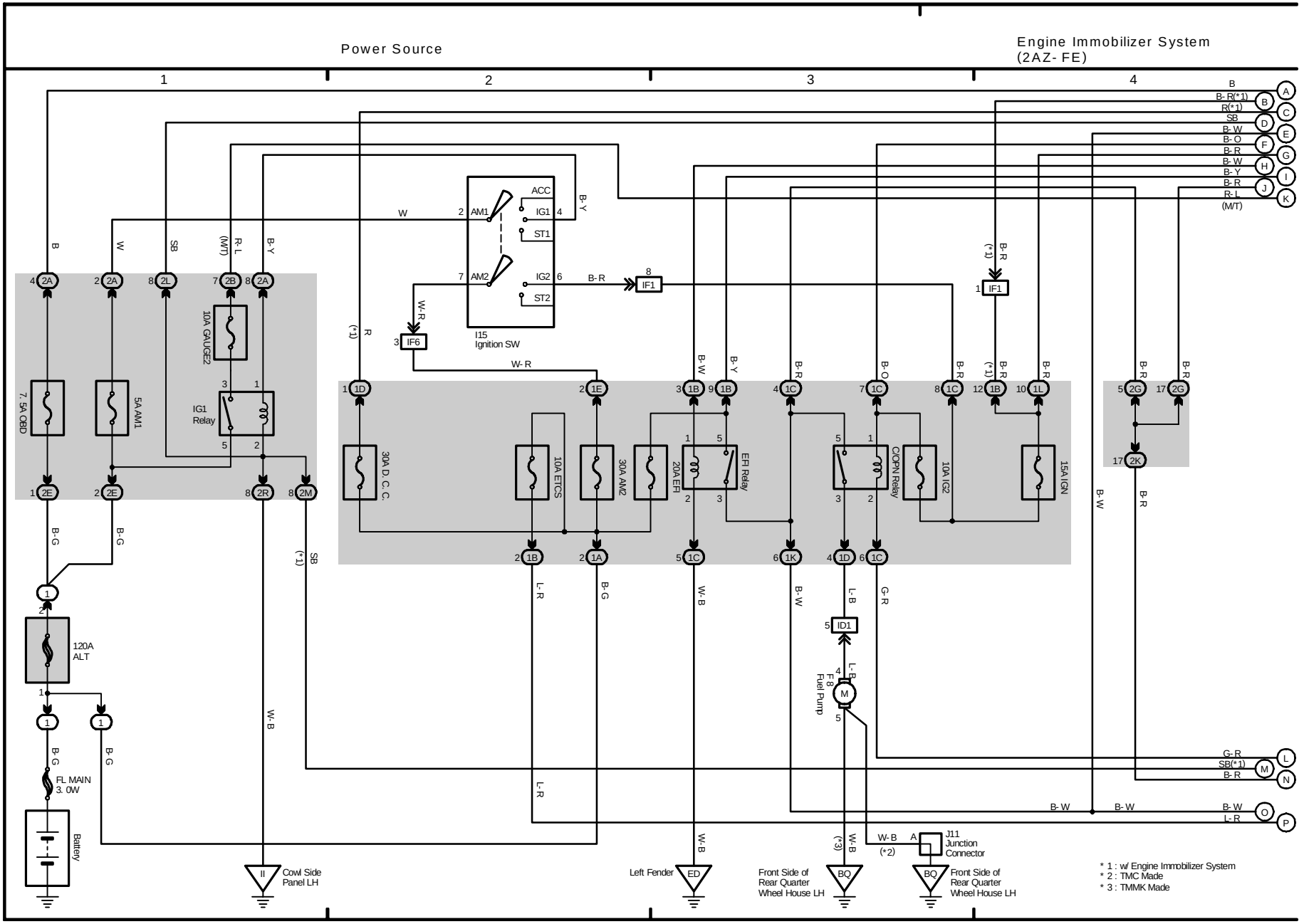

(Cont. next page)

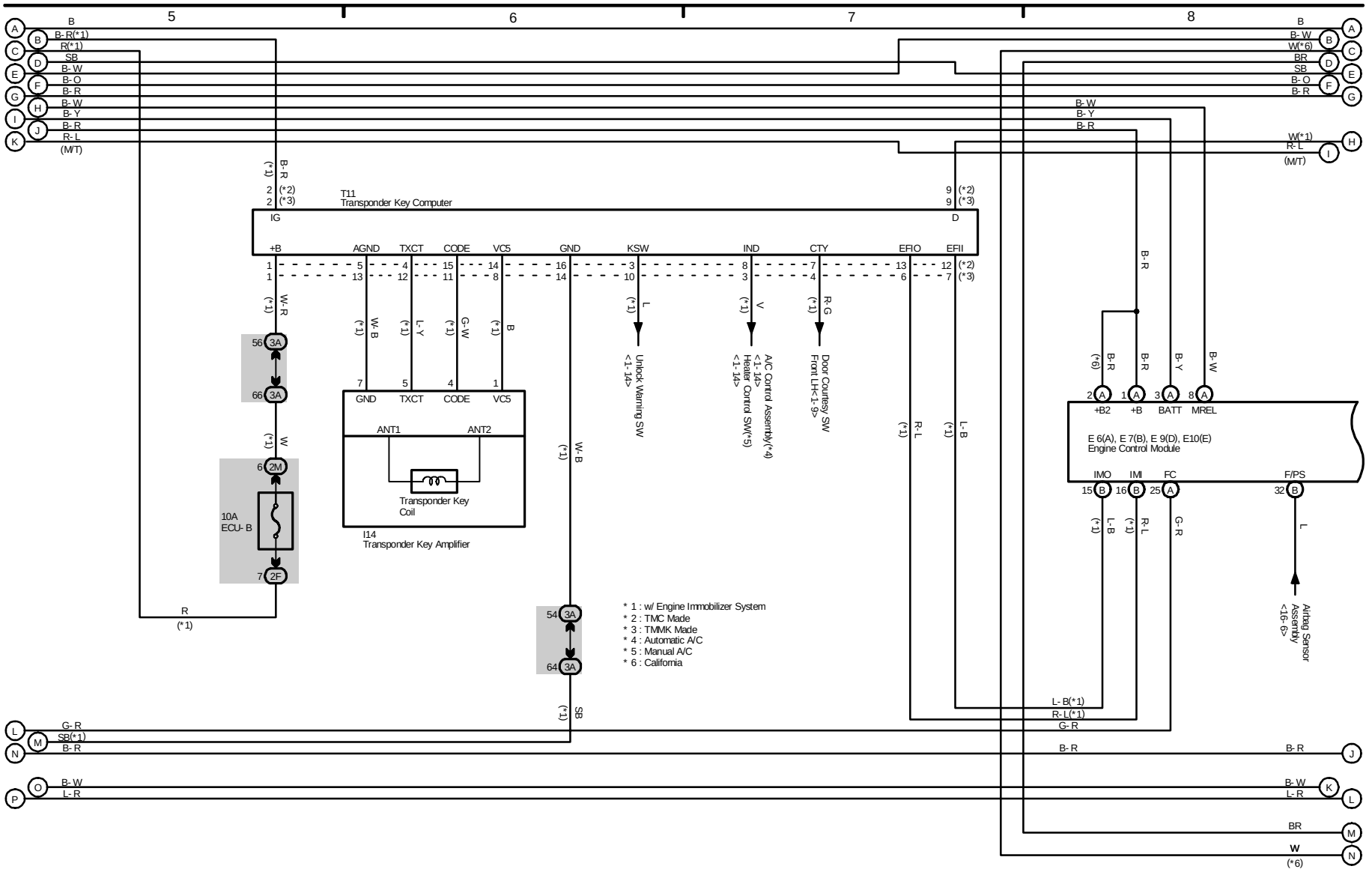

# M OVERALL ELECTRICAL WIRING DIAGRAM

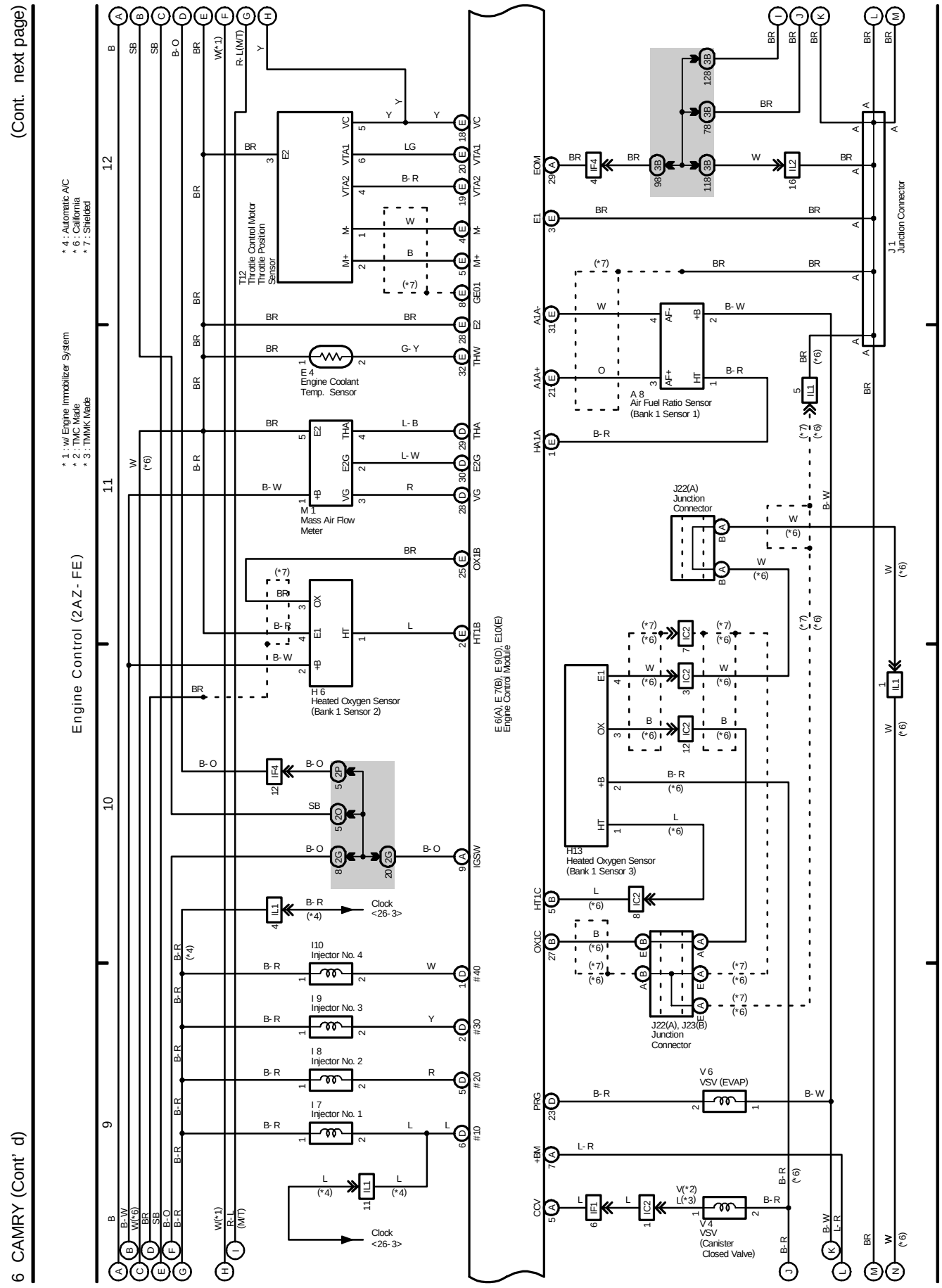

(Cont. next page)

## Engine Control (2AZ-FE)

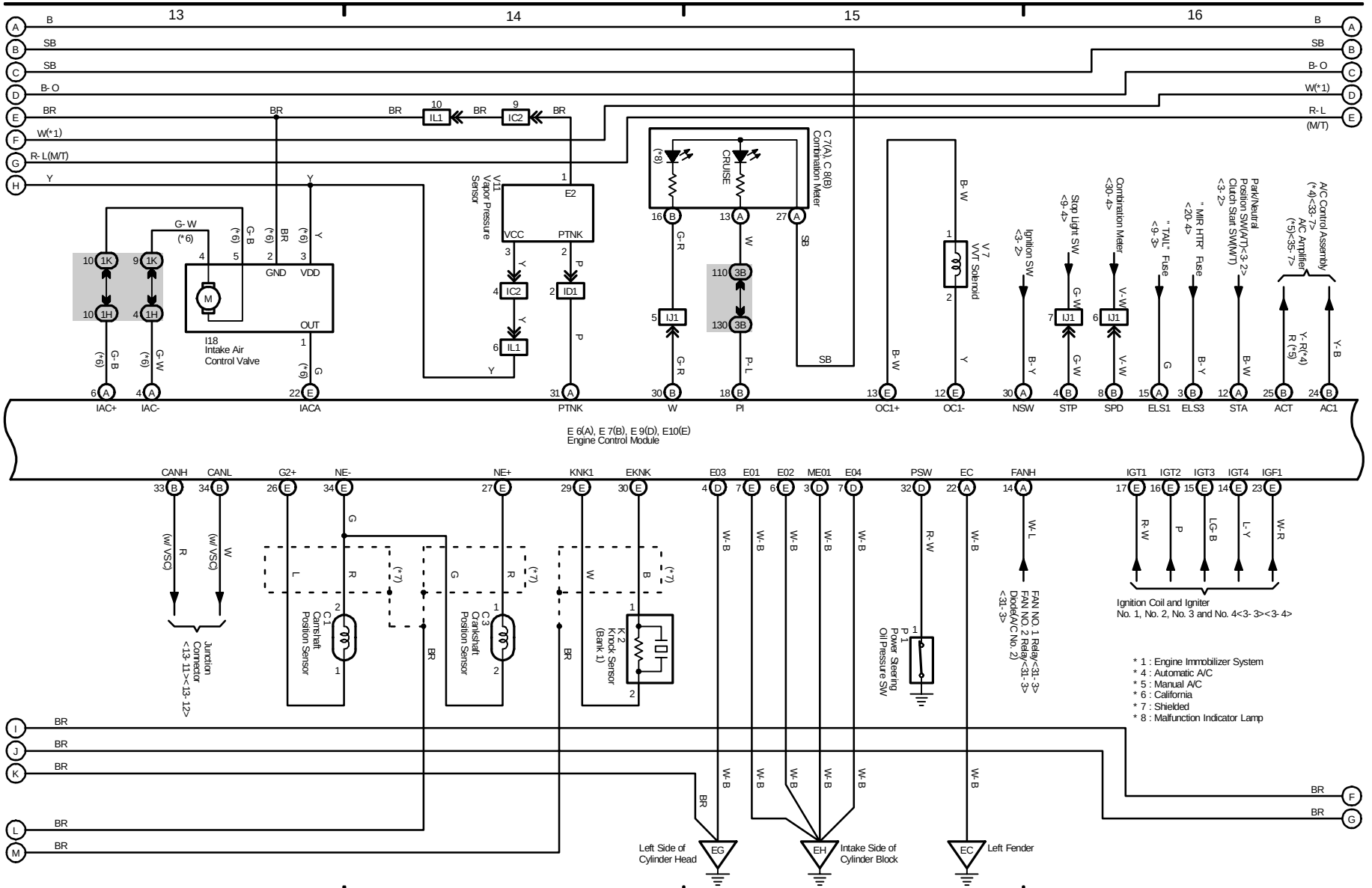

# M OVERALL ELECTRICAL WIRING DIAGRAM

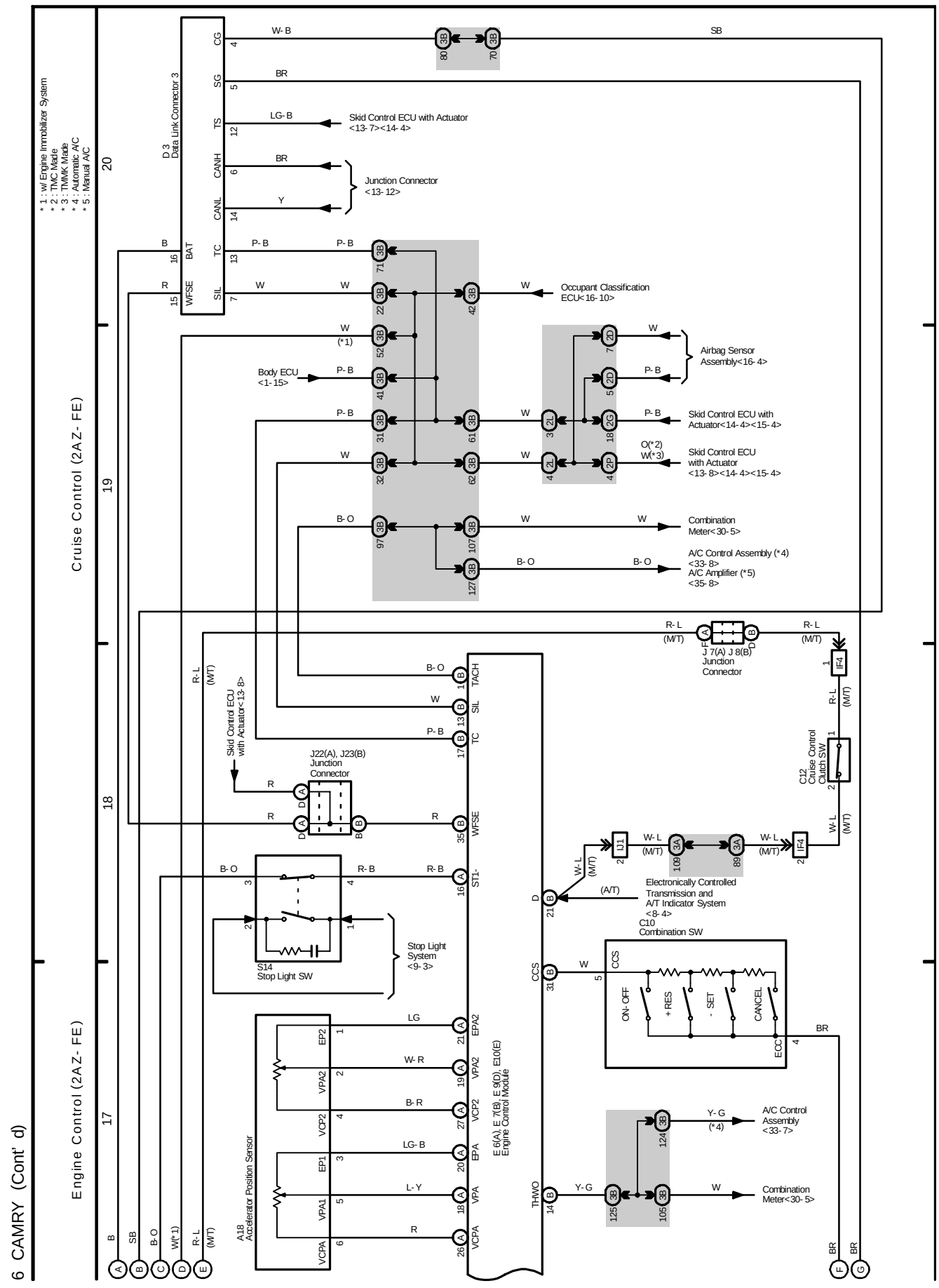

# M OVERALL ELECTRICAL WIRING DIAGRAM

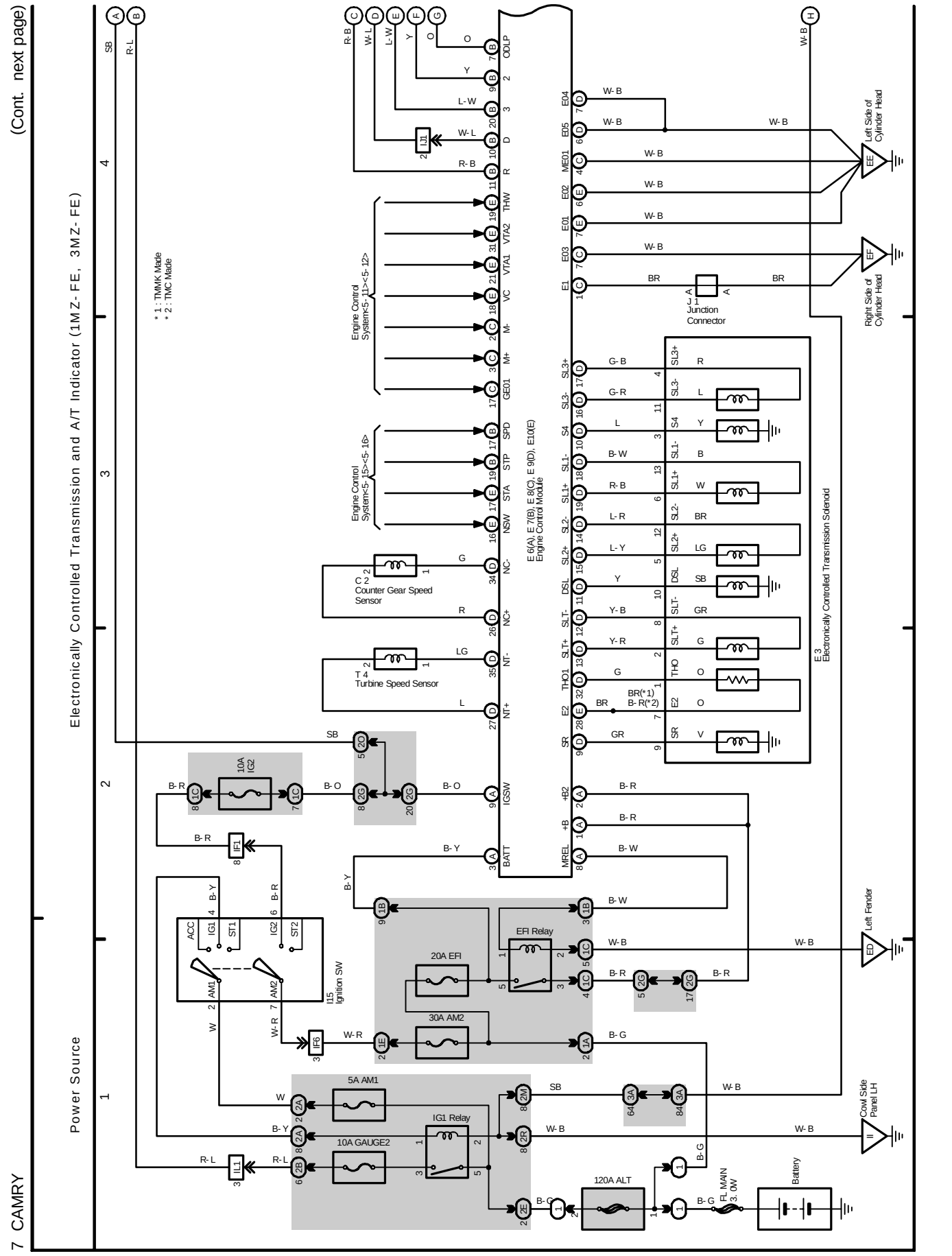

## Electronically Controlled Transmission and A/T Indicator (1MZ-FE, 3MZ-FE)

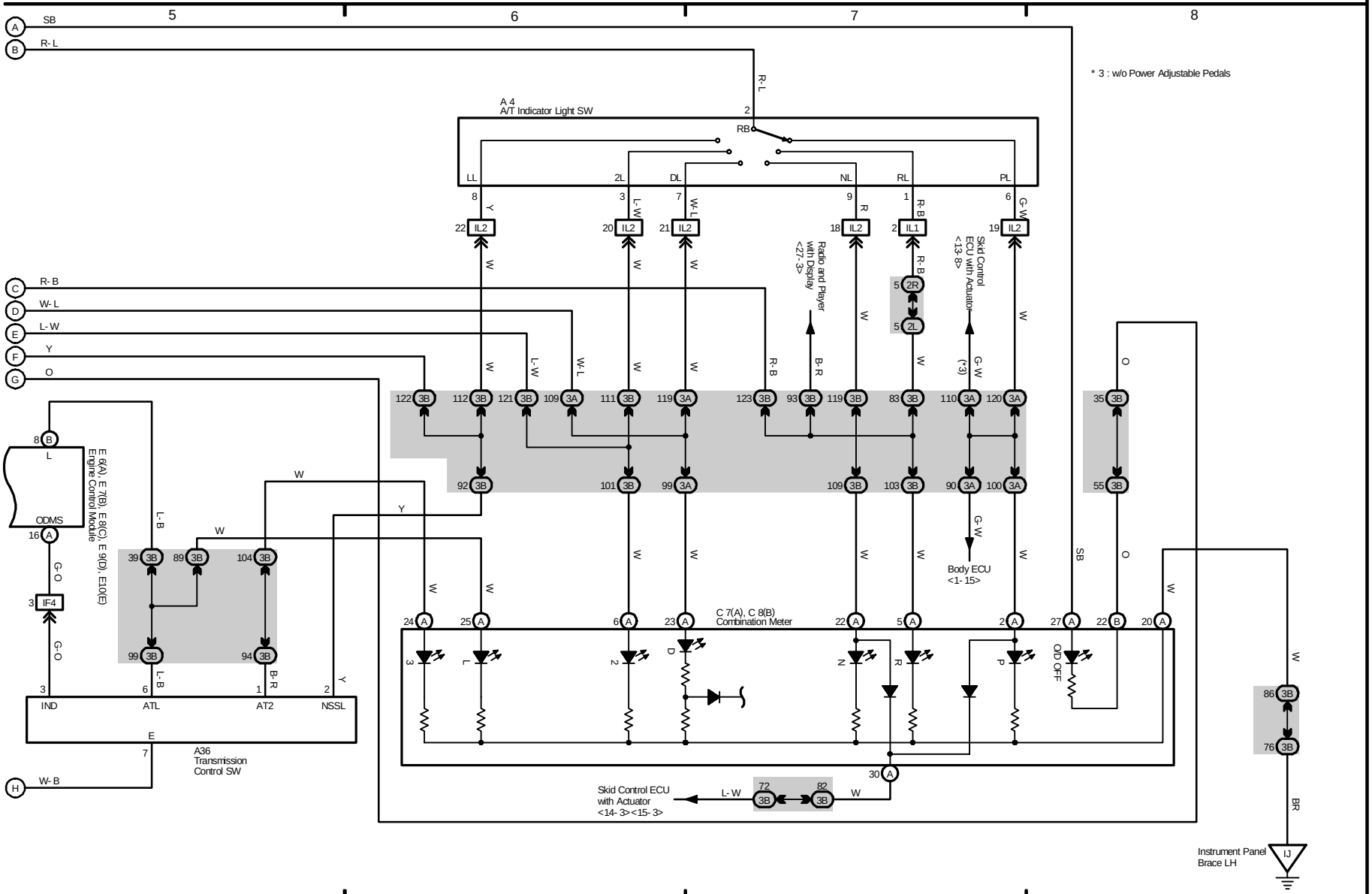

# M OVERALL ELECTRICAL WIRING DIAGRAM

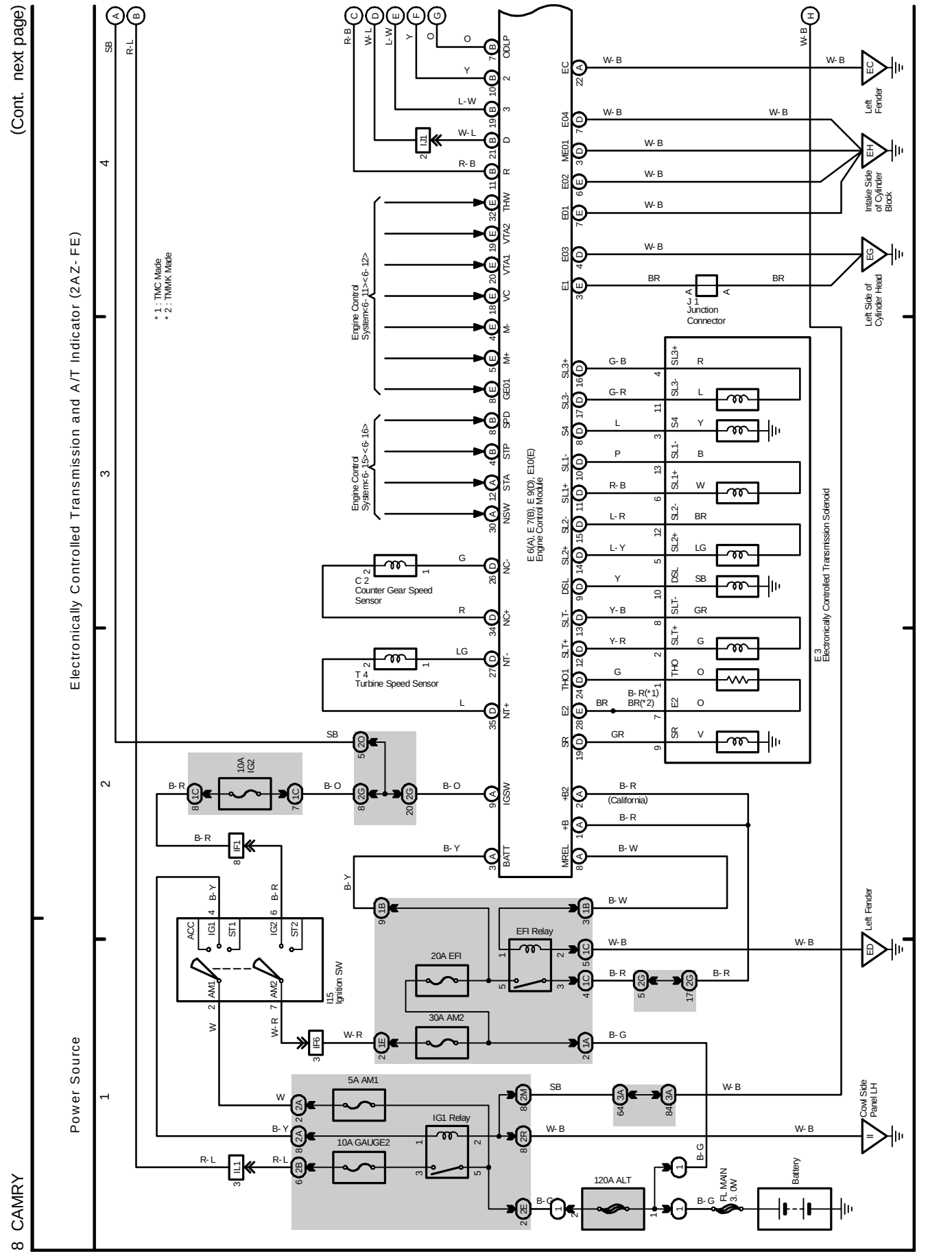

## Electronically Controlled Transmission and A/T Indicator (2AZ-FE)

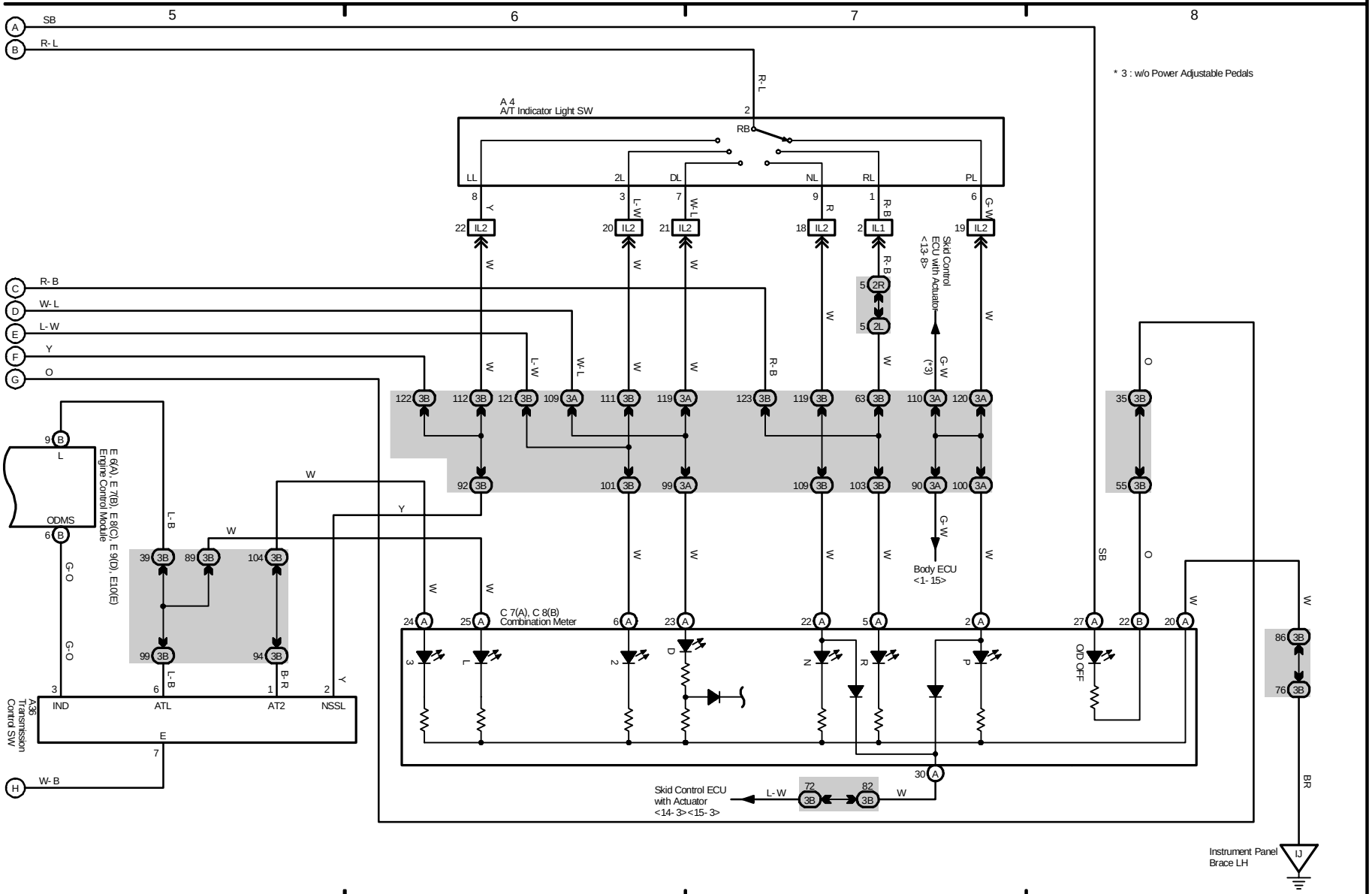

# M OVERALL ELECTRICAL WIRING DIAGRAM

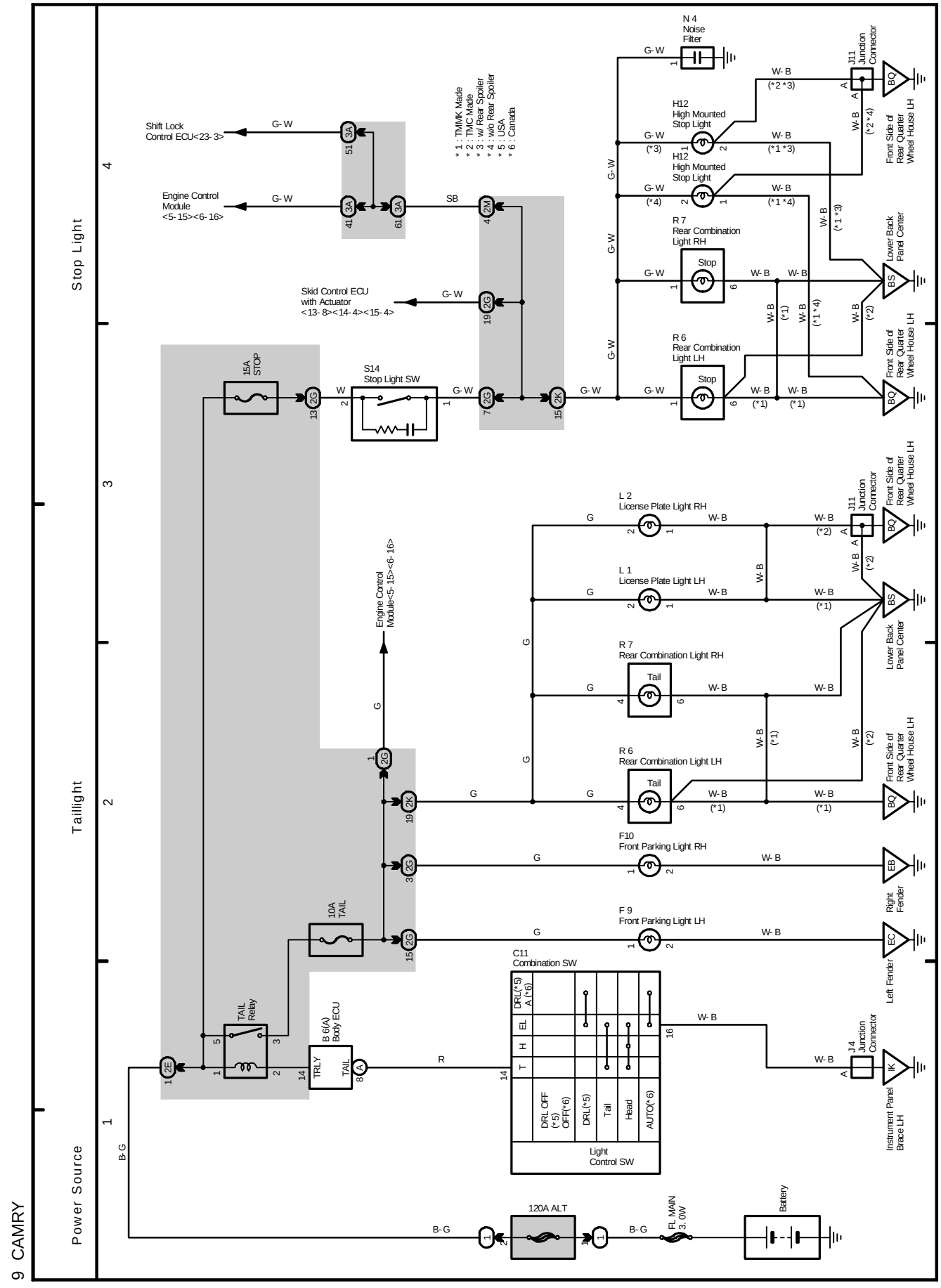

# M OVERALL ELECTRICAL WIRING DIAGRAM

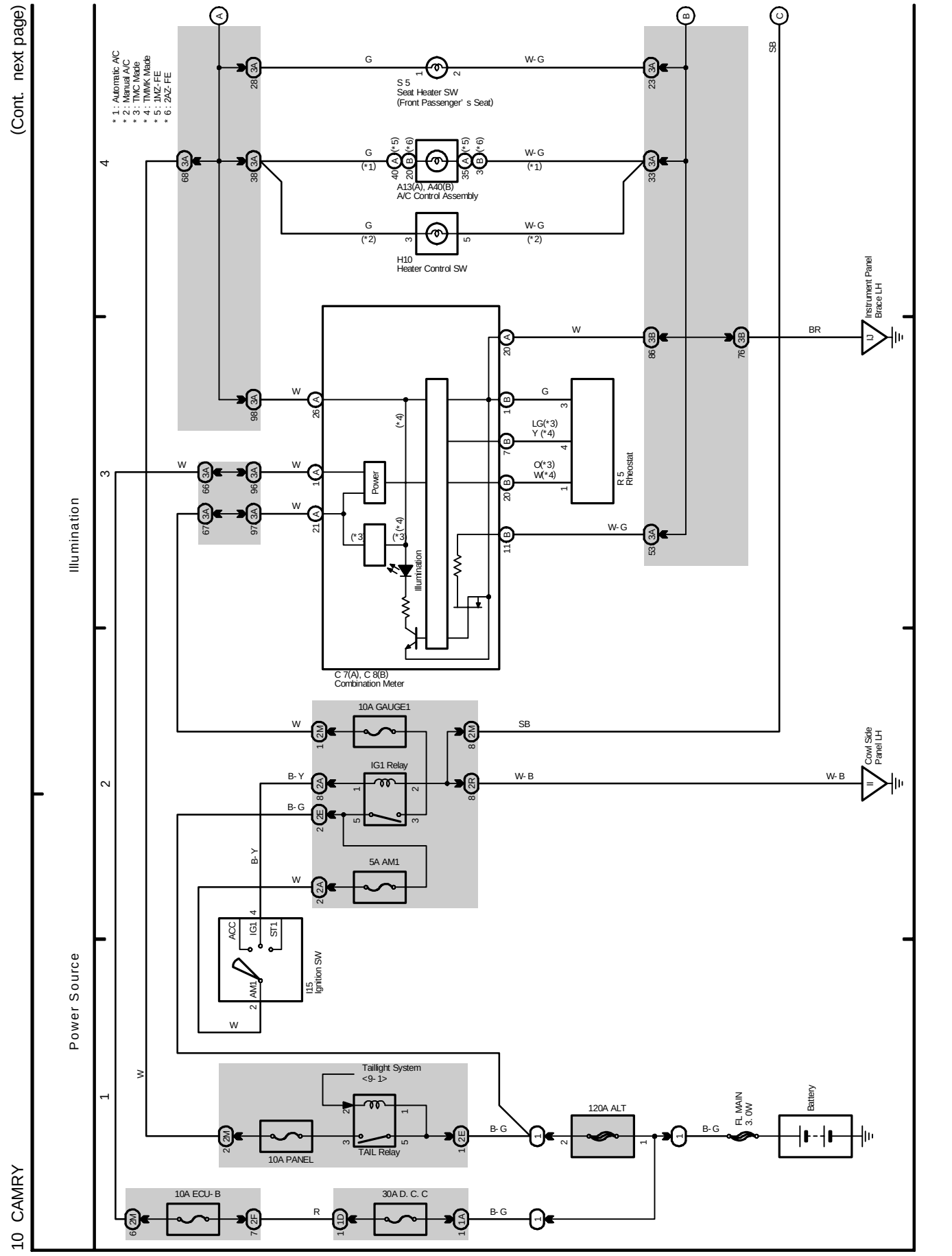

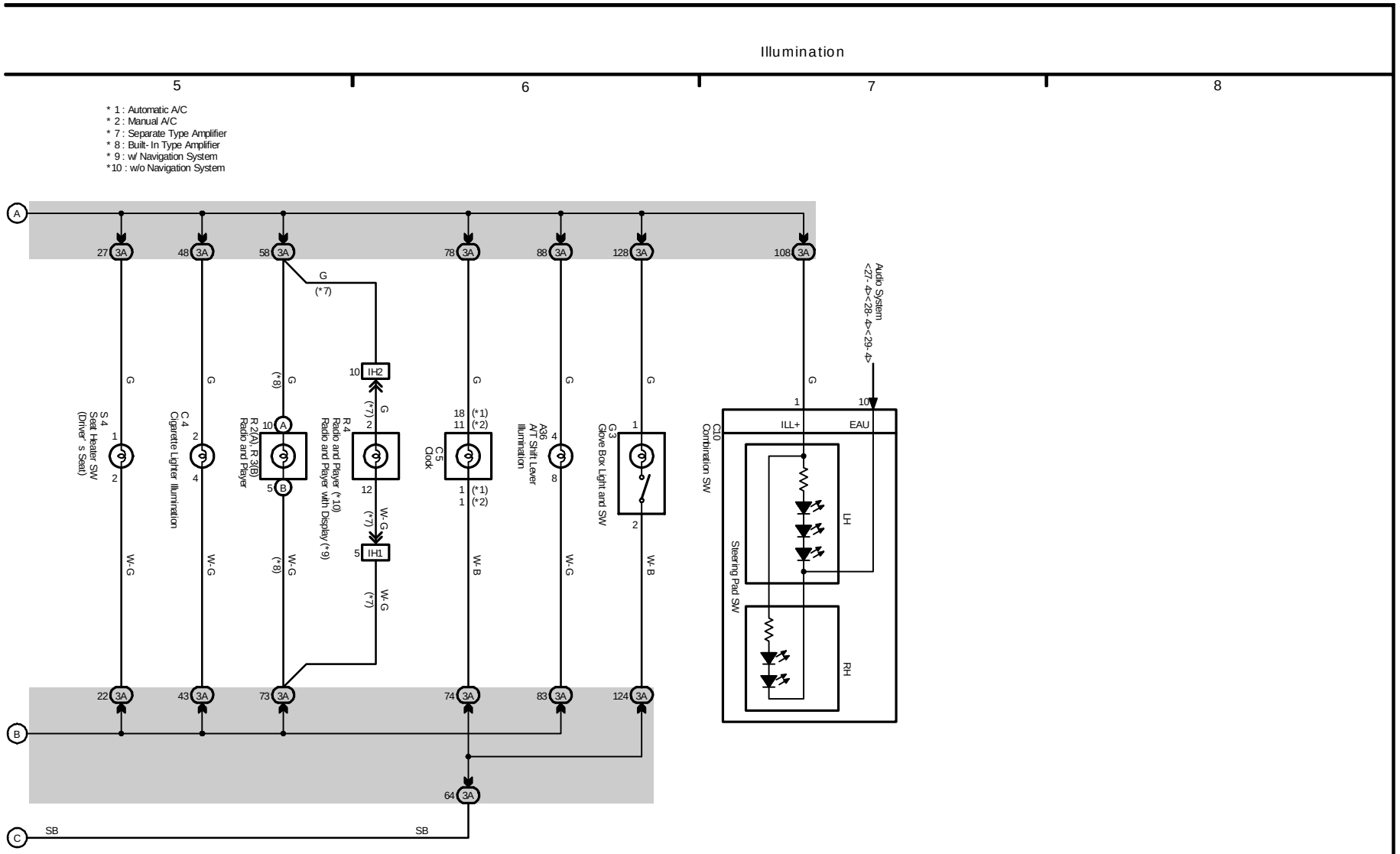
Illumination
5
6
7
8
* 1 : Automatic A/C
* 2 : Manual A/C
* 7 : Separate Type Amplifier
* 8 : Built- In Type Amplifier
* 9 : w/ Navigation System
*10 : w/o Navigation System
A
B
C
27 3A
48 3A
58 3A
78 3A
88 3A
128 3A
108 3A
22 3A
43 3A
73 3A
74 3A
83 3A
124 3A
64 3A
G
(*7)
(*8)
W-G
W-B
SB
10 IH2
5 IH1
S 4 Seat Heater SW (Driver's Seat)
C 4 Cigarette Lighter Illumination
R 2(A), R 3(B) Radio and Player
R 4 Radio and Player (*10) Radio and Player with Display (*9)
C 5 Clock
A35 A/T Shift Lever Illumination
G 3 Glove Box Light and SW
CL10 Combination SW
Audio System <27- 4><28- 4><29- 4>
ILL+
EAU
LH
RH
Steering Pad SW

# M OVERALL ELECTRICAL WIRING DIAGRAM

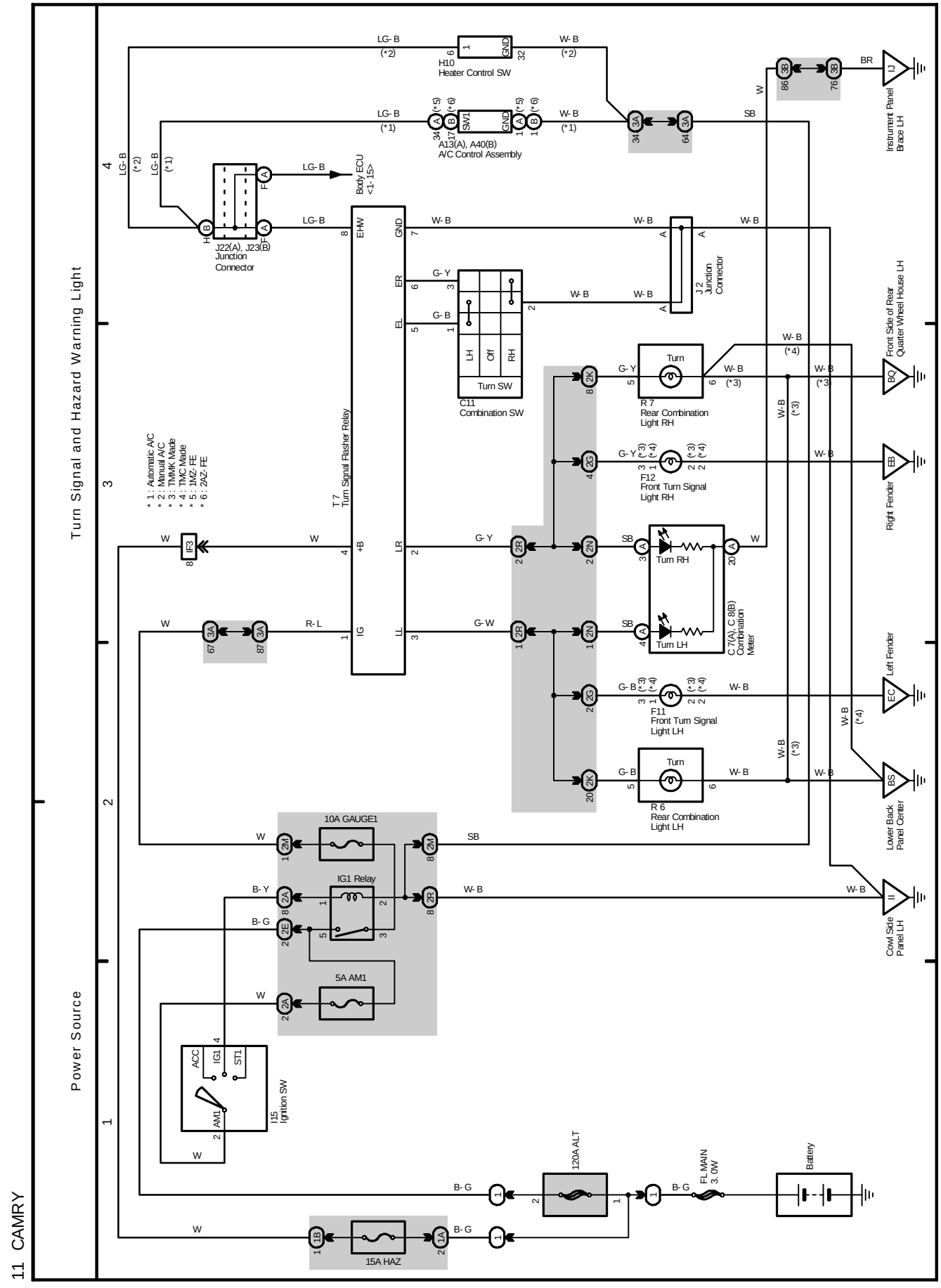

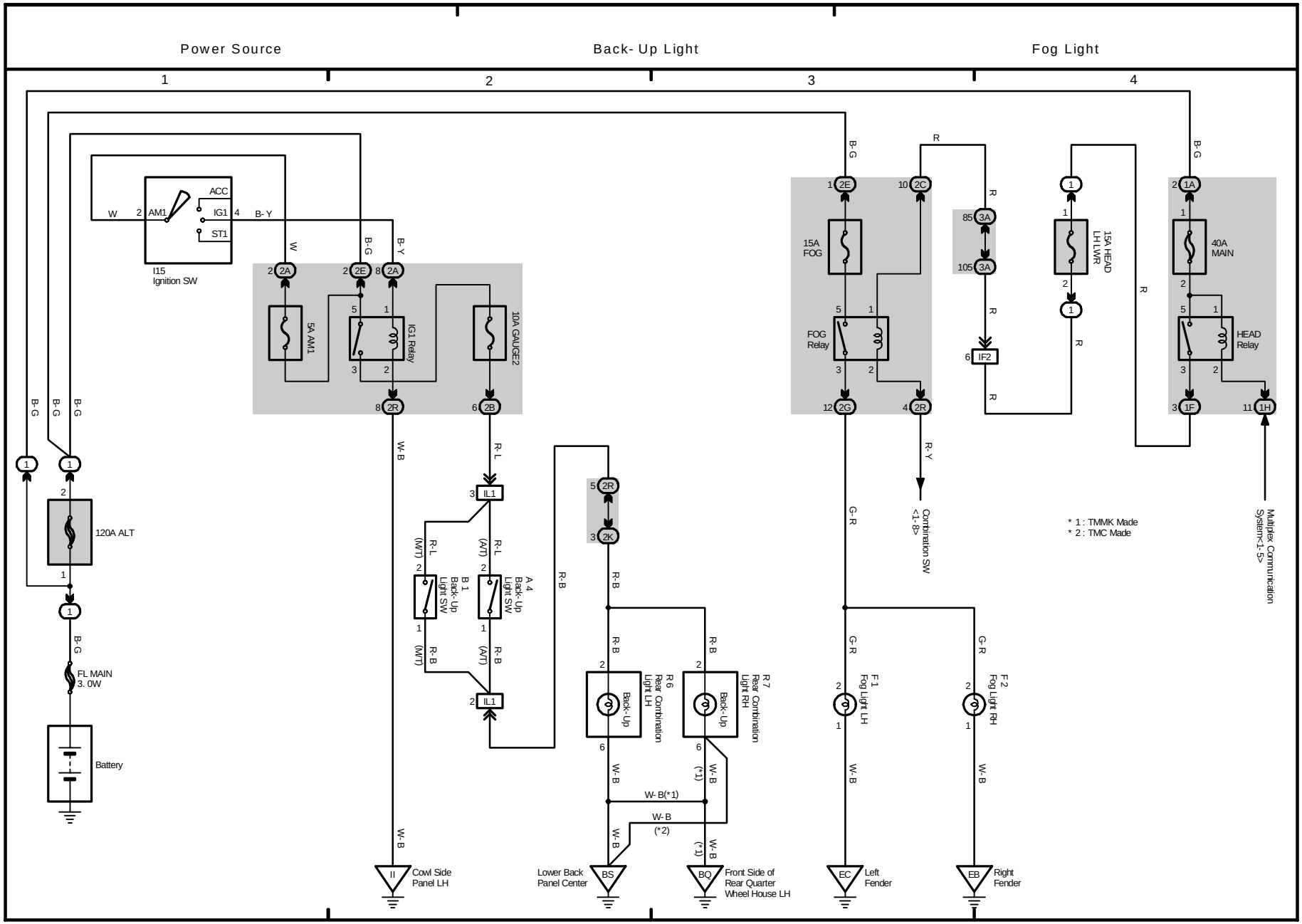
Power Source
Back- Up Light
Fog Light
1
2
3
4
ACC
IG1
ST1
AM1
W
B- Y
I15
Ignition SW
5A AM1
IG1 Relay
10A GAUGE2
15A
FOG
FOG
Relay
IF2
15A HEAD
LH LWR
40A
MAIN
HEAD
Relay
120A ALT
FL MAIN
3. 0W
Battery
B- G
R
R- Y
G- R
W- B
R- L
R- B
W- B(*1)
W- B
(*2)
(*1)
IL1
(M/T)
(A/T)
B 1
Back- Up
Light SW
A 4
Back- Up
Light SW
R 6
Rear Combination
Light LH
R 7
Rear Combination
Light RH
Back- Up
F 1
Fog Light LH
F 2
Fog Light RH
Combination SW
<1- 8>
Multiplex Communication
System<1- 5>
* 1 : TMMK Made
* 2 : TMC Made
Cowl Side
Panel LH
Lower Back
Panel Center
Front Side of
Rear Quarter
Wheel House LH
Left
Fender
Right
Fender

# M OVERALL ELECTRICAL WIRING DIAGRAM

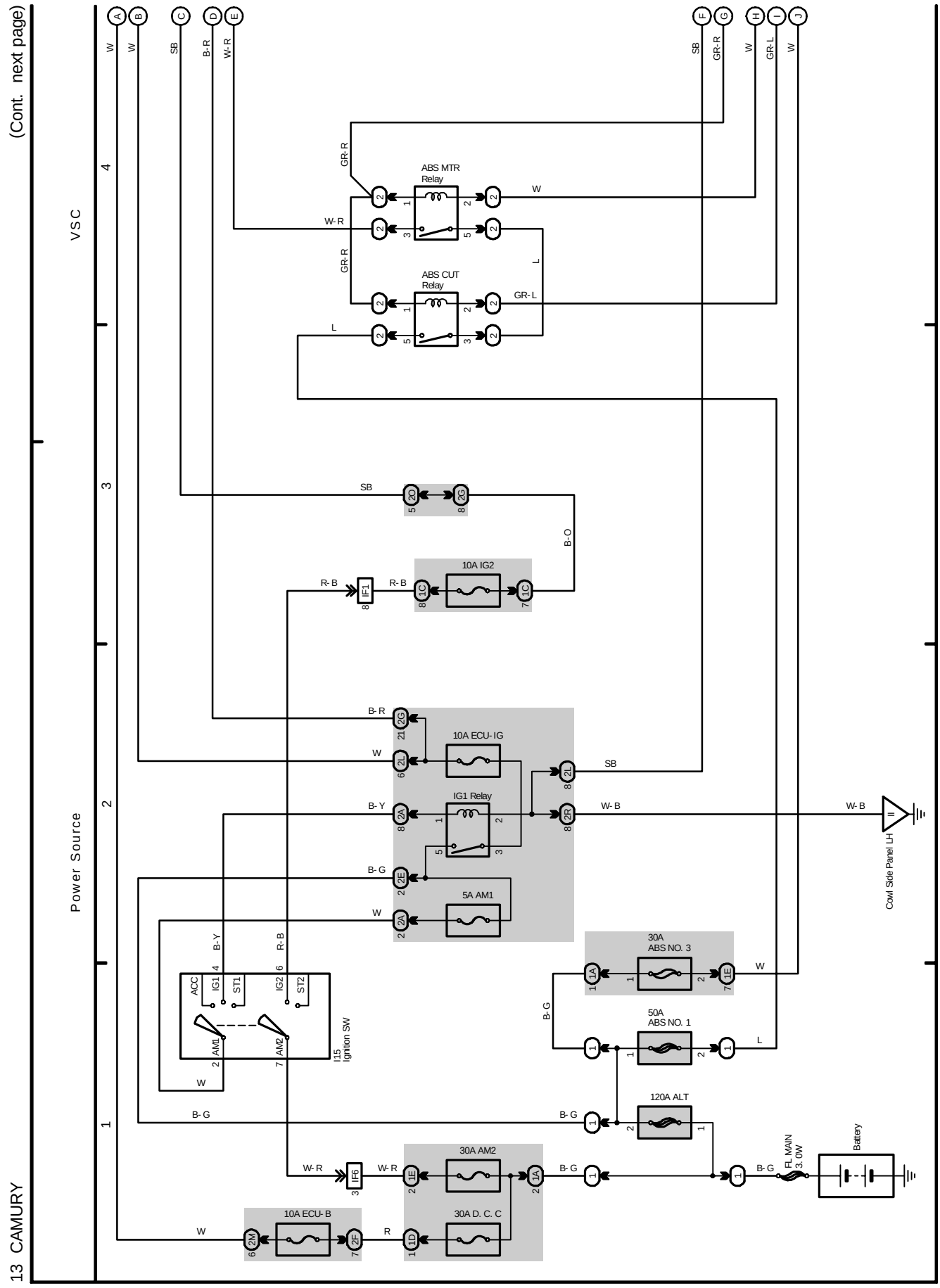

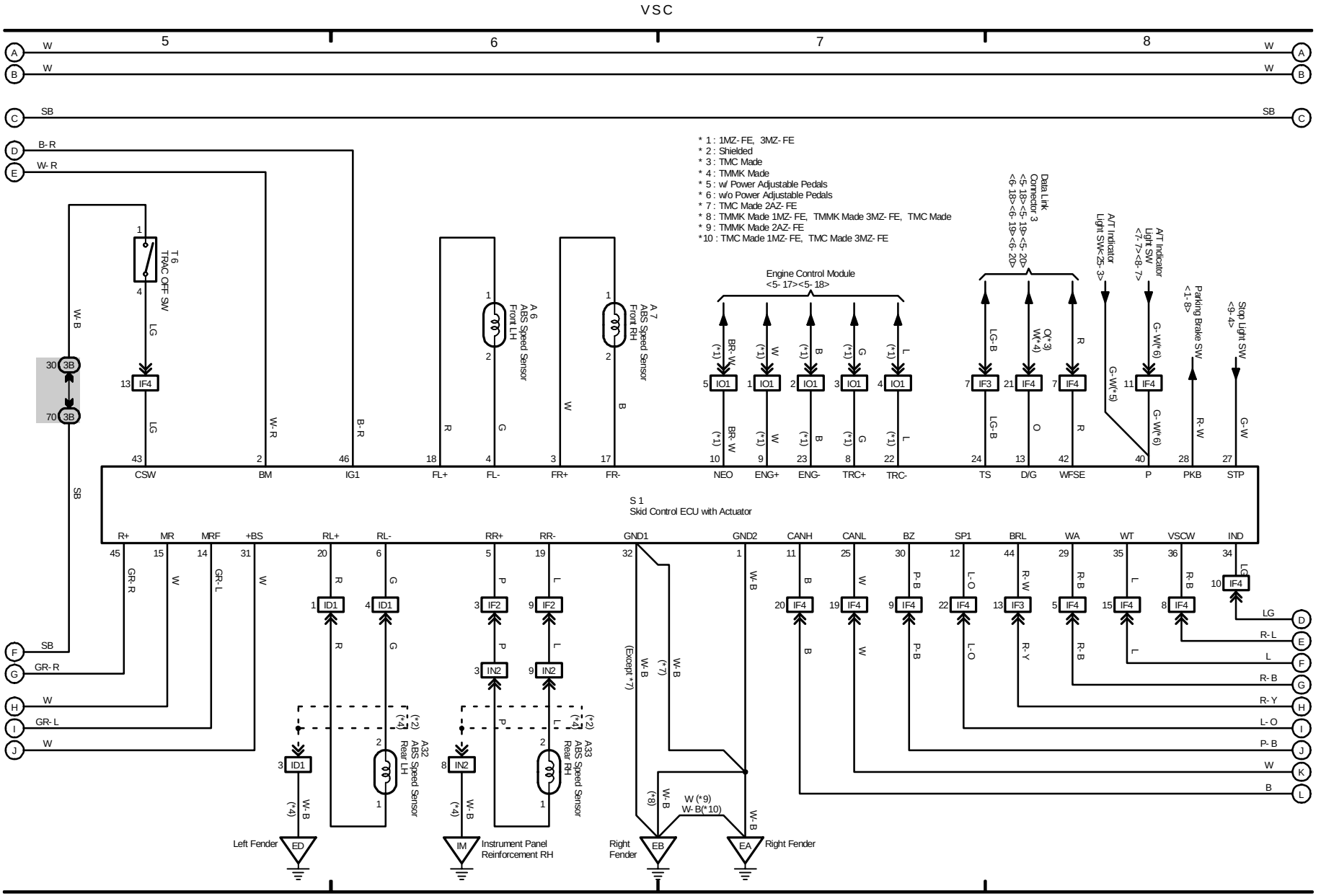
VSC
5
6
7
8
* 1 : 1MZ- FE, 3MZ- FE
* 2 : Shielded
* 3 : TMC Made
* 4 : TMMK Made
* 5 : w/ Power Adjustable Pedals
* 6 : w/o Power Adjustable Pedals
* 7 : TMC Made 2AZ- FE
* 8 : TMMK Made 1MZ- FE, TMMK Made 3MZ- FE, TMC Made
* 9 : TMMK Made 2AZ- FE
*10 : TMC Made 1MZ- FE, TMC Made 3MZ- FE
Engine Control Module
<5- 17><5- 18>
Data Link Connector 3
<5- 18><5- 19><5- 20>
<6- 18><6- 19><6- 20>
A/T Indicator Light SW<25- 3>
A/T Indicator Light SW<7- 7><8- 7>
Parking Brake SW<1- 8>
Stop Light SW<9- 4>
T 6
TRAC OFF SW
A 6
ABS Speed Sensor Front LH
A 7
ABS Speed Sensor Front RH
S 1
Skid Control ECU with Actuator
CSW
BM
IG1
FL+
FL-
FR+
FR-
NEO
ENG+
ENG-
TRC+
TRC-
TS
D/G
WFSE
P
PKB
STP
R+
MR
MRF
+BS
RL+
RL-
RR+
RR-
GND1
GND2
CANH
CANL
BZ
SP1
BRL
WA
WT
VSCW
IND
A32
ABS Speed Sensor Rear LH
A33
ABS Speed Sensor Rear RH
Left Fender
Instrument Panel Reinforcement RH
Right Fender
Right Fender
(Except *7)
W (*9)
W- B(*10)

# M OVERALL ELECTRICAL WIRING DIAGRAM

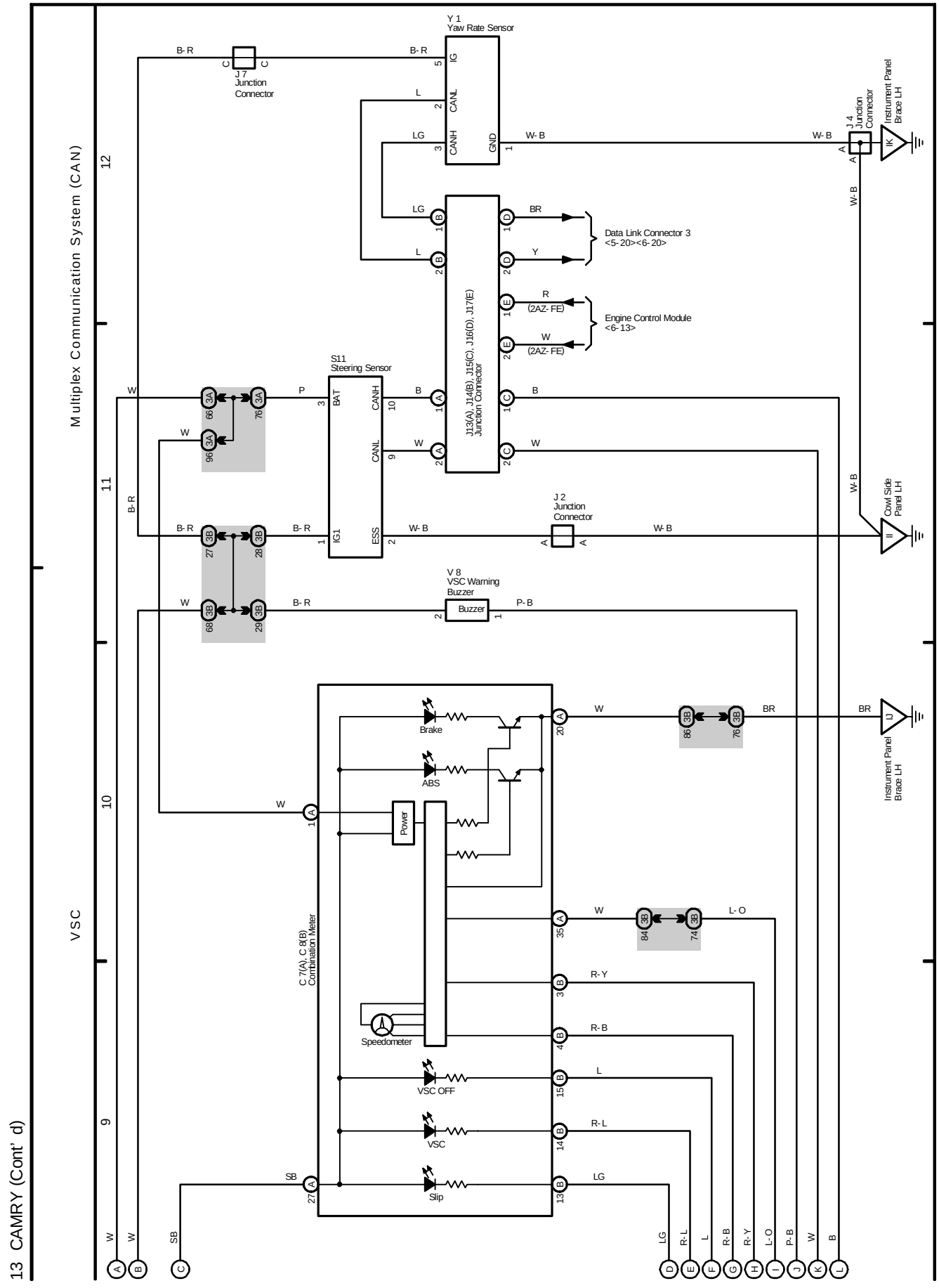

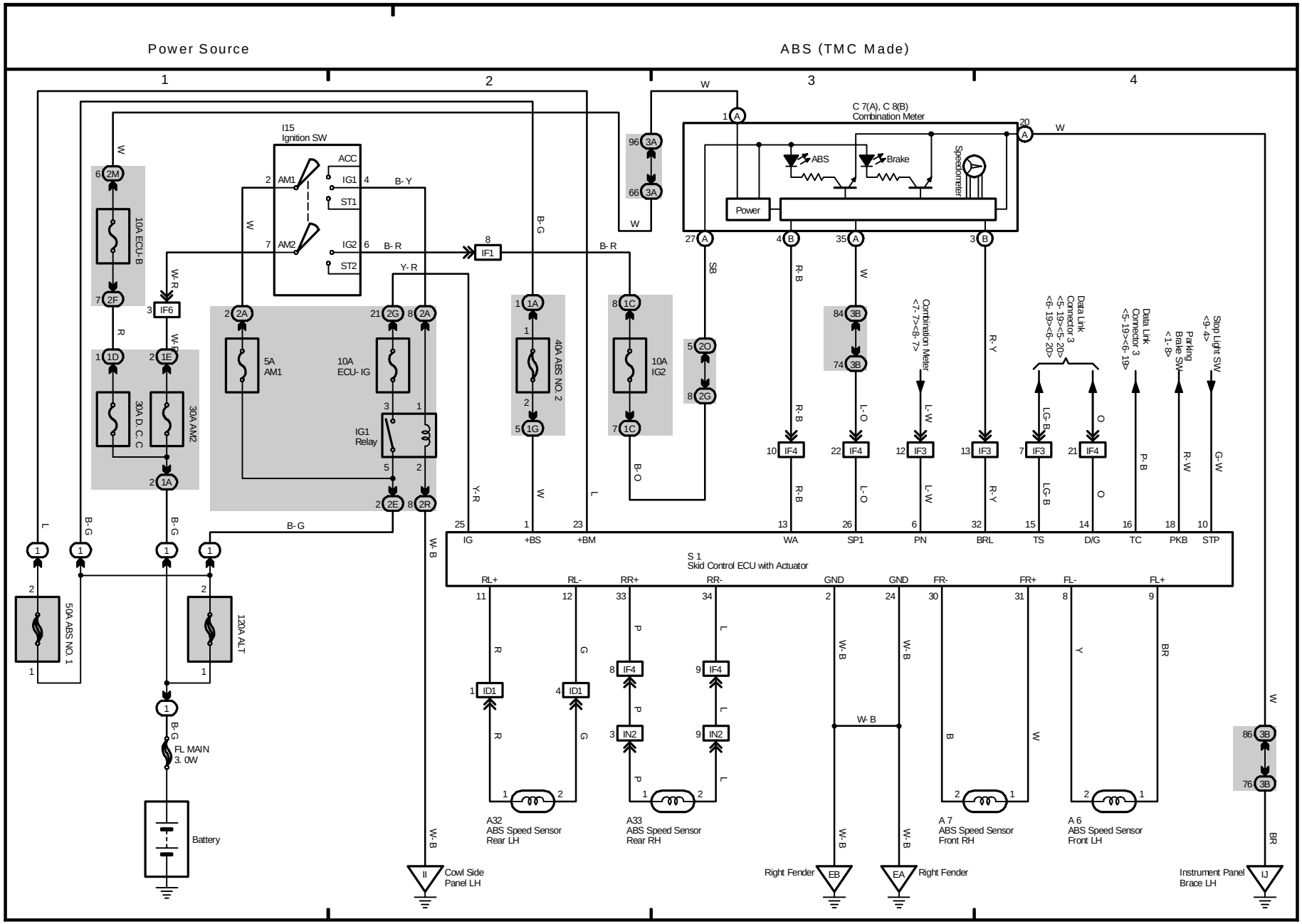
Power Source
ABS (TMC Made)
1
2
3
4
I15
Ignition SW
ACC
IG1
ST1
IG2
ST2
AM1
AM2
B- Y
B- R
Y- R
W
B- G
L
W- B
W- R
R
R- B
L- O
L- W
R- Y
LG- B
O
P- B
R- W
G- W
SB
BR
Y
P
G
10A ECU- B
5A AM1
10A ECU- IG
40A ABS NO. 2
10A IG2
IG1 Relay
30A D C C
30A AM2
50A ABS NO. 1
120A ALT
FL MAIN 3. 0W
Battery
C 7(A), C 8(B) Combination Meter
ABS
Brake
Speedometer
Power
Combination Meter <7- 7><8- 7>
Data Link Connector 3 <5- 19><5- 20><6- 19><6- 20>
Data Link Connector 3 <5- 19><6- 19>
Parking Brake SW <1- 8>
Stop Light SW <9- 4>
IG
+BS
+BM
WA
SP1
PN
BRL
TS
D/G
TC
PKB
STP
S 1
Skid Control ECU with Actuator
RL+
RL-
RR+
RR-
GND
GND
FR-
FR+
FL-
FL+
A32
ABS Speed Sensor
Rear LH
A33
ABS Speed Sensor
Rear RH
A 7
ABS Speed Sensor
Front RH
A 6
ABS Speed Sensor
Front LH
Cowl Side Panel LH
Right Fender
Right Fender
Instrument Panel Brace LH

# M OVERALL ELECTRICAL WIRING DIAGRAM

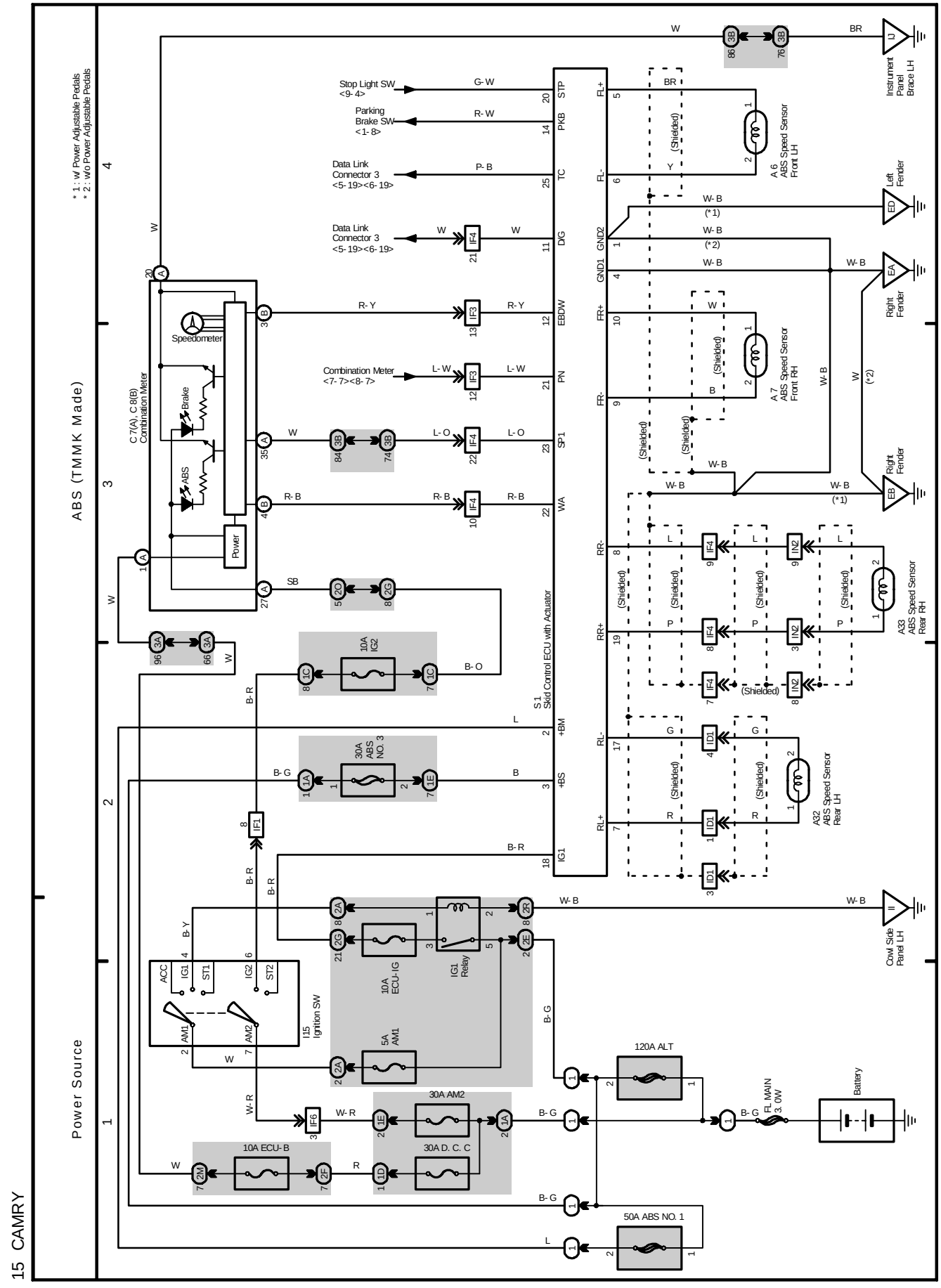

(Cont. next page)

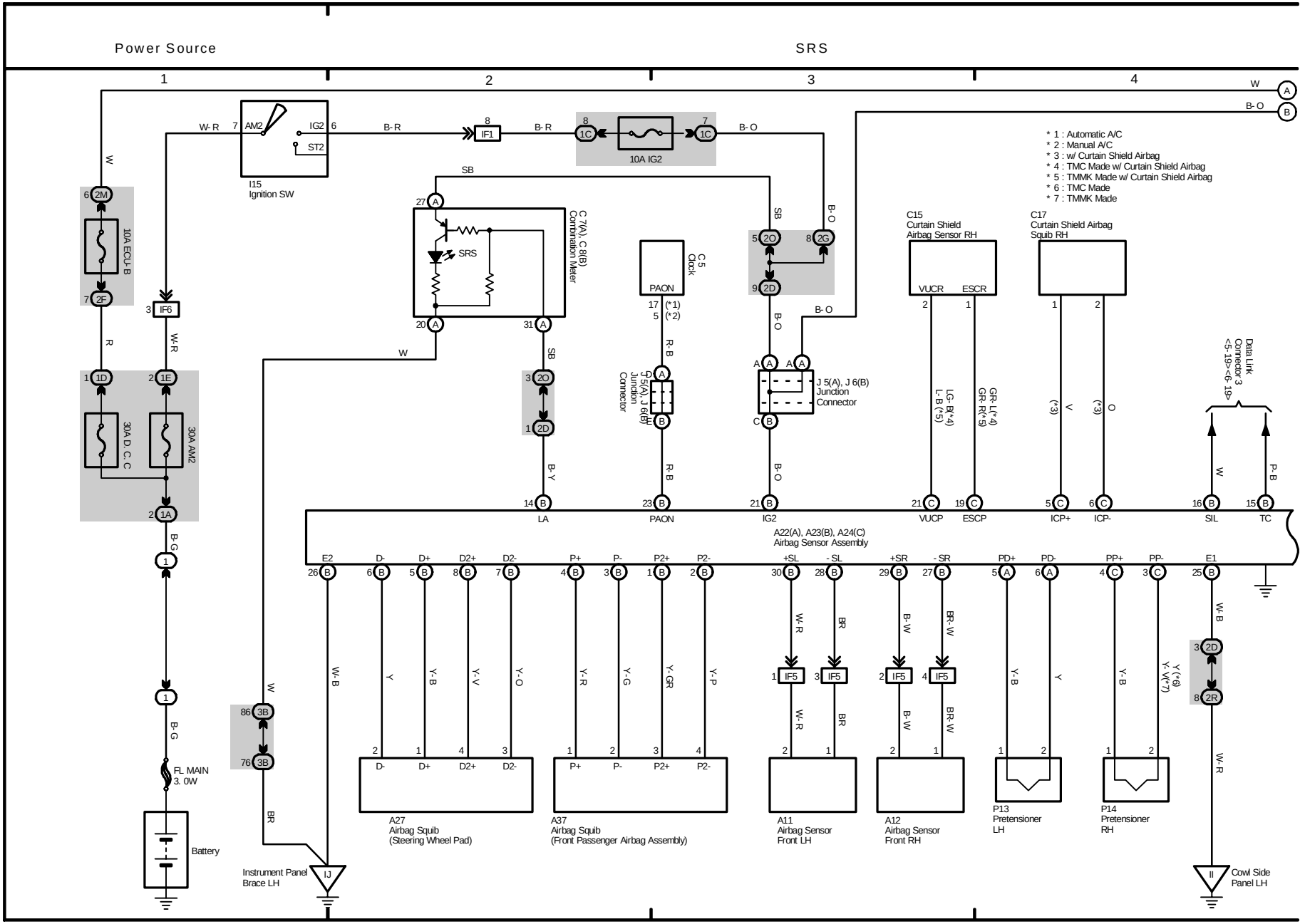

# M OVERALL ELECTRICAL WIRING DIAGRAM

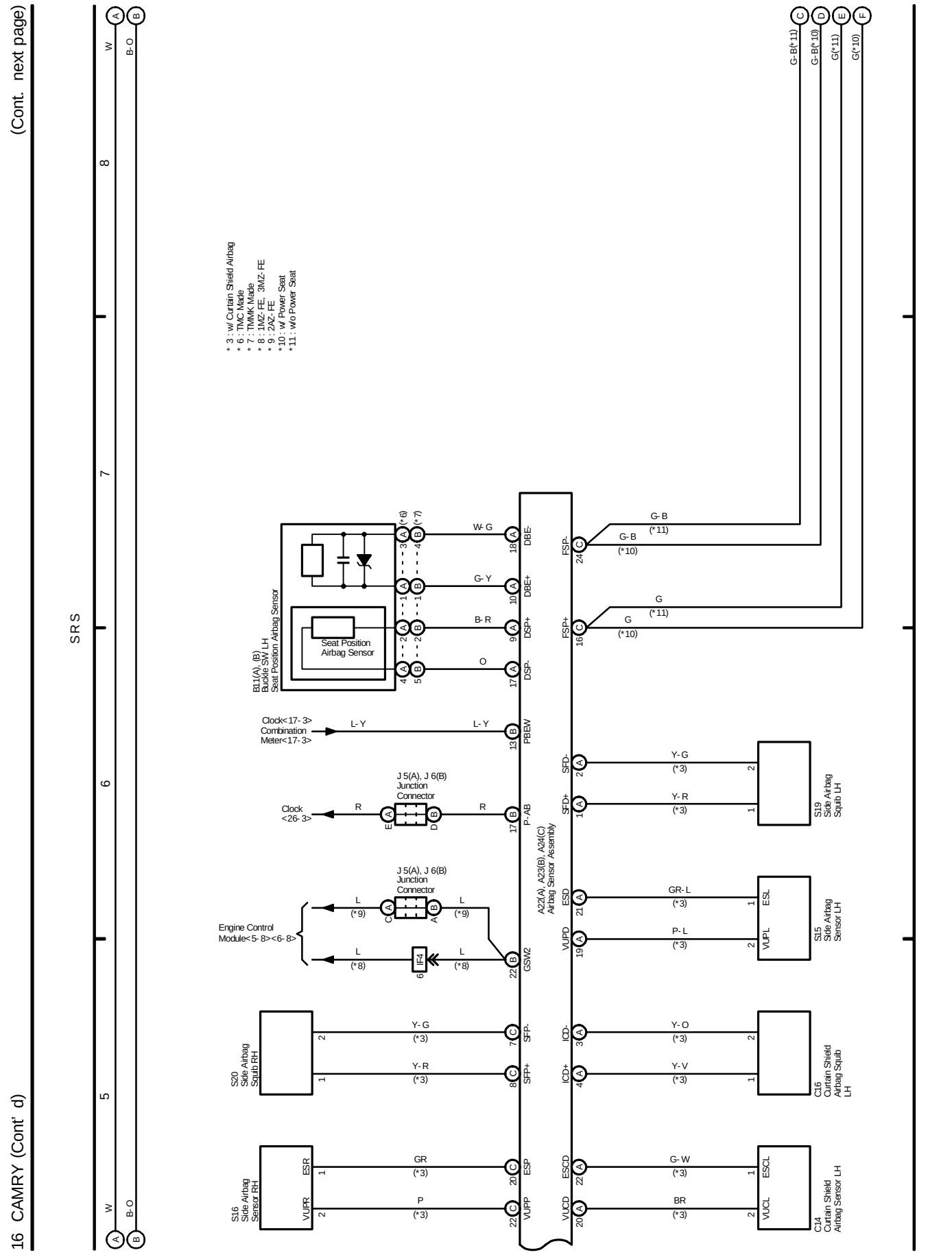

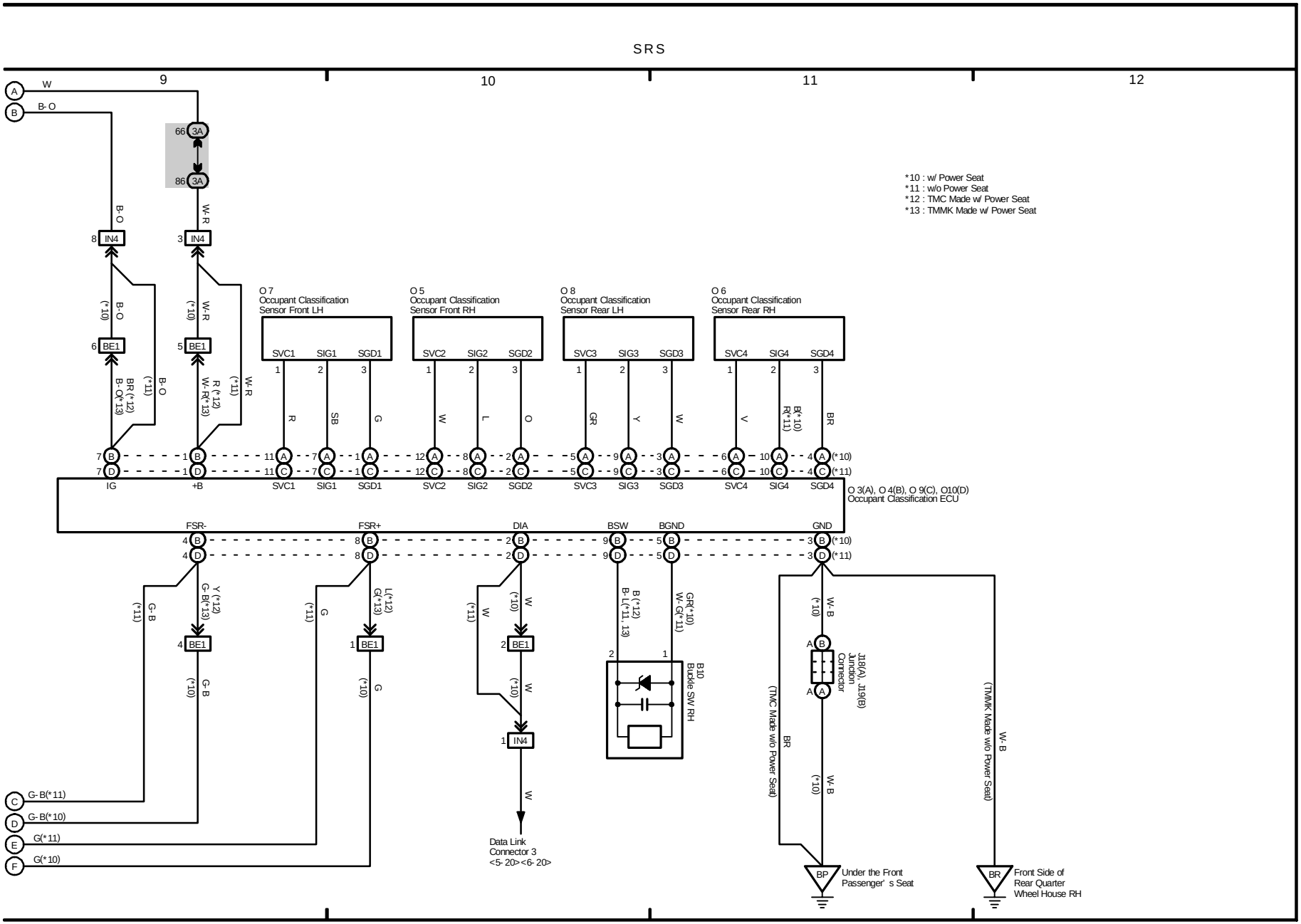
SRS
9
10
11
12
*10 : w/ Power Seat
*11 : w/o Power Seat
*12 : TMC Made w/ Power Seat
*13 : TMMK Made w/ Power Seat
O 7 Occupant Classification Sensor Front LH
O 5 Occupant Classification Sensor Front RH
O 8 Occupant Classification Sensor Rear LH
O 6 Occupant Classification Sensor Rear RH
SVC1 SIG1 SGD1
SVC2 SIG2 SGD2
SVC3 SIG3 SGD3
SVC4 SIG4 SGD4
IG
+B
O 3(A), O 4(B), O 9(C), O10(D) Occupant Classification ECU
FSR-
FSR+
DIA
BSW
BGND
GND
B10 Buckle SW RH
J18(A), J19(B) Junction Connector
Data Link Connector 3 <5-20><6-20>
Under the Front Passenger' s Seat
Front Side of Rear Quarter Wheel House RH
(TMC Made w/o Power Seat)
(TMMK Made w/o Power Seat)

# M OVERALL ELECTRICAL WIRING DIAGRAM

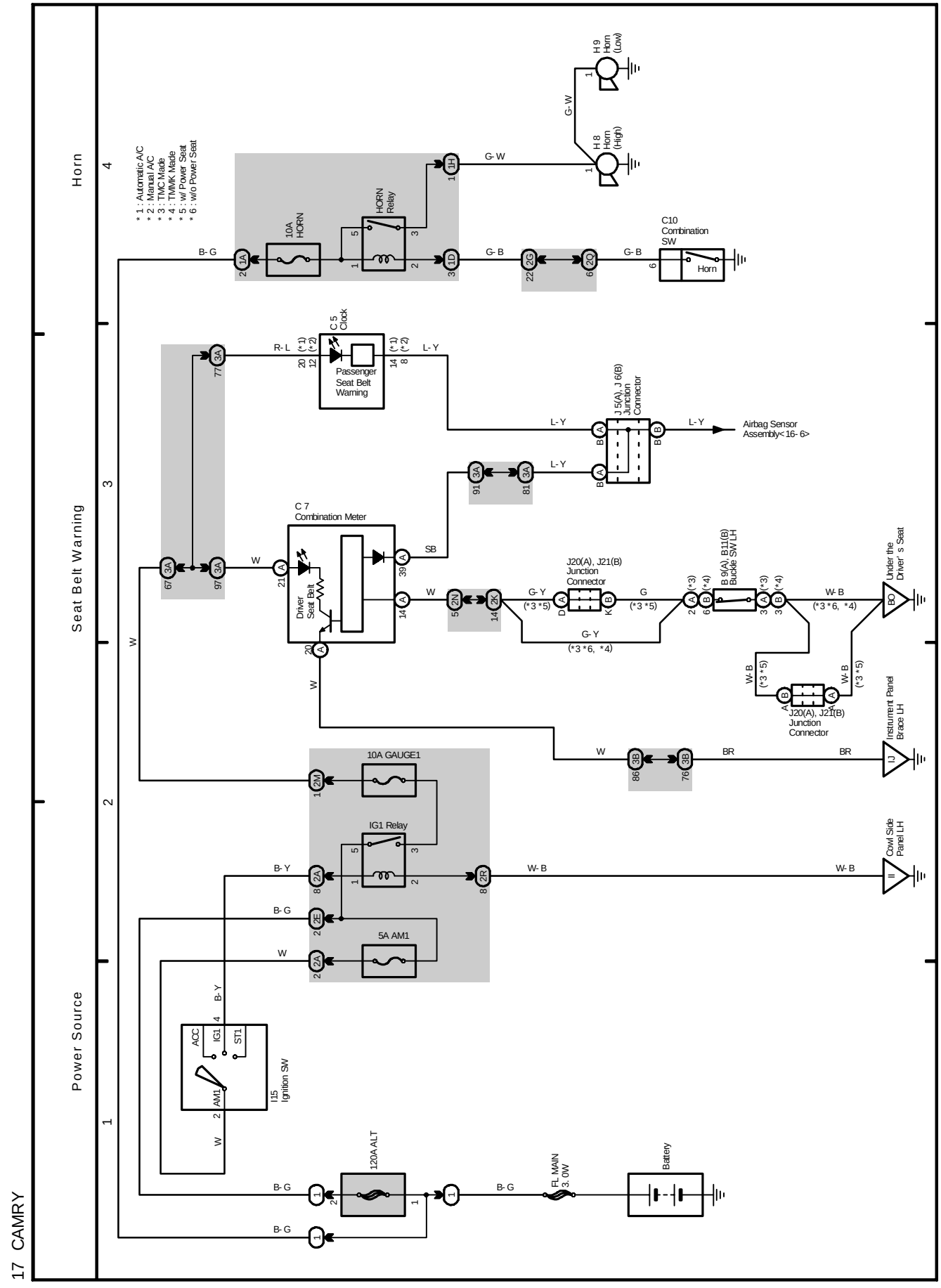

# M OVERALL ELECTRICAL WIRING DIAGRAM

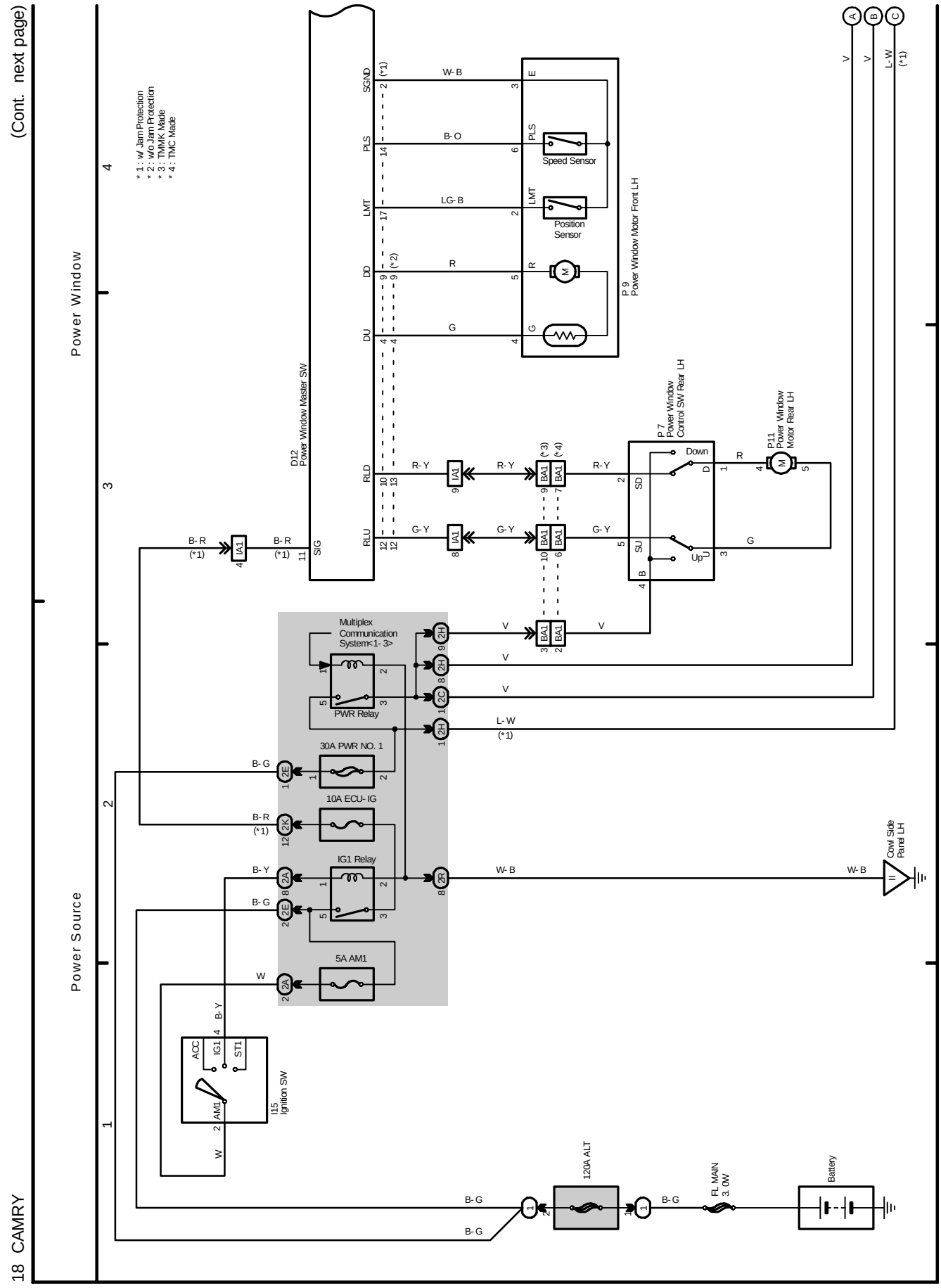

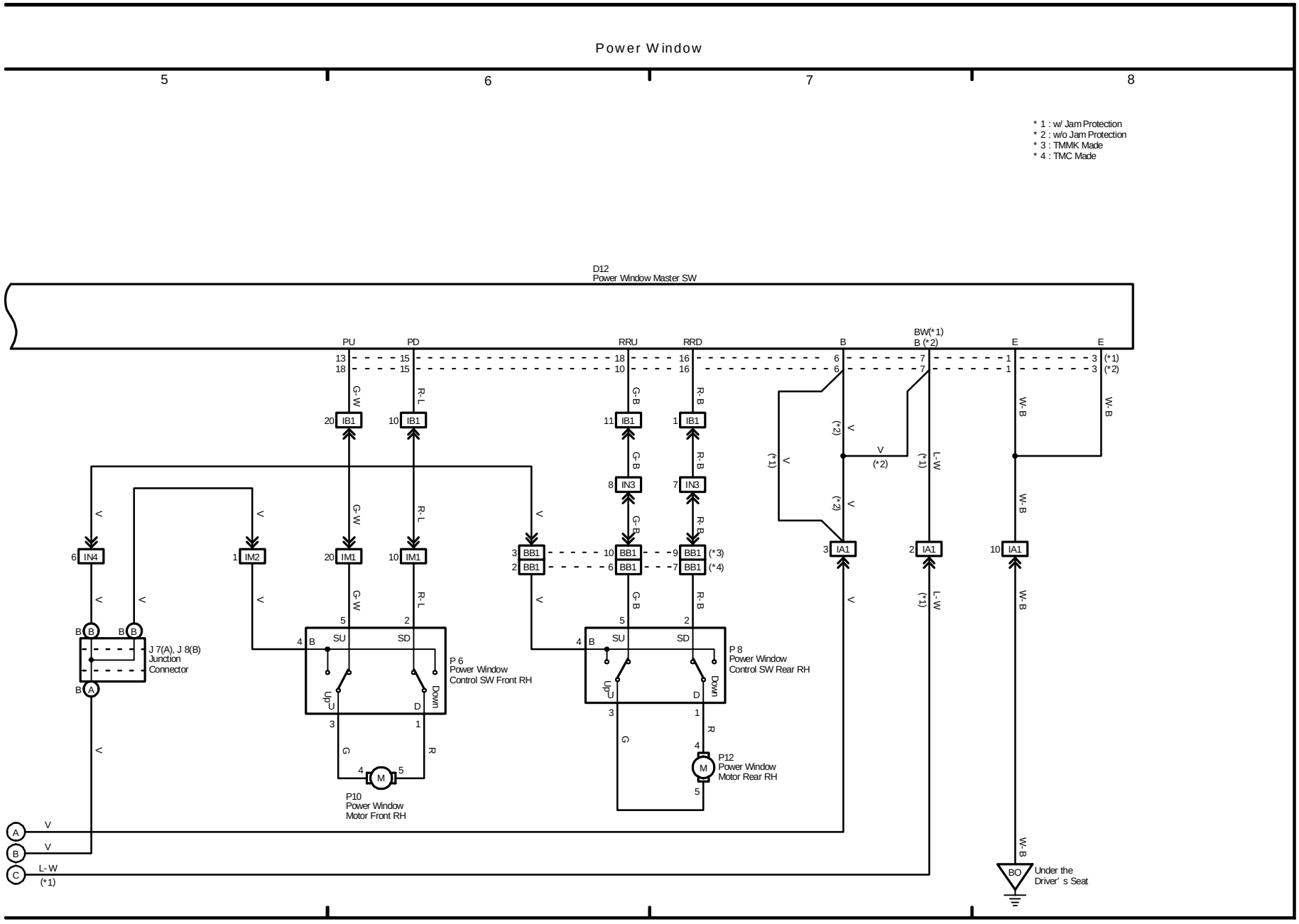
Power Window
5
6
7
8
* 1 : w/ Jam Protection
* 2 : w/o Jam Protection
* 3 : TMMK Made
* 4 : TMC Made
D12
Power Window Master SW
PU
PD
RRU
RRD
B
BW(*1)
B (*2)
E
E
G-W
R-L
G-B
R-B
W-B
L-W
V
IB1
IN3
IN4
IM1
IM2
BB1
IA1
(*1)
(*2)
(*3)
(*4)
J 7(A), J 8(B)
Junction
Connector
P 6
Power Window
Control SW Front RH
P 8
Power Window
Control SW Rear RH
SU
SD
Up
Down
P10
Power Window
Motor Front RH
P12
Power Window
Motor Rear RH
M
L-W
(*1)
BO
Under the
Driver' s Seat

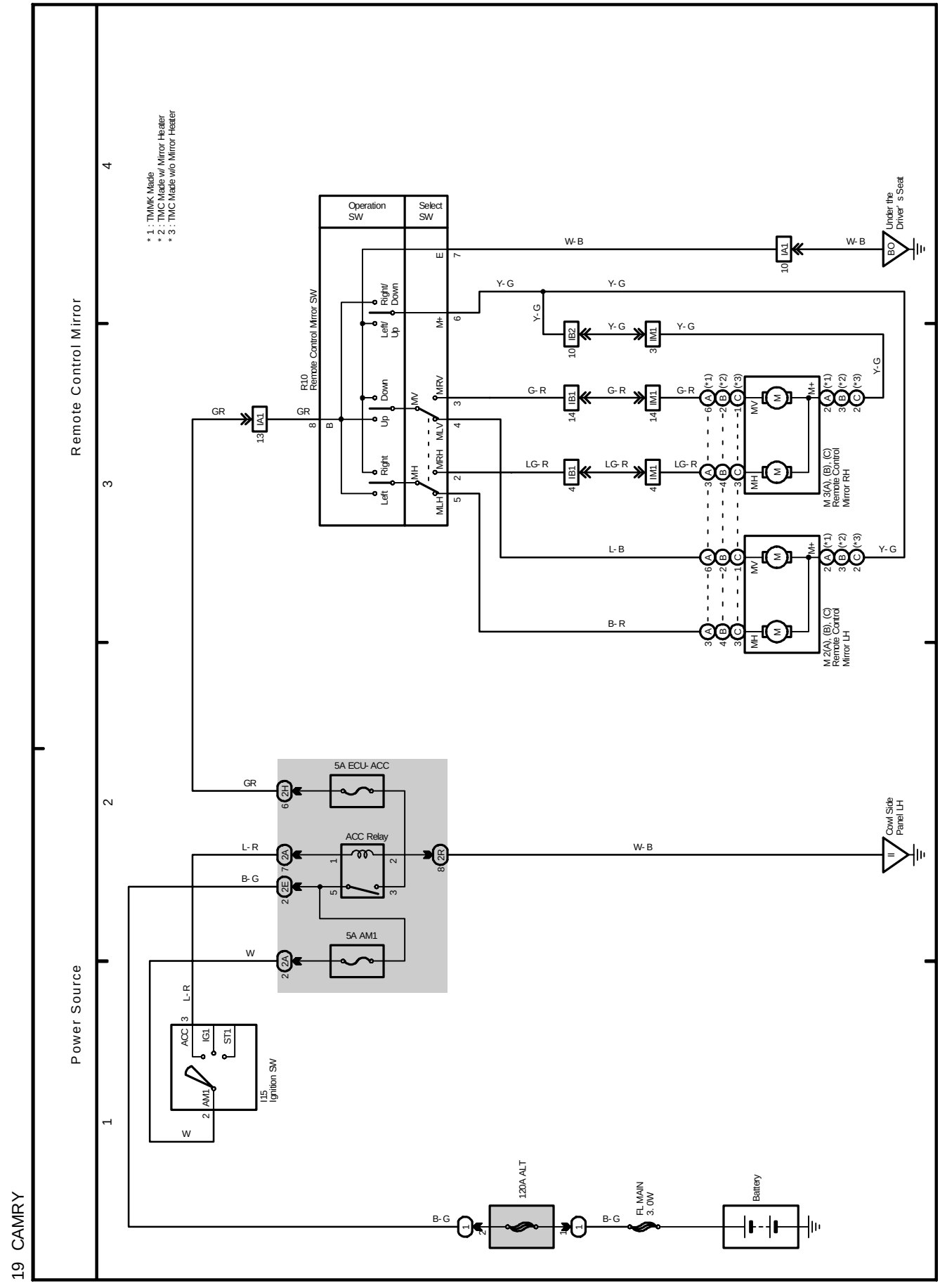
19 CAMRY
Power Source
Remote Control Mirror
1
2
3
4
* 1 : TMMK Made
* 2 : TMC Made w/ Mirror Heater
* 3 : TMC Made w/o Mirror Heater
Operation SW
Select SW
R10 Remote Control Mirror SW
Right/ Down
Left/ Up
Down
Up
Right
Left
MV
MRV
MLV
MH
MRH
MLH
M+
E
B
W-B
Y-G
G-R
LG-R
L-B
B-R
GR
L-R
B-G
W
IA1
IB2
IB1
IM1
BO
Under the Driver' s Seat
M 3(A), (B), (C) Remote Control Mirror RH
M 2(A), (B), (C) Remote Contrd Mirror LH
5A ECU- ACC
ACC Relay
5A AM1
2H
2A
2E
2R
I15 Ignition SW
ACC
IG1
ST1
AM1
Cowl Side Panel LH
120A ALT
FL MAIN 3. 0W
Battery

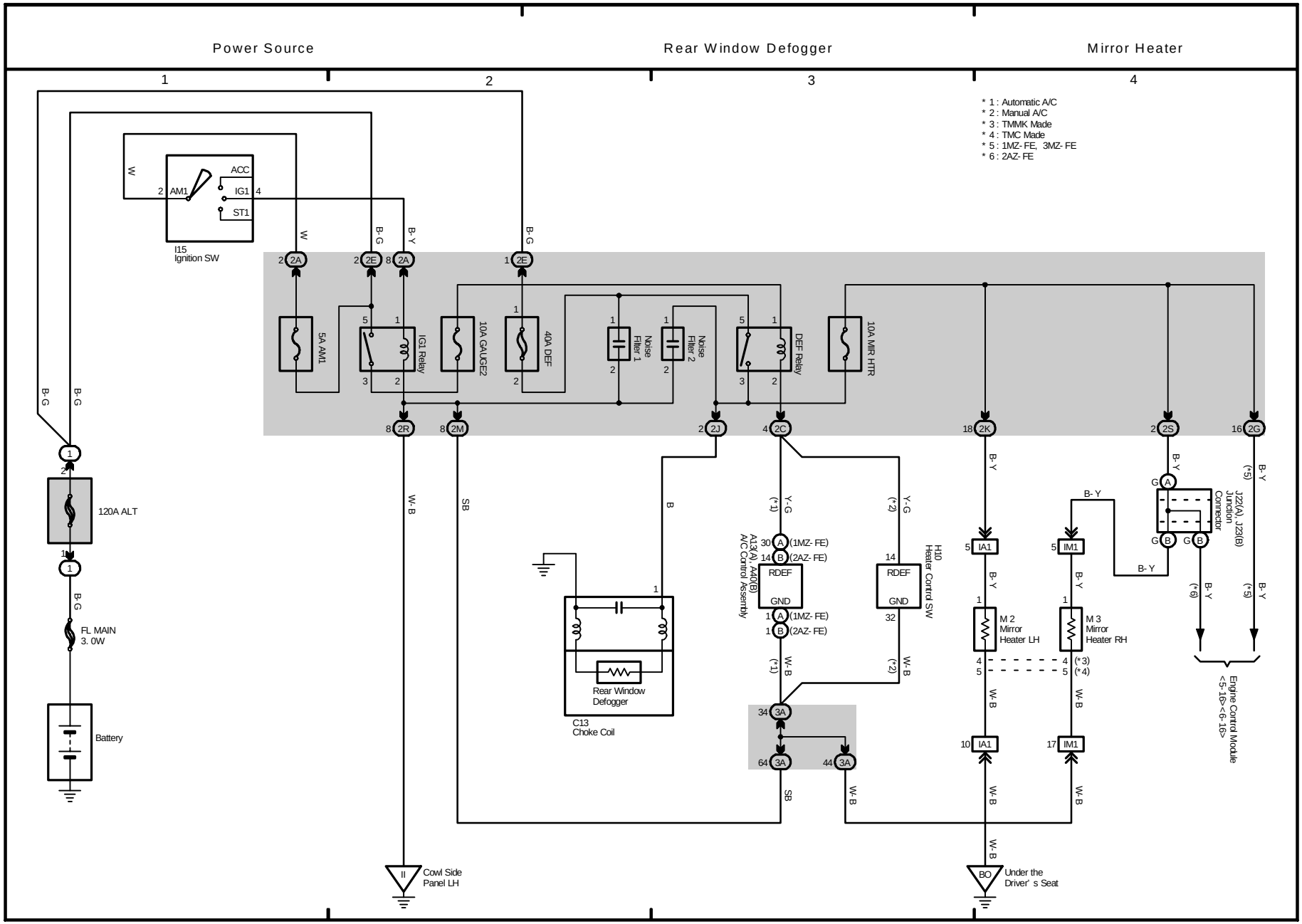
Power Source
Rear Window Defogger
Mirror Heater
1
2
3
4
* 1 : Automatic A/C
* 2 : Manual A/C
* 3 : TMMK Made
* 4 : TMC Made
* 5 : 1MZ- FE, 3MZ- FE
* 6 : 2AZ- FE
I15
Ignition SW
ACC
IG1
ST1
AM1
5A AM1
IG1 Relay
10A GAUGE2
40A DEF
Noise Filter 1
Noise Filter 2
DEF Relay
10A MIR HTR
120A ALT
FL MAIN
3. 0W
Battery
Rear Window Defogger
C13
Choke Coil
A13(A), A40(B)
A/C Control Assembly
RDEF
GND
H10
Heater Control SW
M 2
Mirror
Heater LH
M 3
Mirror
Heater RH
J22(A), J23(B)
Junction
Connector
Engine Control Module
<5-16><6-16>
Cowl Side
Panel LH
Under the
Driver' s Seat
W
B-G
B-Y
W-B
Y-G
B
SB

# M OVERALL ELECTRICAL WIRING DIAGRAM

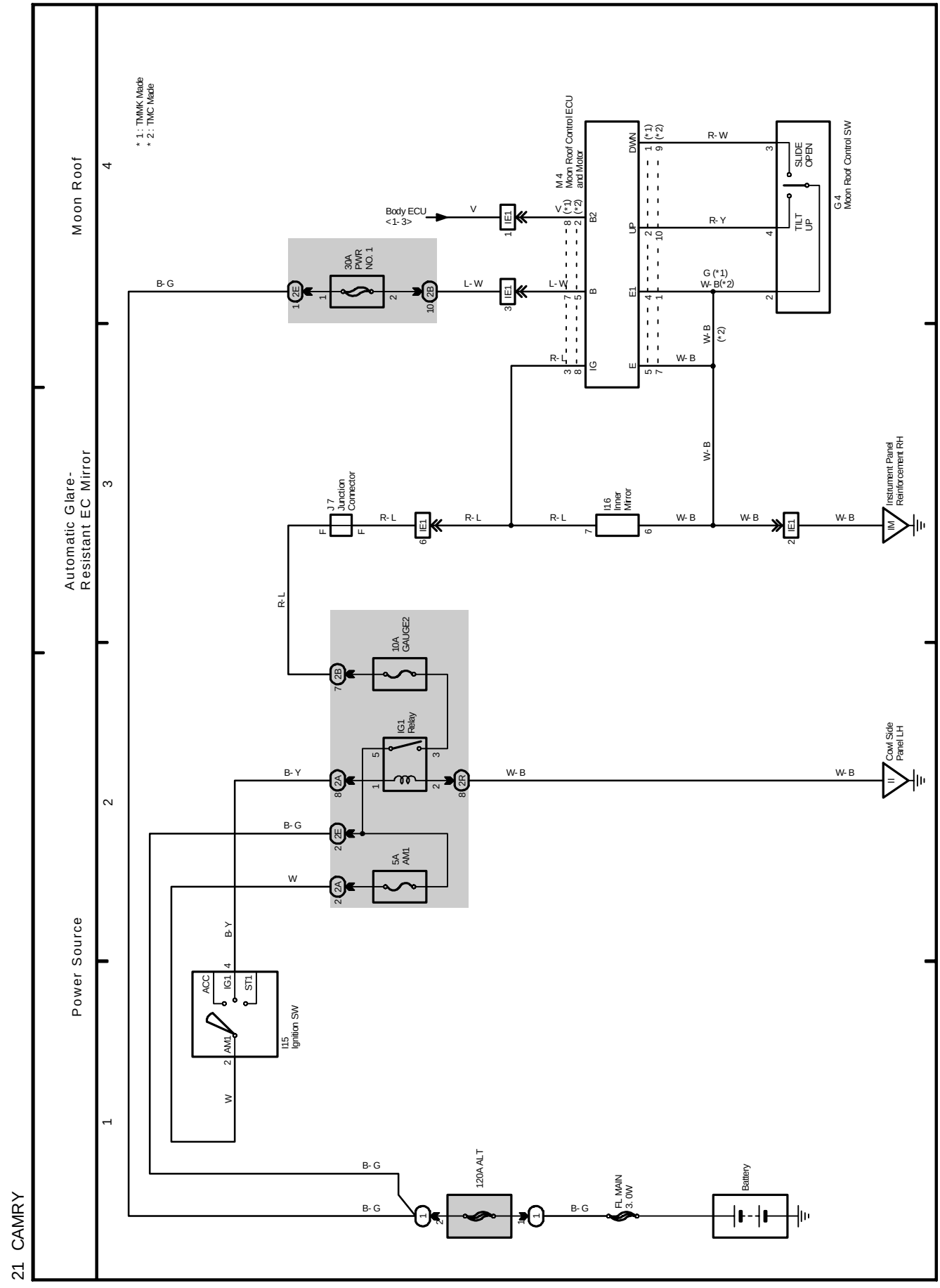

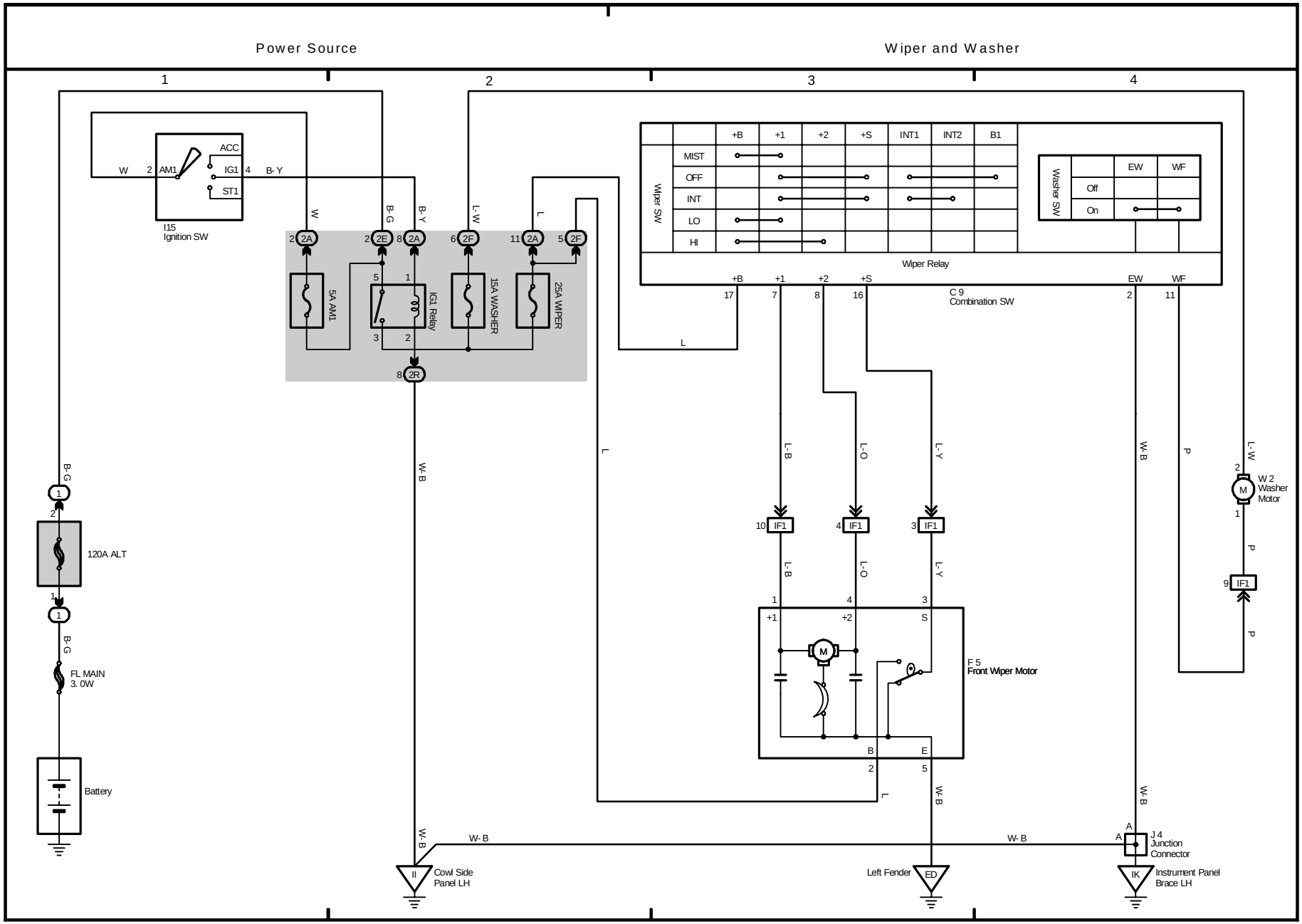
Power Source
Wiper and Washer
1
2
3
4
ACC
IG1
ST1
AM1
I15
Ignition SW
5A AM1
IG1 Relay
15A WASHER
25A WIPER
2R
MIST
OFF
INT
LO
HI
Wiper SW
+B
+1
+2
+S
INT1
INT2
B1
Wiper Relay
Washer SW
Off
On
EW
WF
C 9
Combination SW
120A ALT
FL MAIN
3. 0W
Battery
IF1
F 5
Front Wiper Motor
W 2
Washer
Motor
J 4
Junction
Connector
Cowl Side
Panel LH
Left Fender
Instrument Panel
Brace LH

# M OVERALL ELECTRICAL WIRING DIAGRAM

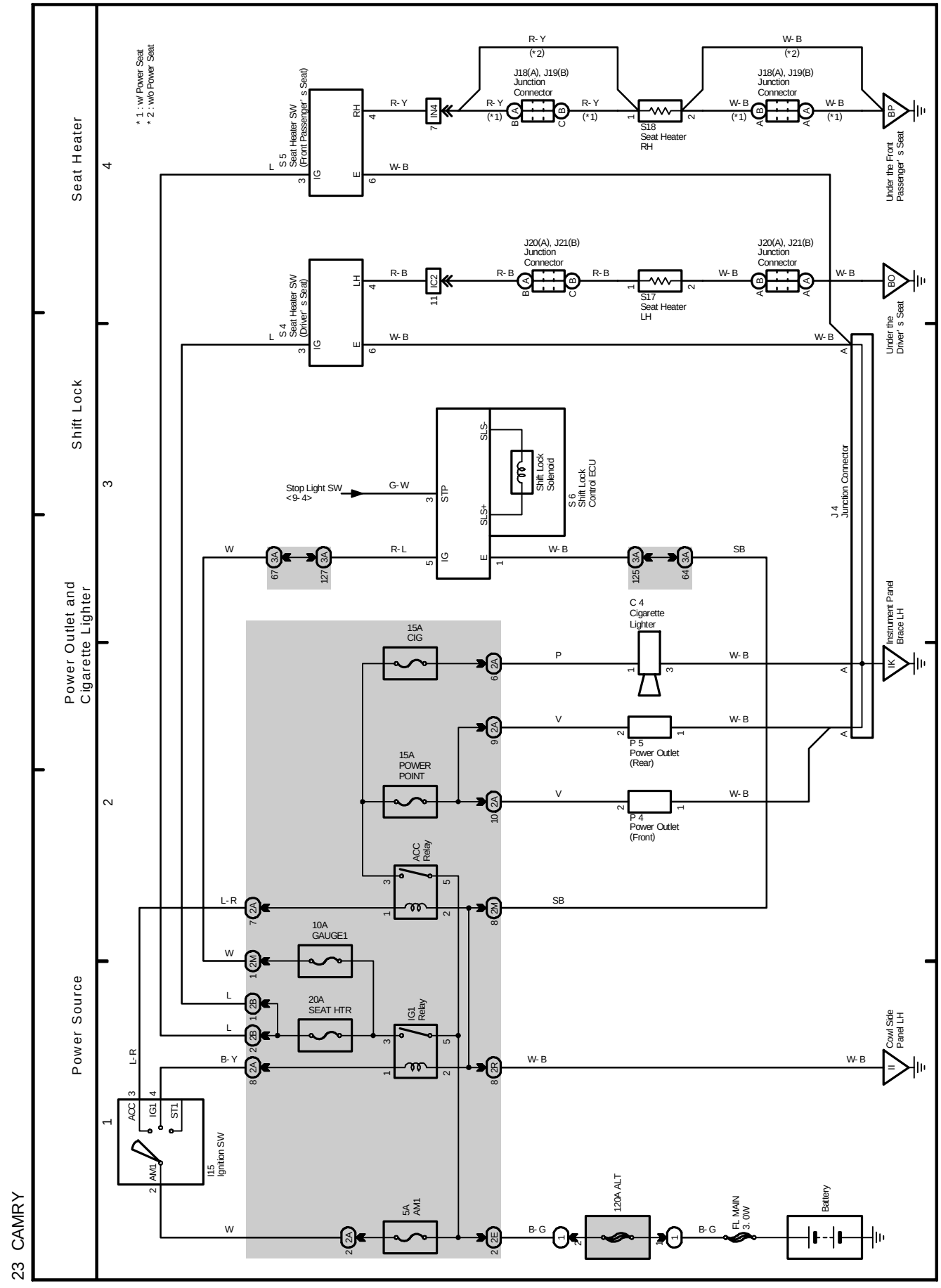

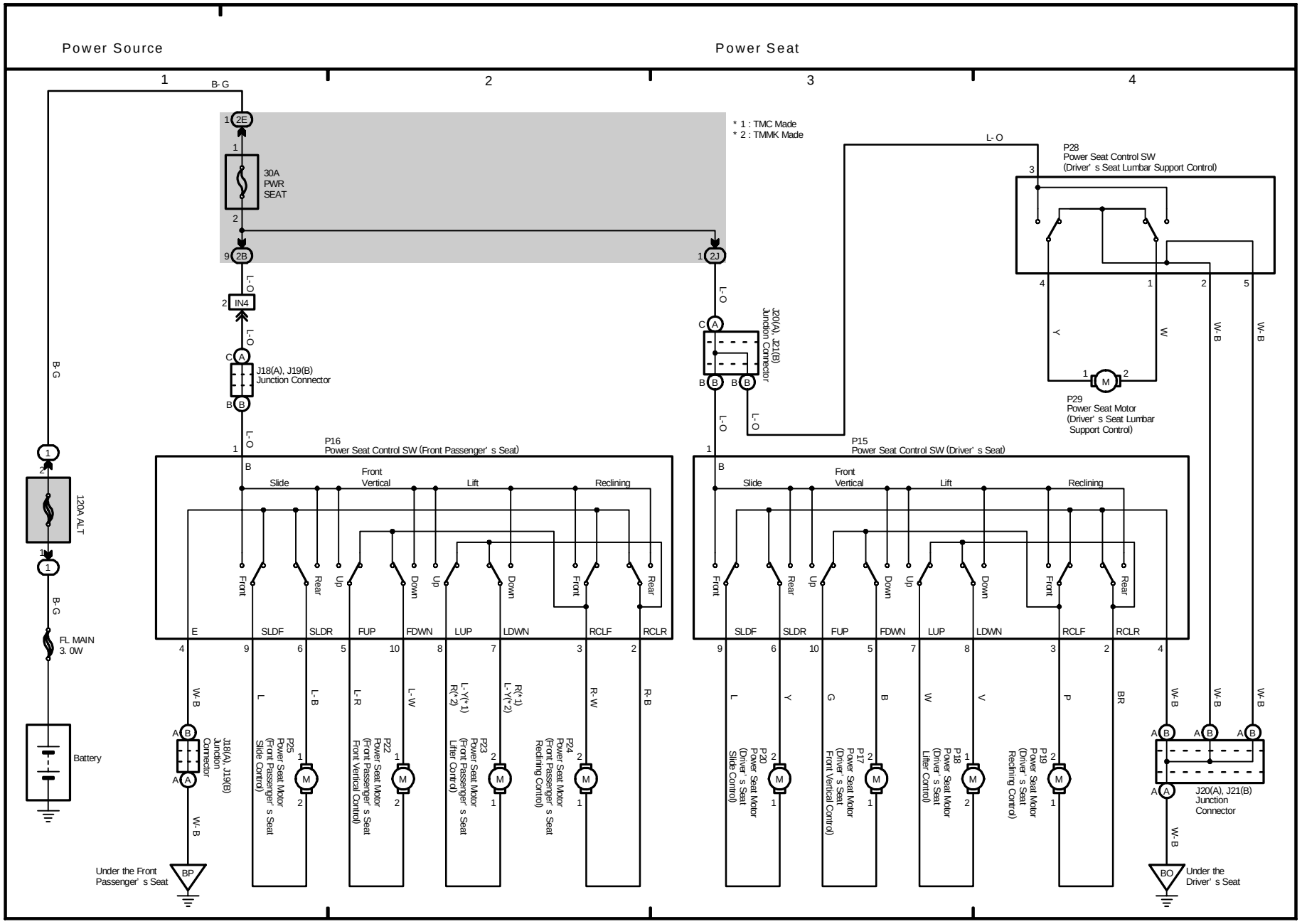
Power Source
Power Seat
1
2
3
4
* 1 : TMC Made
* 2 : TMMK Made
B-G
2E
30A
PWR
SEAT
2B
2J
L-O
IN4
J18(A), J19(B)
Junction Connector
J20(A), J21(B)
Junction Connector
P28
Power Seat Control SW
(Driver's Seat Lumbar Support Control)
P29
Power Seat Motor
(Driver's Seat Lumbar
Support Control)
P16
Power Seat Control SW (Front Passenger's Seat)
P15
Power Seat Control SW (Driver's Seat)
Slide
Front
Vertical
Lift
Reclining
Front
Rear
Up
Down
E
SLDF
SLDR
FUP
FDWN
LUP
LDWN
RCLF
RCLR
120A ALT
FL MAIN
3. 0W
Battery
W-B
L
L-B
L-R
L-W
L-Y(*1)
R(*2)
R(*1)
L-Y(*2)
R-W
R-B
Y
G
B
W
V
P
BR
P25
Power Seat Motor
(Front Passenger's Seat
Slide Control)
P22
Power Seat Motor
(Front Passenger's Seat
Front Vertical Control)
P23
Power Seat Motor
(Front Passenger's Seat
Lifter Control)
P24
Power Seat Motor
(Front Passenger's Seat
Reclining Control)
P20
Power Seat Motor
(Driver's Seat
Slide Control)
P17
Power Seat Motor
(Driver's Seat
Front Vertical Control)
P18
Power Seat Motor
(Driver's Seat
Lifter Control)
P19
Power Seat Motor
(Driver's Seat
Reclining Control)
Under the Front
Passenger's Seat
BP
Under the
Driver's Seat
BO

# M OVERALL ELECTRICAL WIRING DIAGRAM

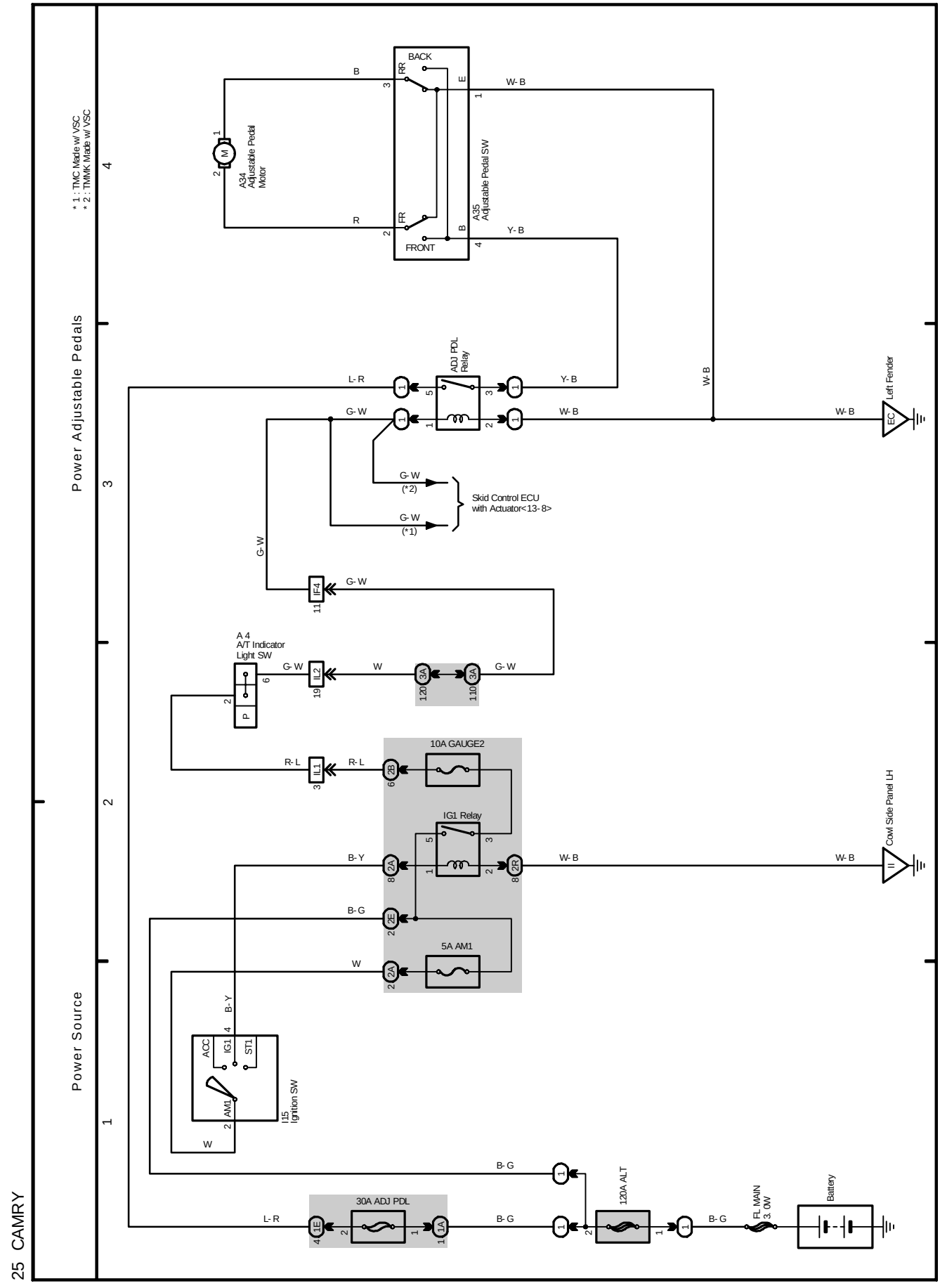

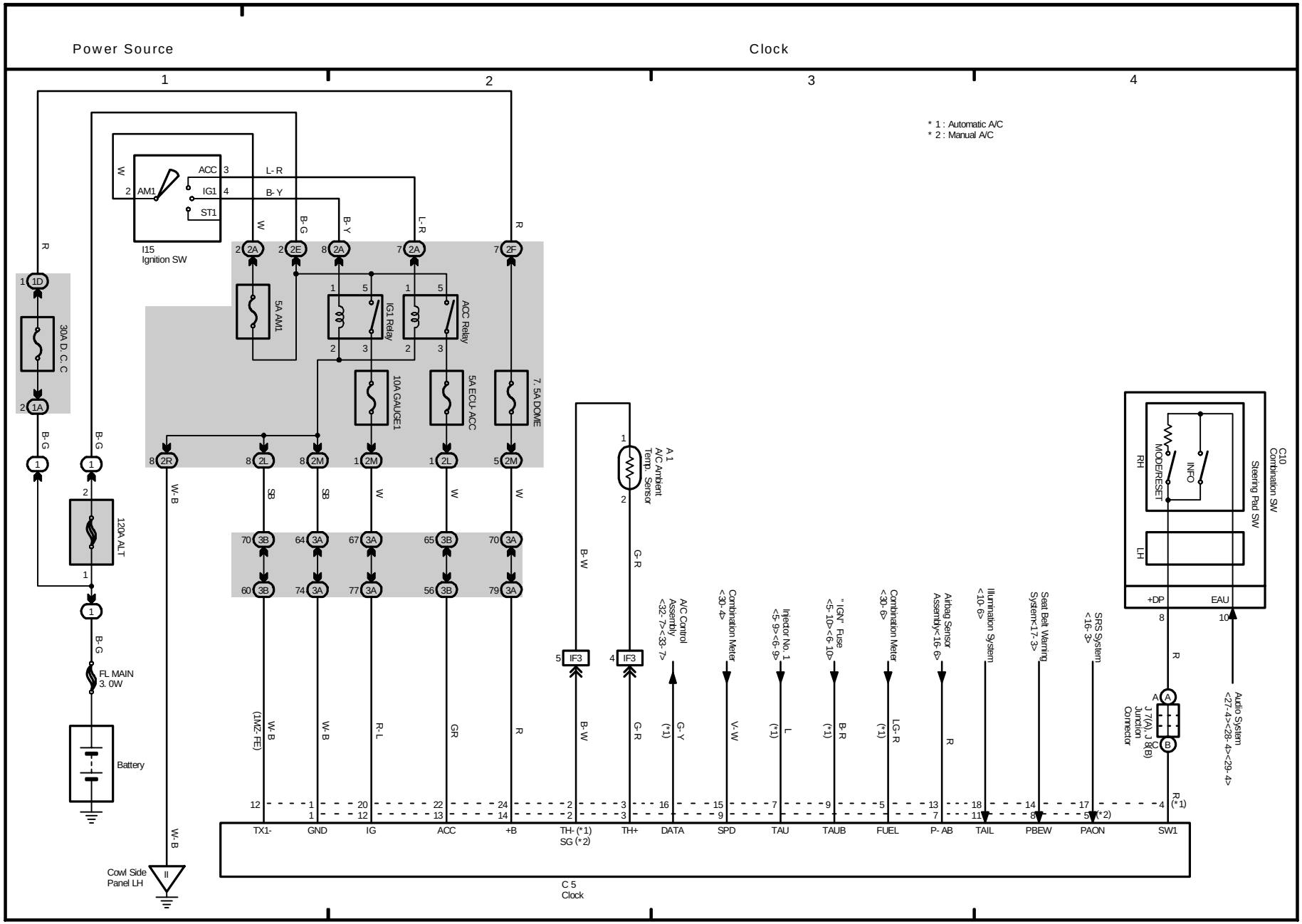
Power Source
Clock
1
2
3
4
* 1 : Automatic A/C
* 2 : Manual A/C
I15
Ignition SW
ACC
IG1
ST1
AM1
5A AM1
IG1 Relay
ACC Relay
10A GAUGE1
5A ECU-ACC
7. 5A DOME
30A D. C. C
120A ALT
FL MAIN
3. 0W
Battery
Cowl Side
Panel LH
A 1
A/C Ambient
Temp. Sensor
C10
Combination SW
Steering Pad SW
MODE/RESET
INFO
RH
LH
+DP
EAU
J 7(A), J 8(B)
Junction
Connector
A/C Control
Assembly
<32- 7><33- 7>
Combination Meter
<30- 4>
Injector No. 1
<5- 9><6- 9>
"IGN" Fuse
<5- 10><6- 10>
Combination Meter
<30- 6>
Airbag Sensor
Assembly<16- 6>
Illumination System
<10- 6>
Seat Belt Warning
System<17- 3>
SRS System
<16- 3>
Audio System
<27- 4><28- 4><29- 4>
TX1-
GND
IG
ACC
+B
TH- (*1)
SG (*2)
TH+
DATA
SPD
TAU
TAUB
FUEL
P- AB
TAIL
PBEW
PAON
SW1
C 5
Clock

# M OVERALL ELECTRICAL WIRING DIAGRAM

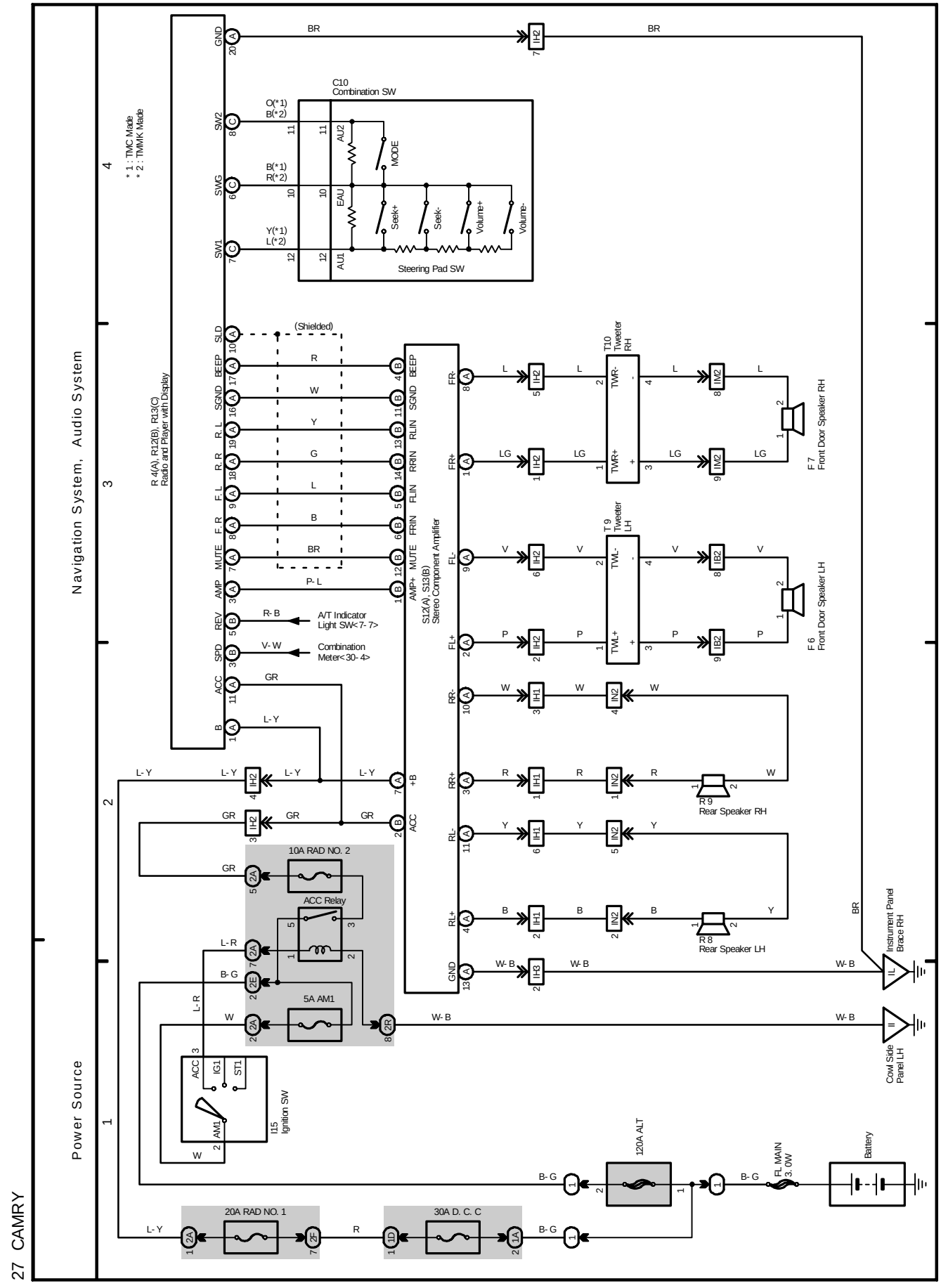

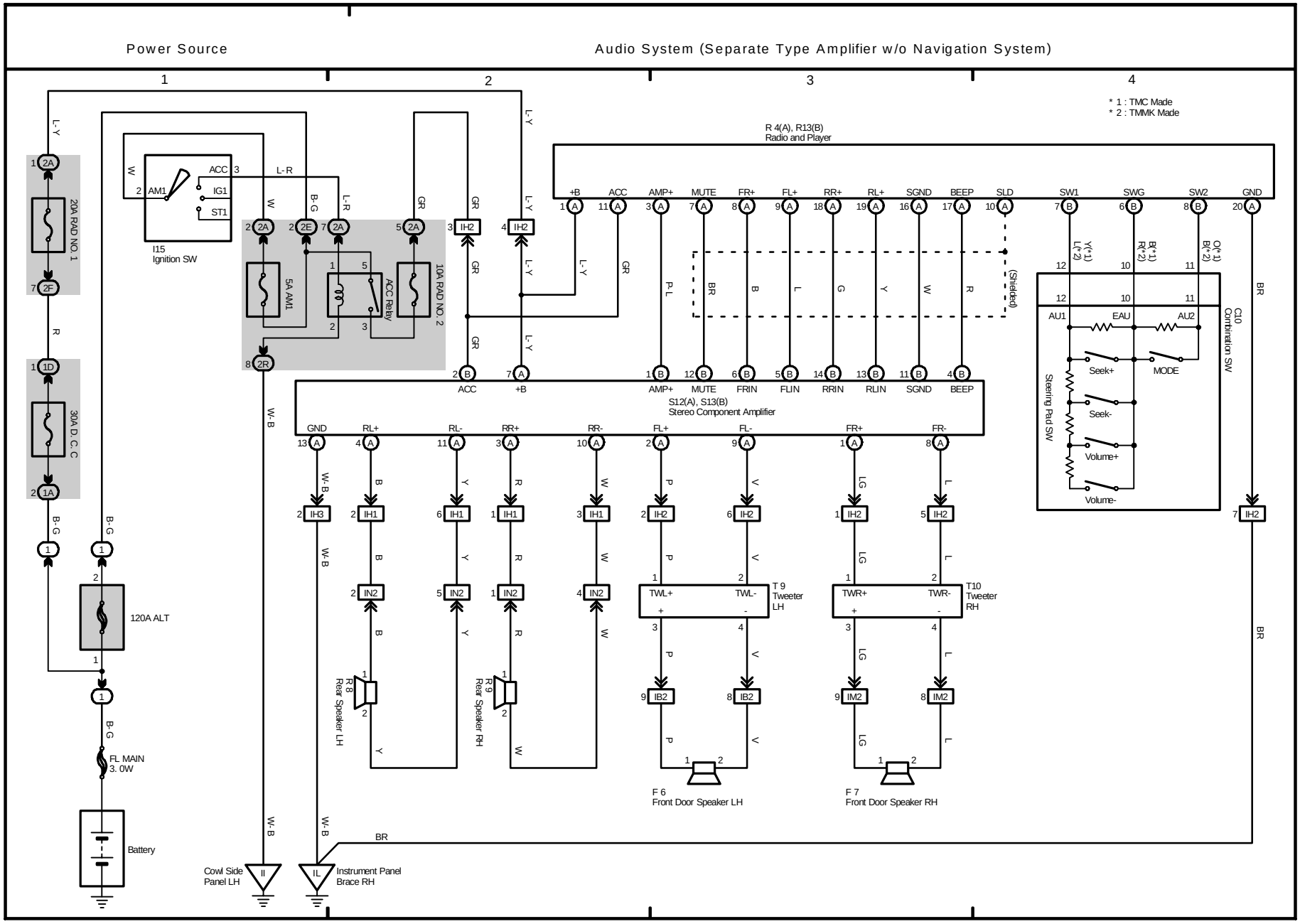
Power Source
Audio System (Separate Type Amplifier w/o Navigation System)
1
2
3
4
* 1 : TMC Made
* 2 : TMMK Made
R 4(A), R13(B)
Radio and Player
+B
ACC
AMP+
MUTE
FR+
FL+
RR+
RL+
SGND
BEEP
SLD
SW1
SWG
SW2
GND
(Shielded)
S12(A), S13(B)
Stereo Component Amplifier
AMP+
MUTE
FRIN
FLIN
RRIN
RLIN
SGND
BEEP
ACC
+B
GND
RL+
RL-
RR+
RR-
FL+
FL-
FR+
FR-
C10
Combination SW
AU1
EAU
AU2
Seek+
MODE
Seek-
Volume+
Volume-
Steering Pad SW
I15
Ignition SW
ACC
IG1
ST1
AM1
20A RAD NO. 1
30A D. C. C
120A ALT
FL MAIN
3. 0W
Battery
5A AM1
ACC Relay
10A RAD NO. 2
R 8
Rear Speaker LH
R 9
Rear Speaker RH
T 9
Tweeter
LH
T10
Tweeter
RH
TWL+
TWL-
TWR+
TWR-
F 6
Front Door Speaker LH
F 7
Front Door Speaker RH
Cowl Side
Panel LH
Instrument Panel
Brace RH

# M OVERALL ELECTRICAL WIRING DIAGRAM

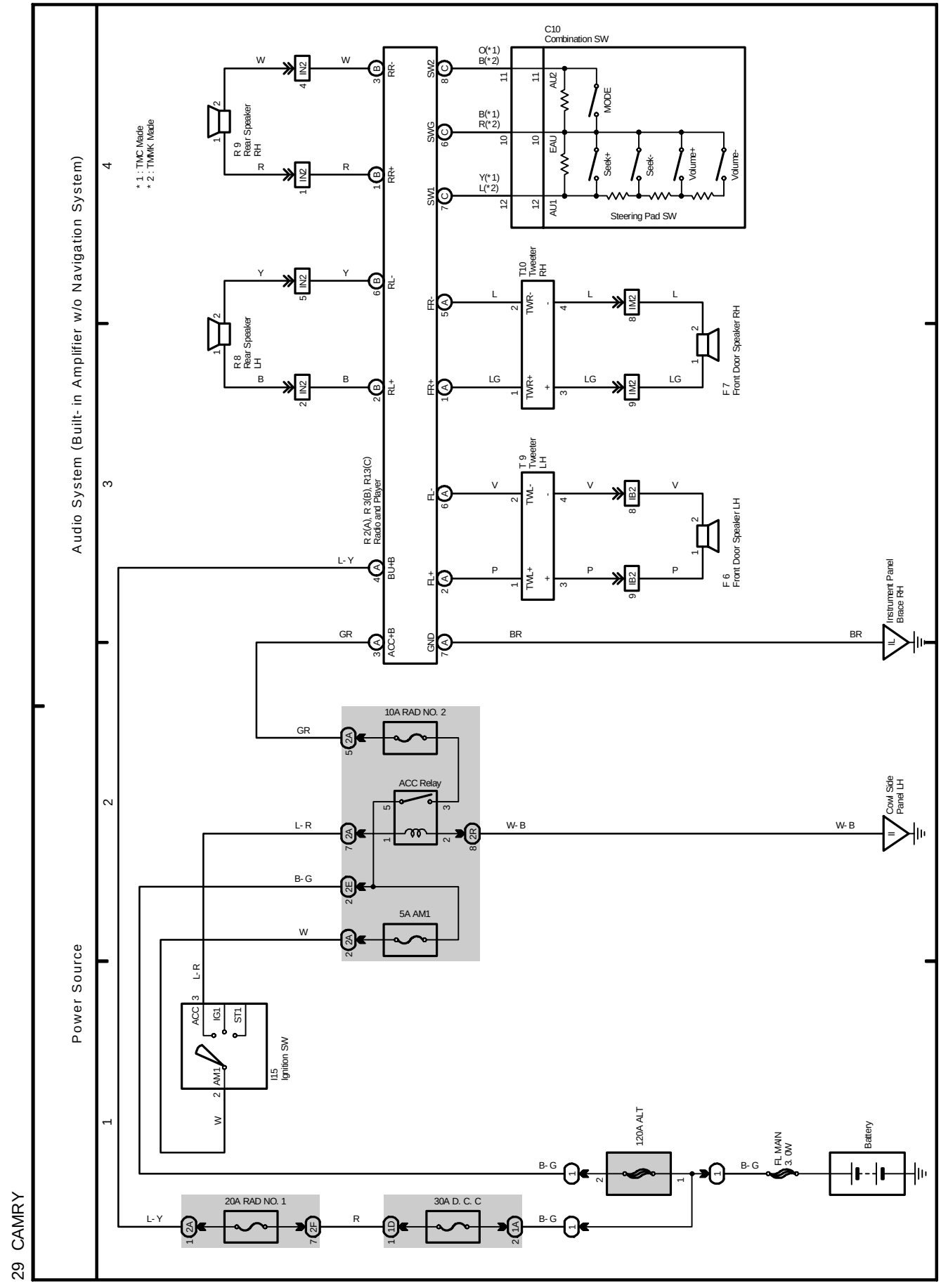

# M OVERALL ELECTRICAL WIRING DIAGRAM

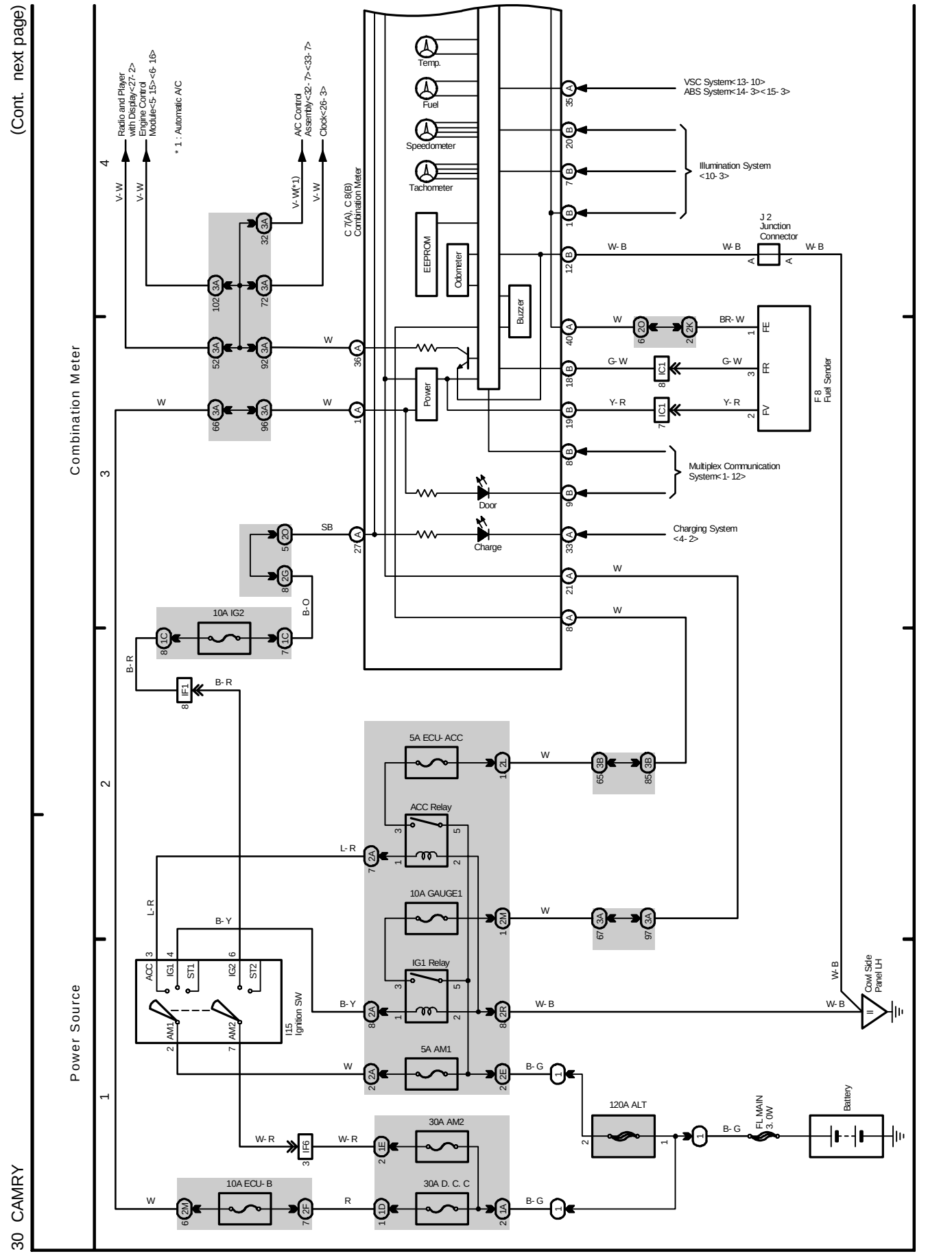

(Cont. next page)

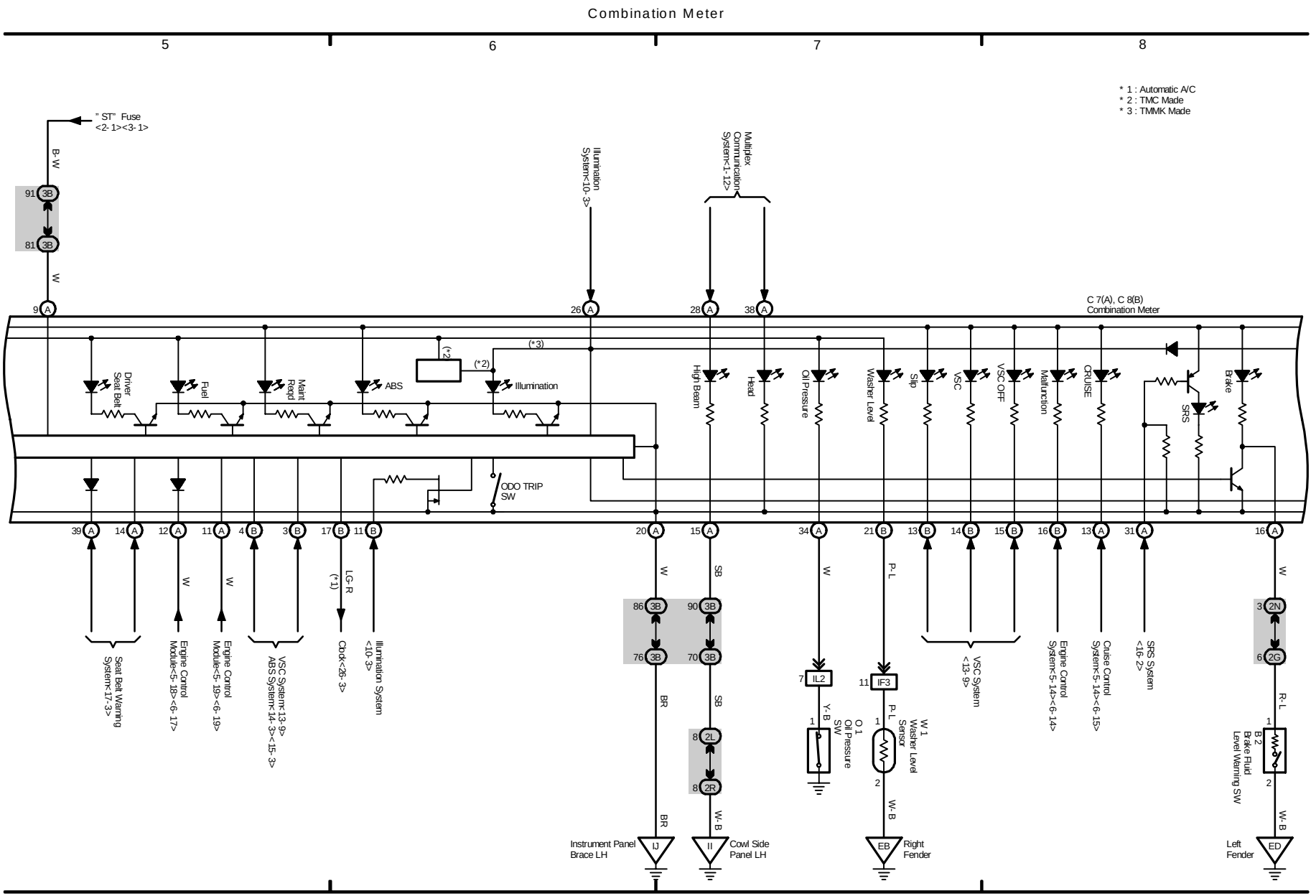

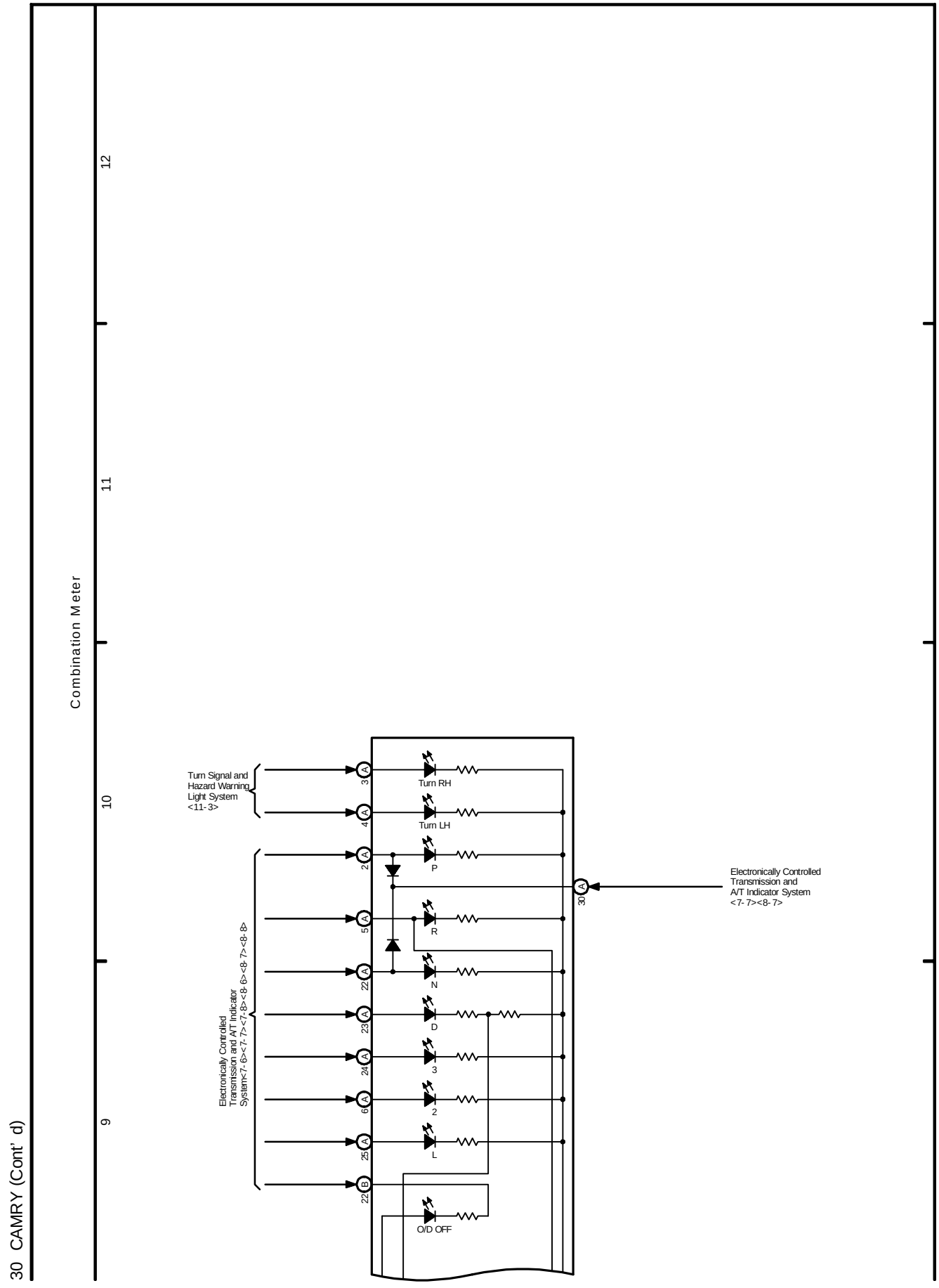
30 CAMRY (Cont' d)
9
10
11
12
Combination Meter
Turn Signal and Hazard Warning Light System <11-3>
Electronically Controlled Transmission and A/T Indicator System<7-6><7-7><7-8><8-6><8-7><8-8>
3 A
4 A
2 A
5 A
22 A
23 A
24 A
6 A
25 A
22 B
Turn RH
Turn LH
P
R
N
D
3
2
L
O/D OFF
30 A
Electronically Controlled Transmission and A/T Indicator System <7-7><8-7>

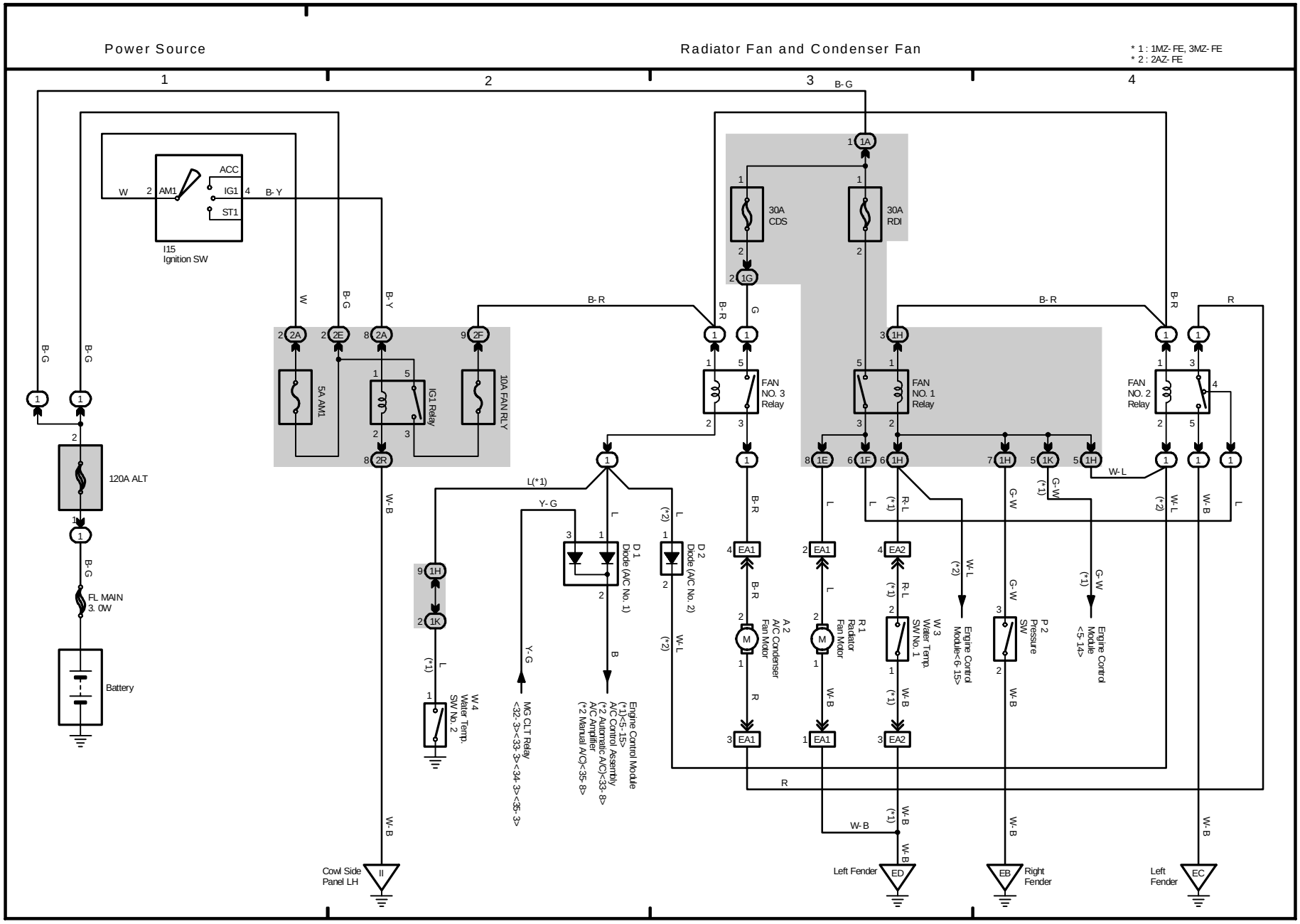
Power Source
Radiator Fan and Condenser Fan
* 1 : 1MZ- FE, 3MZ- FE
* 2 : 2AZ- FE
1
2
3
4
ACC
IG1
ST1
AM1
W
B- Y
I15
Ignition SW
B- G
W
B- Y
B- R
G
L(*1)
Y- G
L
B
W- B
R
R- L
G- W
W- L
L
120A ALT
FL MAIN
3. 0W
Battery
5A AM1
IG1 Relay
10A FAN RLY
30A
CDS
30A
RDI
FAN
NO. 3
Relay
FAN
NO. 1
Relay
FAN
NO. 2
Relay
D 1
Diode (A/C No. 1)
D 2
Diode (A/C No. 2)
W 4
Water Temp.
SW No. 2
MG CLT Relay
<32- 3><33- 3><34- 3><35- 3>
Engine Control Module
(*1)<5- 15>
A/C Control Assembly
(*2 Automatic A/C)<33- 8>
A/C Amplifier
(*2 Manual A/C)<35- 8>
A 2
A/C Condenser
Fan Motor
R 1
Radiator
Fan Motor
W 3
Water Temp.
SW No. 1
P 2
Pressure
SW
Engine Control
Module
<6- 15>
Engine Control
Module
<5- 14>
Cowl Side
Panel LH
Left
Fender
Right
Fender
Left
Fender

# M OVERALL ELECTRICAL WIRING DIAGRAM

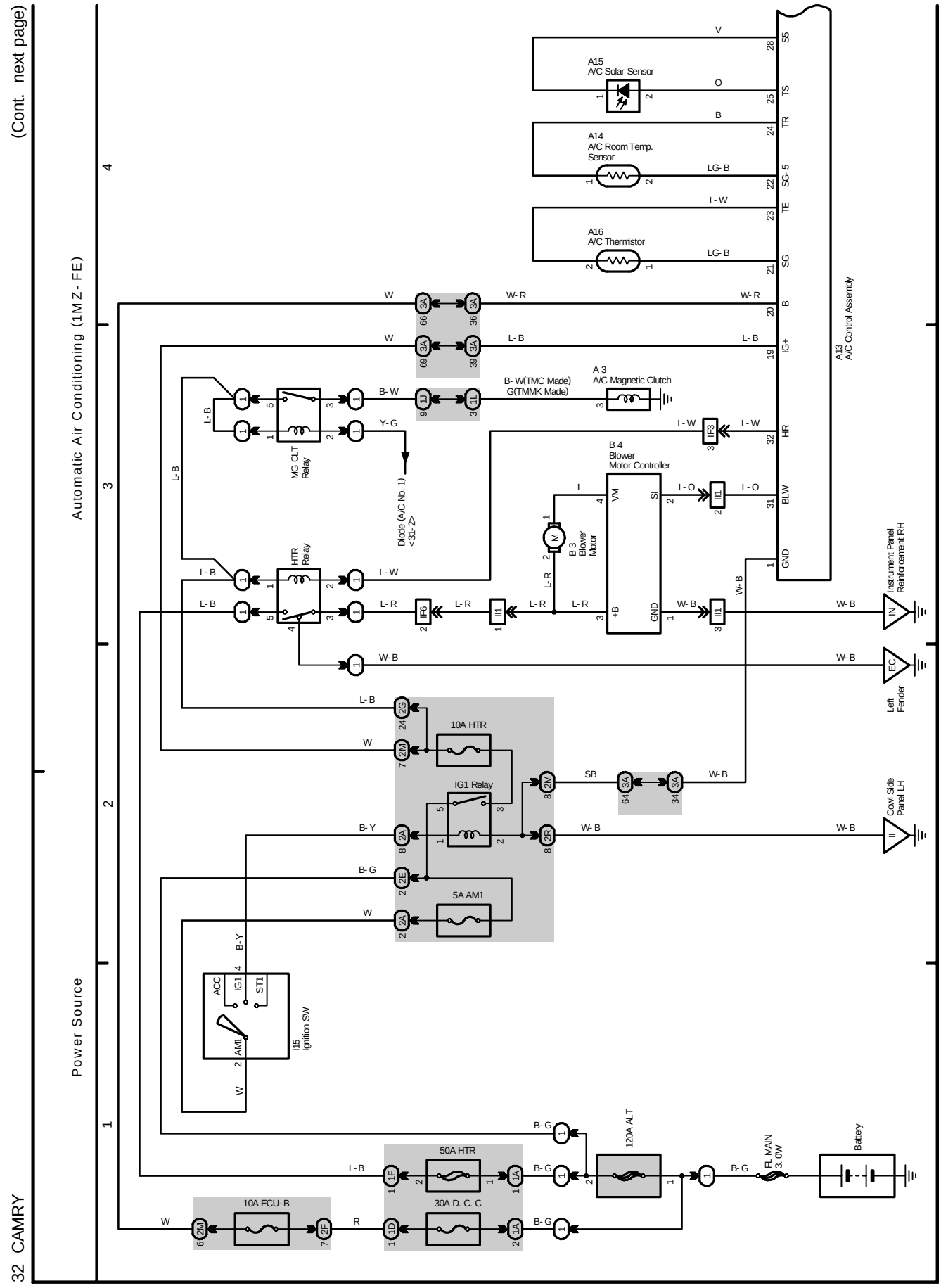

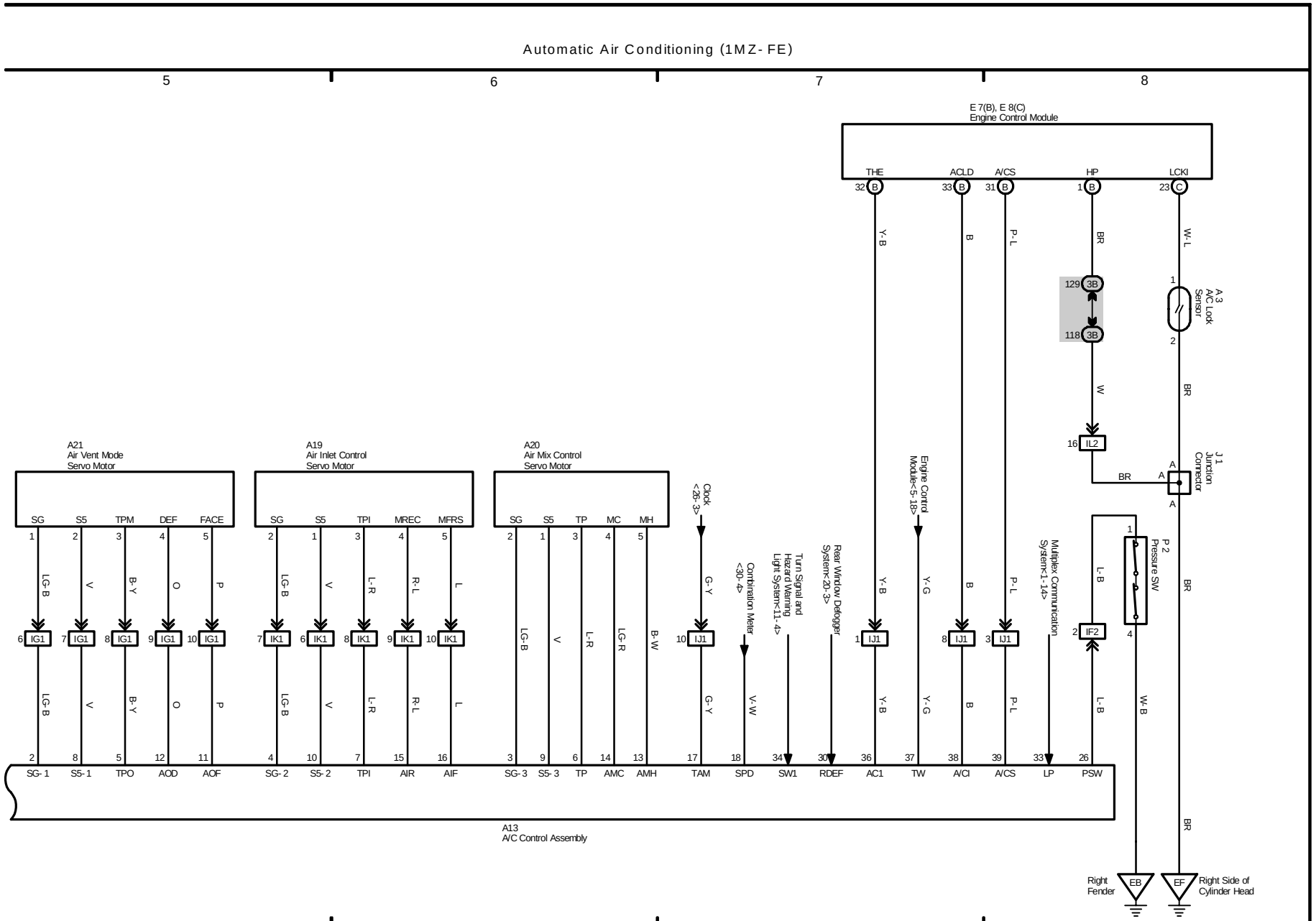
Automatic Air Conditioning (1MZ- FE)
5
6
7
8
E 7(B), E 8(C)
Engine Control Module
THE
ACLD
A/CS
HP
LCKI
32 B
33 B
31 B
1 B
23 C
Y- B
B
P- L
BR
W- L
129 3B
118 3B
W
16 IL2
A 3
A/C Lock
Sensor
J 1
Junction
Connector
BR
A
A21
Air Vent Mode
Servo Motor
SG
S5
TPM
DEF
FACE
LG- B
V
B- Y
O
P
IG1
A19
Air Inlet Control
Servo Motor
TPI
MREC
MFRS
L- R
R- L
L
IK1
A20
Air Mix Control
Servo Motor
TP
MC
MH
LG- B
V
L- R
LG- R
B- W
Clock
<26- 3>
G- Y
IJ1
Combination Meter
<30- 4>
V- W
Turn Signal and
Hazard Warning
Light System<11- 4>
Rear Window Defogger
System<20- 3>
Engine Control
Module<5- 18>
Y- G
Multiplex Communication
System<1- 14>
L- B
IF2
P 2
Pressure SW
W- B
SG- 1
S5- 1
TPO
AOD
AOF
SG- 2
S5- 2
TPI
AIR
AIF
SG- 3
S5- 3
TP
AMC
AMH
TAM
SPD
SW1
RDEF
AC1
TW
A/CI
A/CS
LP
PSW
A13
A/C Control Assembly
Right
Fender
EB
EF
Right Side of
Cylinder Head

# M OVERALL ELECTRICAL WIRING DIAGRAM

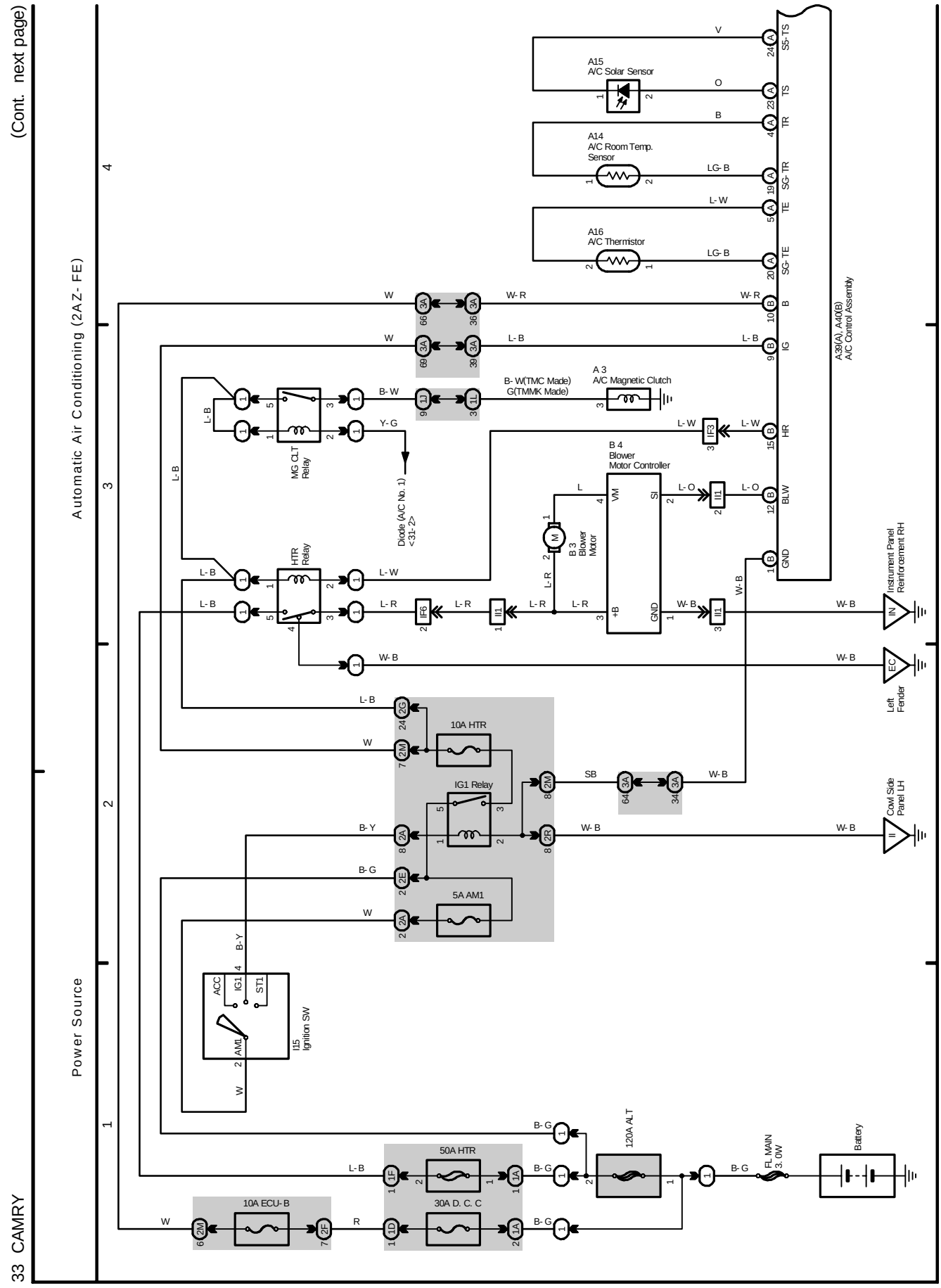

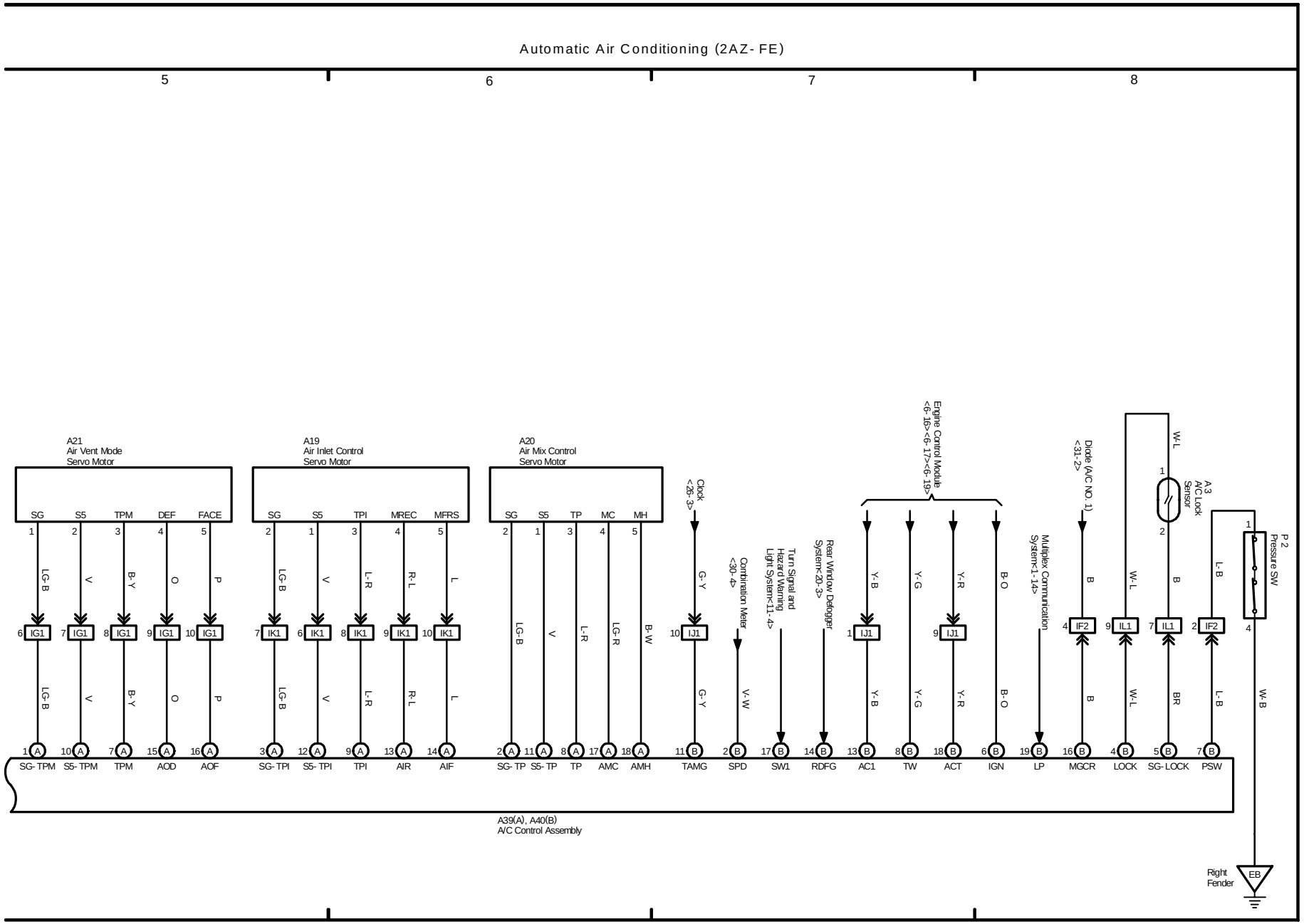
Automatic Air Conditioning (2AZ- FE)
5
6
7
8
A21
Air Vent Mode
Servo Motor
SG
S5
TPM
DEF
FACE
A19
Air Inlet Control
Servo Motor
SG
S5
TPI
MREC
MFRS
A20
Air Mix Control
Servo Motor
SG
S5
TP
MC
MH
Clock
<26- 3>
Engine Control Module
<6- 16><6- 17><6- 19>
Diode (A/C NO. 1)
<31- 2>
W- L
A3
A/C Lock
Sensor
P 2
Pressure SW
Combination Meter
<30- 4>
Turn Signal and
Hazard Warning
Light System<11- 4>
Rear Window Defogger
System<20- 3>
Multiplex Communication
System<1- 14>
SG- TPM
S5- TPM
TPM
AOD
AOF
SG- TPI
S5- TPI
TPI
AIR
AIF
SG- TP
S5- TP
TP
AMC
AMH
TAMG
SPD
SW1
RDFG
AC1
TW
ACT
IGN
LP
MGCR
LOCK
SG- LOCK
PSW
A39(A), A40(B)
A/C Control Assembly
Right
Fender
EB

# M OVERALL ELECTRICAL WIRING DIAGRAM

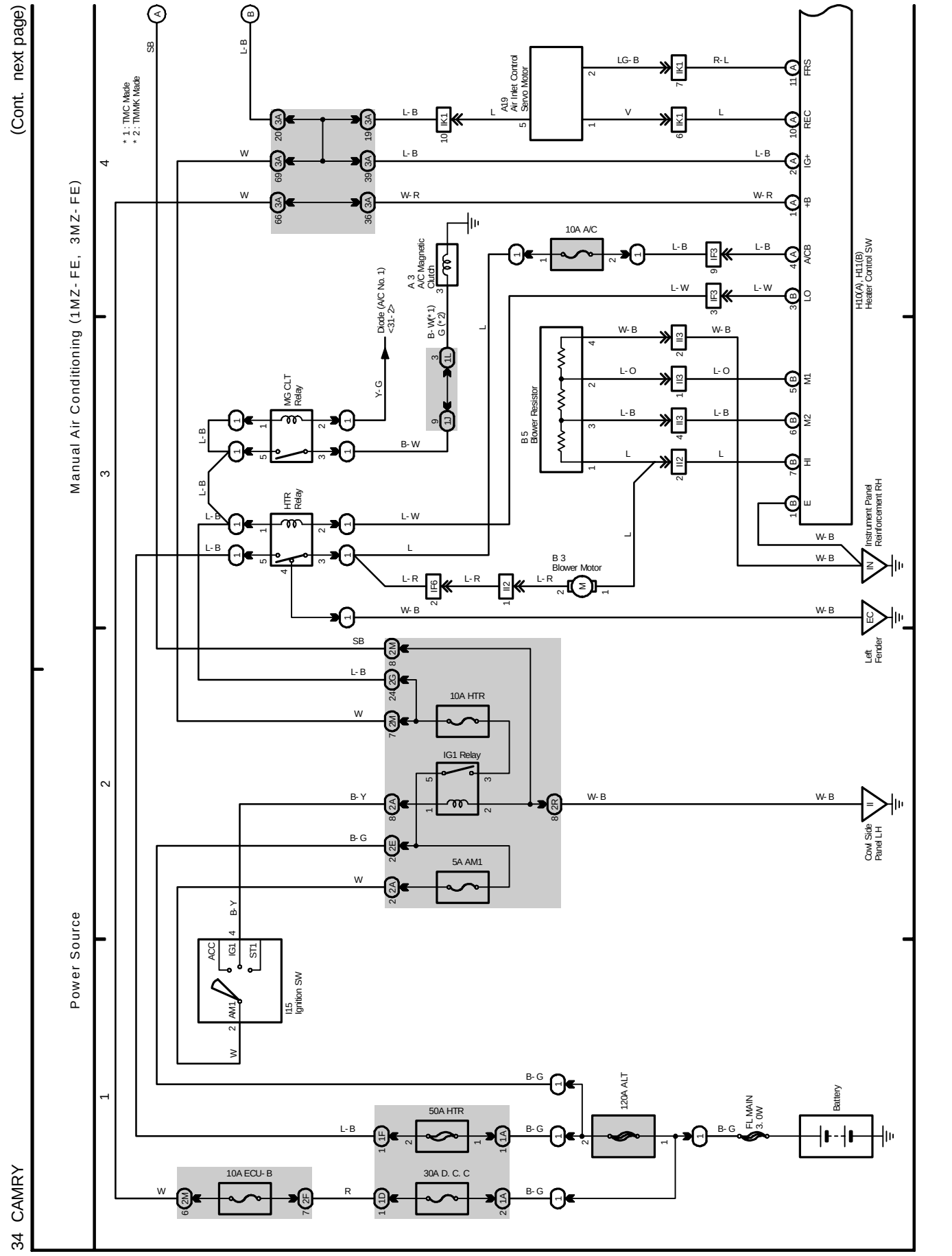

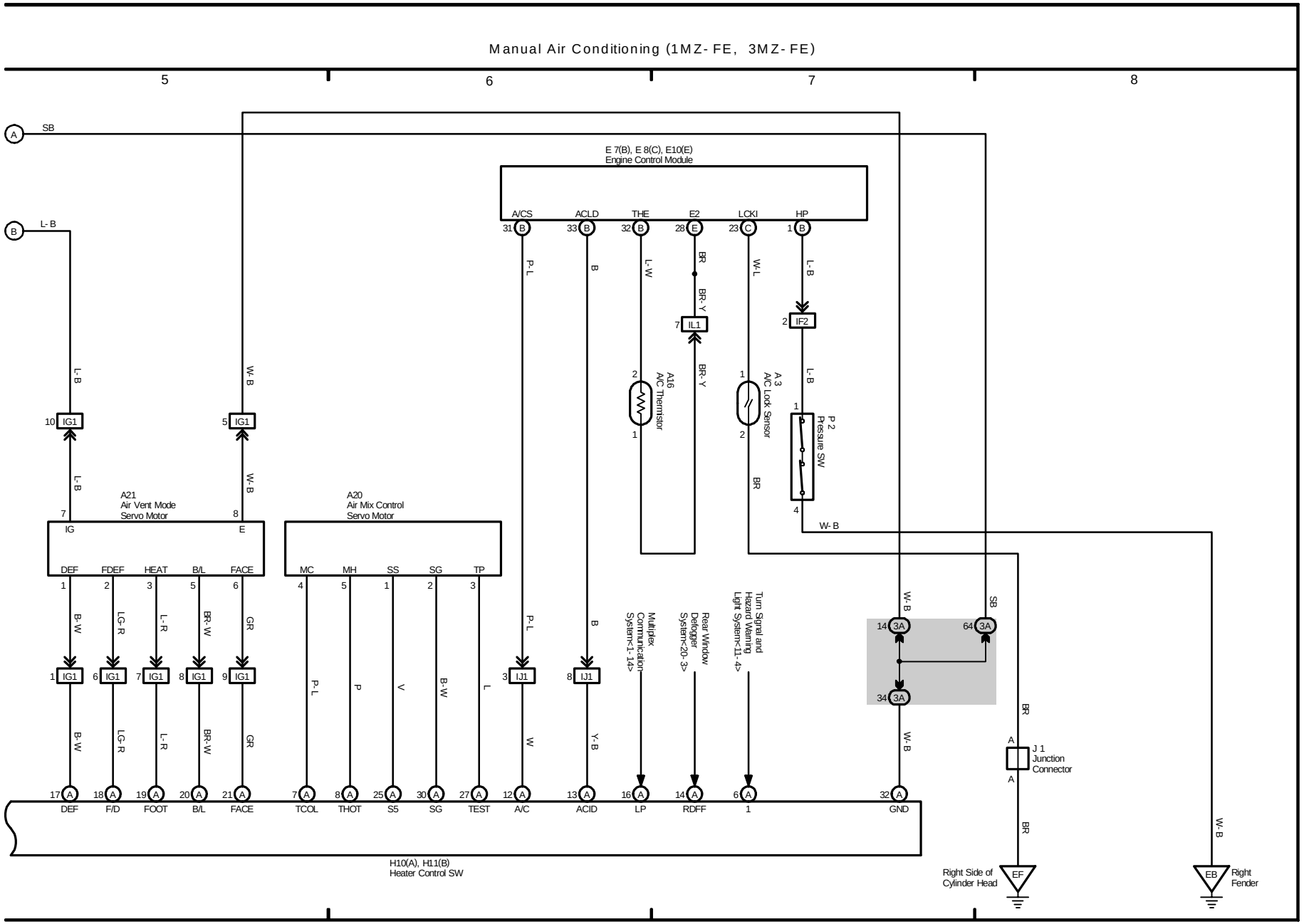
Manual Air Conditioning (1MZ- FE, 3MZ- FE)
5
6
7
8
SB
L- B
W- B
E 7(B), E 8(C), E10(E)
Engine Control Module
A/CS
ACLD
THE
E2
LCKI
HP
P- L
B
L- W
BR
BR- Y
W- L
L- B
IL1
IF2
A16
A/C Thermistor
A3
A/C Lock Sensor
P 2
Pressure SW
IG1
A21
Air Vent Mode
Servo Motor
A20
Air Mix Control
Servo Motor
IG
E
DEF
FDEF
HEAT
B/L
FACE
MC
MH
SS
SG
TP
B- W
LG- R
L- R
BR- W
GR
P- L
P
V
L
IJ1
W
Y- B
Multiplex
Communication
System<1- 14>
Rear Window
Defogger
System<20- 3>
Turn Signal and
Hazard Warning
Light System<11- 4>
3A
J 1
Junction
Connector
DEF
F/D
FOOT
B/L
FACE
TCOL
THOT
S5
SG
TEST
A/C
ACID
LP
RDFF
1
GND
H10(A), H11(B)
Heater Control SW
Right Side of
Cylinder Head
EF
EB
Right
Fender

# M OVERALL ELECTRICAL WIRING DIAGRAM

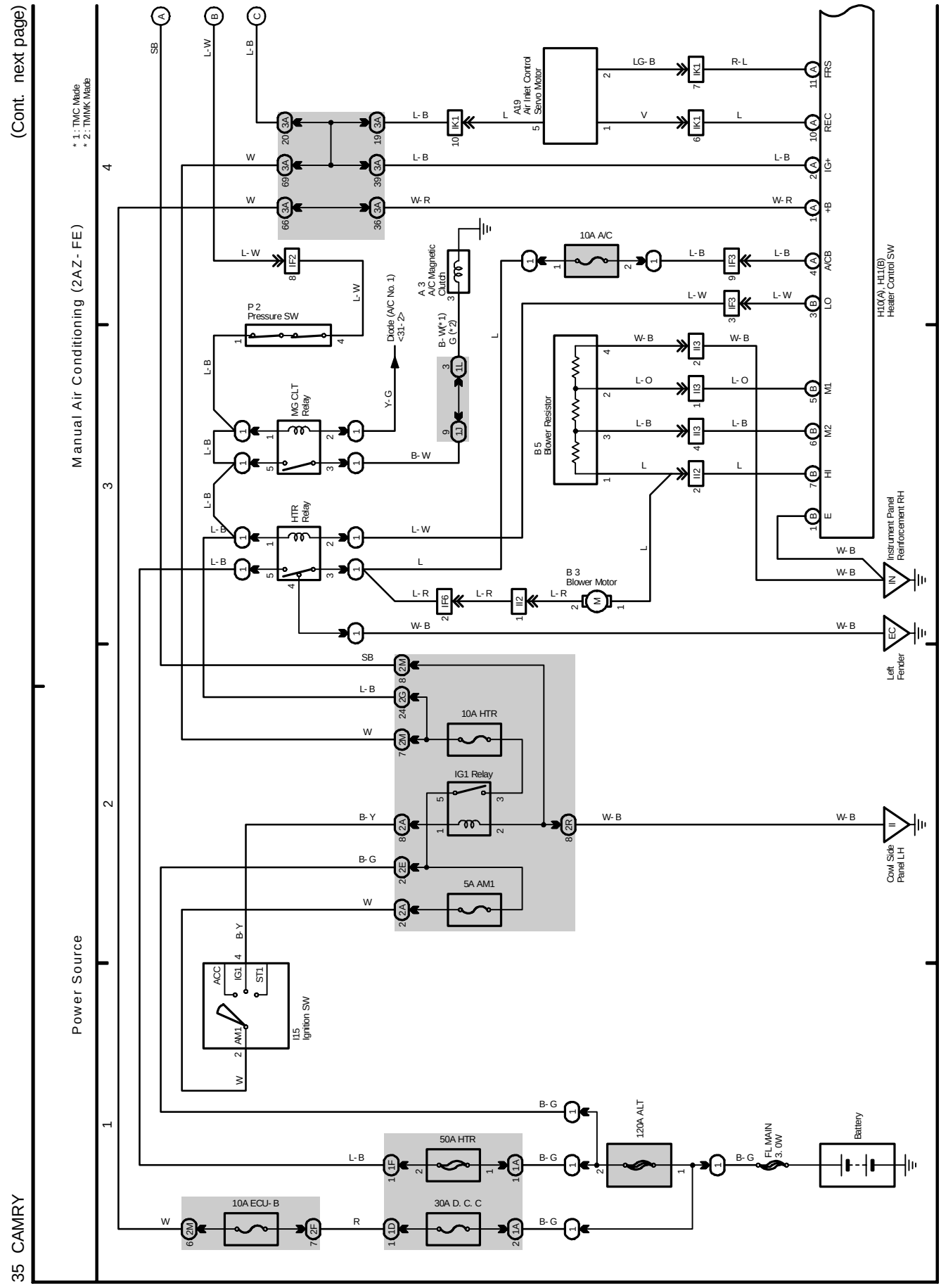

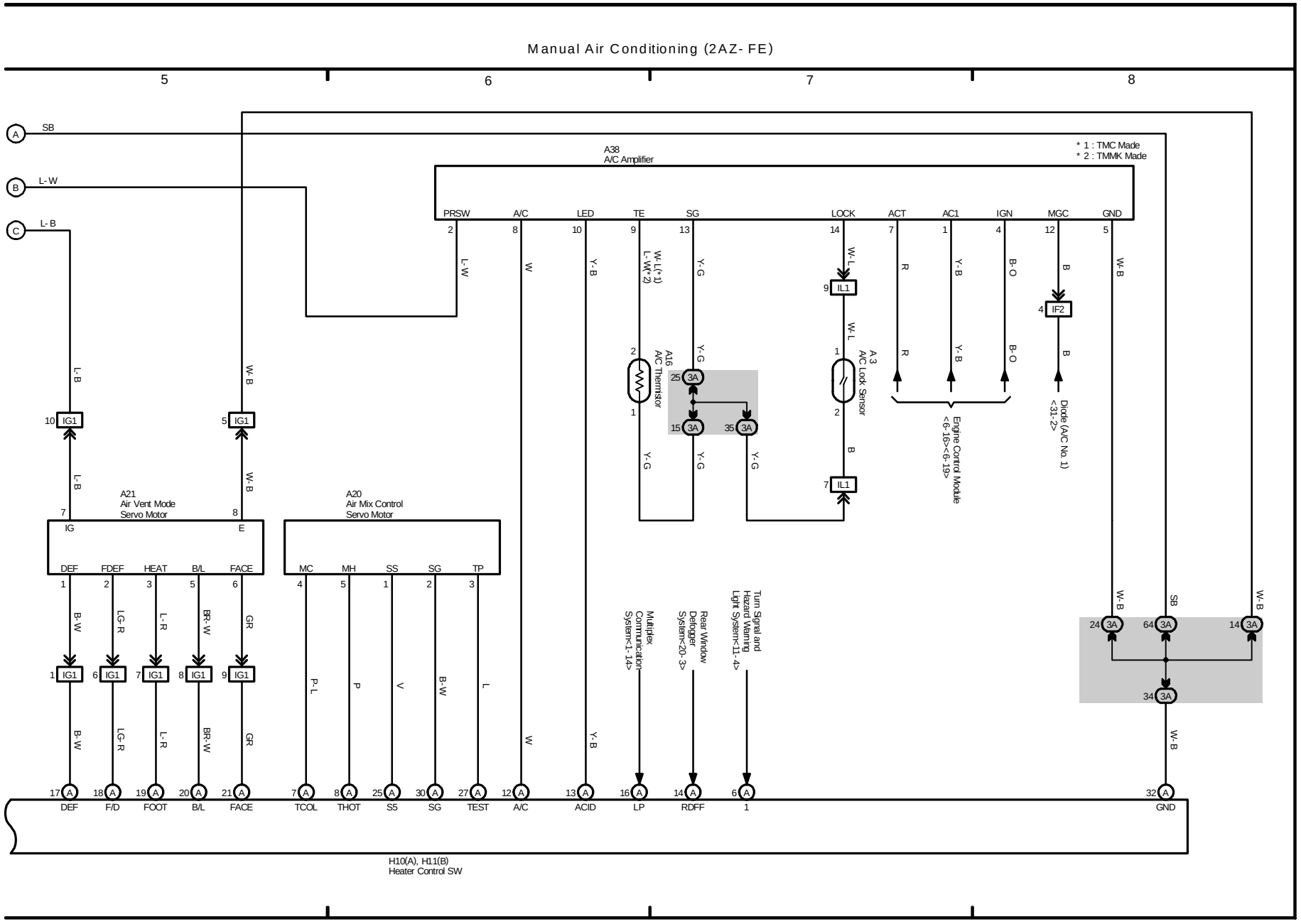
Manual Air Conditioning (2AZ- FE)
5
6
7
8
A
SB
B
L- W
C
L- B
A38
A/C Amplifier
* 1 : TMC Made
* 2 : TMMK Made
PRSW
A/C
LED
TE
SG
LOCK
ACT
AC1
IGN
MGC
GND
L- W
W
Y- B
W- L(*1)
L- W(*2)
Y- G
W- L
R
Y- B
B- O
B
W- B
IL1
IF2
A16
A/C Thermistor
A3
A/C Lock Sensor
Engine Control Module
<6-16><6-19>
Diode (A/C No. 1)
<31-2>
3A
IG1
A21
Air Vent Mode
Servo Motor
IG
E
DEF
FDEF
HEAT
B/L
FACE
B- W
LG- R
L- R
BR- W
GR
A20
Air Mix Control
Servo Motor
MC
MH
SS
SG
TP
P- L
P
V
B- W
L
Multiplex
Communication
System<1- 14>
Rear Window
Defogger
System<20- 3>
Turn Signal and
Hazard Warning
Light System<11- 4>
DEF
F/D
FOOT
B/L
FACE
TCOL
THOT
S5
SG
TEST
A/C
ACID
LP
RDFF
1
GND
H10(A), H11(B)
Heater Control SW